temple

Creating sustainable futures

# Grey Mare Lane

## Arboricultural Impact Assessment

## Report for One Manchester Limited

| Job Number | 10249 | | |
|---|---|---|---|
| Author | Matthew Wilcox MArborA | | |
| Version | Checked by | Approved by | Date |
| V1.0 | Henry Bates (Senior) | Jacqueline Waring (Principal) | 19/10/2023 |

Temple Group Ltd, The Clove Building, 4 Maguire Street, London SE1 2NQ
**T**. 020 7394 3700 **E**. enquiries@templegroup.co.uk **W**. www.templegroup.co.uk

# Contents


| | | |
|---|---|---|
| Executive Summary | | 3 |
| 1 | Introduction | 3 |
| 2 | Methodology | 5 |
| 3 | Results | 8 |
| 4 | Conclusions | 11 |
| References | | 13 |
| Appendix 1: Schedule of Trees | | 14 |
| Appendix 2: Tree Constraints/Protection Plan | | 22 |
| Appendix 3: Glossary of Terms | | 25 |
| Appendix 4: Photographs | | 28 |
| Appendix 5: TP Fencing Spec and Examples of Warning Signage | | 33 |



LIABILITY

Temple has prepared this report for the sole use of the commissioning party in accordance with the agreement under which our services were performed. No warranty, express or implied, is made as to the advice in this report or any other service provided by us. This report may not be relied upon by any other party without the prior written permission of Temple. The content of this report is, at least in part, based upon information provided by others and on the assumption that all relevant information has been provided by those parties from whom it has been requested. Information obtained from any third party has not been independently verified by Temple, unless otherwise stated in the report.

COPYRIGHT

© This report is the copyright of Temple. Any unauthorised reproduction or usage by any person is prohibited. Temple is part of the Temple Group Management group of companies.

# Executive Summary

Temple Ltd was commissioned 11th October 2023 by One Manchester Limited to undertake a ground level survey of trees that could be affected by proposed demolition at Grey Mare Lane Estate, Manchester, and to produce an updated Arboricultural Impact Assessment (AIA) relative to the demolition works. An existing survey was out of date, having been carried out on the 11th and 12th November 2019.

A qualitative assessment of each tree was carried out according to British Standard BS 5837:2012, Trees in Relation to Design, Demolition and Construction– Recommendations.

The main findings of the survey are as follows:

- There were 21 individual trees in and adjacent to the proposed development site each described in Appendix 1 of this report.
- Of the trees surveyed, five individuals were attributed Category A status, 10 individuals were attributed Category B status, and six were attributed Category C status.
- A tree constraints check was carried out with Manchester City Council. It was confirmed none of the trees on site are subject to a Tree Preservation Order and there is no Conservation Area designation covering the site.
- 15 trees (77, 78, 79, 82, 83, 94, 95, 143, 148, 149, 150, 151, 153, 154, and 155) were deemed to be located such that they would not be affected in any way by the demolition works as proposed, and would not therefore require tree protection fencing.
- One Category B tree, T84, will require removal to facilitate demolition.

# 1 Introduction

### SCOPE OF REPORT

1.1 This report has been produced in accordance with British Standard BS 5837:2012 Trees in Relation to Design, Demolition and Construction – Recommendations

(hereafter referred to as BS 5837:2012). It provides information on the current condition of trees at the site, their suitability for retention, and the above and below ground constraints to development. It also evaluates the overall likely impact of the proposed works on the existing tree presence at the site, as well as detailing any special engineering methods required to mitigate such impact.

1.2 Any clear structural flaws or hazards have been identified in the Schedule of Trees provided in Appendix 1. Preliminary recommendations for the management of retained trees are provided, but a full hazard risk assessment comprising a more comprehensive analysis of tree condition and potential risk to target areas is beyond the scope of this report. Any recommendations relating to the management of potentially hazardous trees should be carried out as soon as possible[1].

## SITE CONTEXT AND STATUS

1.3 The site is situated in the Greater Manchester and comprises occupied houses and flats interspersed with several life-expired blocks of flats, three of which are the subject of this application. It is understood that foundations and underground services will not form part of the demolition, and that a hardcore road surface will be created providing access to each block to be demolished.

1.4 Grey Mare Lane lies to the east of the site. The Ordnance Survey National Grid reference for the centre of the site is SJ8690498129.

[1] All tree works should be undertaken by a suitably qualified Arboricultural Contractor. No arboricultural works to trees subject to planning constraints shall be carried out without the written consent of the relevant Local Planning Authority (LPA). Any proposed tree works should be undertaken in accordance with British Standard BS 3998:2010 Treework - Recommendations. Works to trees that are the subject of a Tree Preservation Order or within a Conservation Area which are deemed to be dangerous under Regulation 14 of the Town and Country Planning (England) (Regulations) 2012 may under certain circumstances be undertaken without needing to seek the prior written consent of the LPA.

# 2 Methodology

## TREE SURVEY

2.1 The tree survey was conducted in accordance with BS 5837:2012. Results are presented in the Schedule of Trees (Appendix 1).

2.2 Previous survey data was used as a basis for up-dating tree condition and the tree numbers from the previous survey were maintained. Data collected included: species listed by common name, tree dimensions including overall height, canopy spreads measured against the cardinal compass points, crown height, age class, physiological condition, structural condition, life expectancy, root protection areas and preliminary management advice.

2.3 Each tree has also been assigned a category grade in accordance with BS 5837:2012 categories A, B, C and U ranging from high to low quality. Definitions of tree quality are provided in Table 2 Appendix 1.

2.4 A tree constraints plan, based on the original tree survey data and productions, is presented in Appendix 2 showing the RPAs (root protection areas) for all surveyed trees.

2.5 Each grading category has been highlighted using the colour key system as described in BS 5837:2012.

2.6 The site was visited on 11th October 2023, weather conditions were overcast with regular light rain.

2.7 All trees likely to be affected by works inside the red line boundaries, as well as a number of trees located outside the redline boundaries but judged close enough to proposed works to merit inclusion, were visually assessed using the Visual Tree Assessment Method (VTA) (Mattheck and Breloer, 1994).

2.8 Stem diameters were measured using diameter tape. Canopy spreads were estimated by pacing and where possible, verified using a laser range finder. Height measurements were taken using a laser clinometer where possible. Where this was not possible, tree heights have been estimated.

2.9 Formal assessments of topography, drainage, service conduits and soil conditions including specific laboratory investigations of soil properties (i.e. plasticity index, moisture content, suction pressure) were not undertaken and are beyond the scope of this report.

### DESK STUDY

2.10 A tree constraints check was undertaken with Manchester City Council by email to check for Tree Preservation Order and Conservation Area restrictions to tree works in and adjacent to the site. It was established that none applied to the site.

### SUPPORTING DOCUMENTS

2.11 Drawing Reference: BA-XX-00-DR-A-(01)-000- Site plan – Existing and BA-XX-00-DR-A-Demolition Plan, were provided for the purposes of compiling this report. They included the layout of existing site features and the proposed general arrangements for the site.

2.12 No topographical survey was supplied by the client, so the previous tree survey was used to ensure accuracy.

### PERSONNEL

2.13 This report was produced by Matthew Wilcox BSc (Hons) Dip Arb L4 (ABC) MArborA, who holds the Professional Tree Inspector (LANTRA) qualification. Matthew is an Arboricultural Consultant with over 10 years' experience within various sectors of arboriculture, working as a contractor and for local authorities.

## LIMITATIONS

2.14 Only preliminary recommendations for tree management are provided. A full hazard risk assessment comprising a more comprehensive analysis of tree condition and potential risk to target areas is beyond the scope of this report.

2.15 CDM Designer Responsibilities: Our reports may include outline strategies or 'design advice' to support development proposals but, unless explicitly stated above, these are not to be construed as detailed designs under CDM regs. We do not assess the health and safety aspects of design advice which is the duty of designated designers under CDM. Designers' duties under CDM 2015 apply as soon as designs which may be included in construction work are started; hence this may include design concepts, options and outline designs. Our responsibility is to ensure relevant information about our input is made available to other duty holders (under CDM 2015) who will be undertaking the design, including any health & safety assessments, or implementing the design.

2.16 The trees were inspected at ground level and no decay detection equipment was used. There is therefore a risk that any internal decay that may be present has gone undetected.

2.17 Of the trees surveyed, a total of six trees (T84, T95, T151, T153, T154 and T155) were situated in areas where access to the main stem was not possible. As such, assumptions have been made relating to dimensions of the main stem, and the overall condition is based upon the visible parts of the tree only.

2.18 Trees are living organisms and their health and condition change with time. Therefore, this assessment remains valid for 12 months from the date of inspection, or until a severe storm is experienced, after which time a new inspection is required. For the purposes of this report, a severe storm is defined as a period of violent weather, involving rain, hail, wind, snow, lightning or any combination of these, likely to cause damage to trees.

2.19 This AIA includes only the demolition of the existing buildings, in the areas indicated on drawings supplied by the client. It does not encompass any construction work; it is understood that a second planning application associated with construction proposals will be submitted once design plans are finalised.

# 3 Results

### TREE SURVEY

3.1 The results of the updated tree survey are provided in the Schedule of Trees in Appendix 1. A Tree Constraints/Protection Plan illustrating the BS 5837:2012 categories of each tree, their crown spreads, and RPAs is presented in Appendix 2 and photographs of the site are provided in Appendix 5.

3.2 The survey recorded 21 individual trees which could potentially be affected by future development. Species recorded included: common ash *Fraxinus excelsior*, birch *Betula pendular*, common lime *Tilia x europaea*, horse chestnut *Aesculus hippocastanum*, Norway maple *Acer platanoides*, swedish whitebeam *Sorbus intermedia*, sycamore Acer Pseudoplatanus, wild cherry *Prunus avium*.

3.3 Physiological and structural condition[2] of the majority of surveyed trees was consistent with Category B status (10 individuals), with five individuals assigned Category A status and six individuals assigned Category C status.

3.4 Of the trees surveyed, seven were classified as semi mature, four individuals were classified as young, seven individuals were classified as early mature, and three individuals were classified as mature.

3.5 A summary of the number of trees surveyed corresponding to BS 5837:2012 tree quality assessment definitions is provided in Table 1.

[2] Physiological and structural condition are terms used to differentiate between a trees physiological condition i.e. annual growth, vigour, presence of disease etc. as opposed to structural condition relating to branch formation, mechanical strength and integrity.

**Table 1:** Grade Classifications

| BS 5837:2012 Grades A to U | Trees attributed to each grade | Frequency | |
|---|---|---|---|
| | | T | G |
| A | T78, T79, T83, T94, T135 | 5 | - |
| B | T77, T84, T95, T126, T130, T136, T143, T153, T154, T182 | 10 | - |
| C | T148, T149, T150, T151, T152, T155 | 6 | - |
| U | - | - | - |

## DESK STUDY

3.6 It was confirmed that none of the trees one site are subject to a Tree Preservation Order and no Conservation Area designation covers the site.

## ARBORICULTURAL IMPACT ASSESSMENT

3.7 Based on Drawing Reference: BA-XX-00-DR-A-(01)-000- Site plan – Existing and BA-XX-00-DR-A-Demolition Plan, the impact of proposed demolition on the existing trees has been assessed and all trees that will potentially be affected by the works are listed in Table 2. Tree numbers in the table correspond to the Schedule of Trees in Appendix 1 and Tree Constraints/Protection Plan described in Appendix 2.

3.8 Demolition should be undertaken in line with the recommendations of BS 5837: 2012 section 7.3.4 "*Where trees stand adjacent to structures to be removed, the demolition should be undertaken inwards within the footprint of the existing building (often referred to as "top down, pull back*)".

3.9 It has been assumed that the height of all construction traffic or goods vehicles accessing the site will be within the standard minimum carriageway clearance of 5m (HSE, 2017).

**Table 2:** Summary of trees affected by the development

| Impact | Reason | BS Cat A | BS Cat B | BS Cat C | BS Cat U |
|---|---|---|---|---|---|
| **Trees to be removed** | Arboricultural best practice | - | - | - | - |
| | To facilitate demolition | - | T84 | - | - |

TREE REMOVAL AND PRUNING

3.10 One tree, T84 (category B) will require removal to facilitate development as proposed.

3.11 Trees T126, T130, T135 and T136 may require pruning from buildings by up to 2-3m in order to allow safe working space.

3.12 If pruning is deemed necessary, the amount of material removed, and the diameter of the final pruning cut, should be the minimum required for the purpose. Branches should be shortened rather than removed where appropriate. The final pruning cut should be positioned above an active bud or side branch.

3.13 All works must give due consideration to potential presence of protected species, including breeding birds, and roosting bats.

3.14 Arisings from tree works (e.g. wood piles and standing deadwood trunks) can provide valuable habitat for wildlife. As such, consideration should be given to their retention on site in areas unlikely to cause issues to public health and safety.

3.15 All tree pruning must be carefully planned and undertaken in accordance with BS 3998: 2010 Tree Work – Recommendations.

### IMPACT ON VISUAL AMENITY AND LOCAL CHARACTER

3.16 Tree T84 was attributed Category B status and therefore considered to be of moderate amenity value. It is anticipated that a landscaping and replanting plan will be produced in association with any future redevelopment of the site as a whole. It is recommended that this should be extensive enough to compensate adequately for tree losses.

3.17 The tree protection strategy as set out in this document will ensure protection of the trees to be retained on the site during demolition works.

# 4 Conclusions

### TREE RETENTION AND PROTECTION

4.1 A single tree B category tree (T84) is proposed for removal in association with demolition works as currently proposed. The loss of this tree can be adequately compensated for within a future landscaping and replanting plan associated with redevelopment of the site as a whole.

4.2 The Tree Protection Plan (TPP), based on the erection of robust tree protection fencing prior to commencement of any works on site (including enabling works, soil stripping or other site preparation operations) will ensure the roots of retained trees are protected from damage.

4.3 It is therefore concluded that overall tree impact associated with the demolition works as proposed is low.

## CONTACT DETAILS

4.4 This Arboricultural Impact assessment is accompanied by a list of known contact details for all relevant parties and is included in Table 4.

**Table 4**: List of contact details for all relevant parties

| Contact | Name | Company or Local Authority name | Contact Number | Report Issued Yes/No |
|---|---|---|---|---|
| **Client** | Lynne Pearson | One Manchester Limited | - | Yes |
| **Arboricultural Consultant** | Matthew Wilcox | Temple Ltd | 07484 539005 | Yes |

# References

British Standard Institute (BSI) (2012). *BS 5837:2012 Trees in Relation to Design Demolition and Construction-Recommendations*. BSI, London.

British Standard Institute (BSI) (2010). *BS 3998:2010 Recommendation for Tree Works*. BSI, London.

British Standard Institute (BSI) (2014). *BS 8545:2014 Trees: from nursery to independence in the landscape - Recommendations*. BSI, London.

Department for Communities and Local Government (2014). *Planning Practice Guidance on Tree Preservation Orders and trees in conservation areas.*

Lonsdale, D. (1999). *Research for Amenity Trees No.7: Principles of Tree Hazard Assessment and Management*. HMSO

Mattheck and Breloer (1994). HMSO London. Research for Amenity Trees No 4; *The Body Language of Trees.*

No name (No date) BA-XX-00-DR-A-(01)-000- Site plane – Existing

No name (No date) BA-XX-00-DR-A-Demolition Plan

Spatial Dimensions (2021) *Topographical Survey 21144_01.*

Town and Country Planning Act 1990 (as amended).

Town and Country Planning (Tree Preservation) (England) Regulations 2012.

# Appendix 1: Schedule of Trees

**Table 1:** Schedule of Trees and Tree Quality Assessment*

* See Table 3 for key to terms
** See Table 2 for definitions of categories

| No | Species | Ht. | S | St. 1.5m | Canopy Spread | | | | Cr. Cl | Ls | SC | PC | Comments /Observation | Preliminary Management Advice | LE | Cat ** | RPAm² | RPA r |
|---|---|---|---|---|---|---|---|---|---|---|---|---|---|---|---|---|---|---|
| | | | | | N | S | E | W | | | | | | | | | | |
| T1 – T77 | | | | | | | | | | | | | Not part of survey revision. | | | | | |
| T77 | Birch | 10 | 1 | 340 | 5 | 5 | 5 | 5 | 1 | EM | Good | Good | On grass bank. | None. | 20+ years | B2 | 52.3 | 4.1 |
| T78 | Common lime | 10 | 1 | 490 | 5 | 5 | 5 | 5 | 2 | EM | Good | Good | Epicormic growth at base. In planting pit in paved area. | None. | 20+ years | A2 | 108.6 | 5.9 |
| T79 | Common lime | 10 | 1 | 440 | 5 | 5 | 5 | 5 | 2 | EM | Good | Good | Epicormic growth and elder at base. In planting pit in paved area. | None. | 20+ years | A2 | 87.6 | 5.3 |
| T80 – T81 | | | | | | | | | | | | | Not part of survey. | | | | | |
| T82 | Birch | 10 | 1 | 328 | 3.5 | 3.5 | 3.5 | 2.5 | 2 | SM | Good | Good | Exposed roots, slight lean to the east. | None. | 20+ years | B2 | 48.7 | 3.9 |
| T83 | Sycamore | 12 | 1 | 450 | 4.5 | 4.5 | 2.5 | 4.5 | 1.5 | EM | Good | Good | Crown close to adjacent building. Suppressed on one side by adjacent tree. | None. | 40+ years | A2 | 91.6 | 5.4 |
| T84 | Cherry | 12 | 1 | 370 | 3 | 3 | 3 | 3 | 1 | EM | Fair | Fair | Unable to access, estimated. Encroaching on adjacent building. | None. | 20+ years | B2 | 61.9 | 4.4 |

**Table 1:** Schedule of Trees and Tree Quality Assessment*

* See Table 3 for key to terms
** See Table 2 for definitions of categories

| No | Species | Ht. | S | St. 1.5m | Canopy Spread | | | | Cr. Cl | Ls | SC | PC | Comments /Observation | Preliminary Management Advice | LE | Cat ** | RPAm² | RPA r |
|---|---|---|---|---|---|---|---|---|---|---|---|---|---|---|---|---|---|---|
| | | | | | N | S | E | W | | | | | | | | | | |
| T85 – T93 | | | | | | | | | | | | | Not part of survey. | | | | | |
| T94 | Horse chestnut | 11 | 1 | 430 | 3 | 3 | 3 | 3 | 1 | EM | Good | Good | Two wounds on west side of stem, good reaction wood present. | None. | 40+ years | A2 | 83.6 | 5.2 |
| T95 | Apple | 4 | 1 | 210 | 2 | 2 | 2 | 2 | 1 | SM | Fair | Fair | Unable to access, estimated. | None. | 20+ years | B2 | 20 | 2.5 |
| T96 – T125 | | | | | | | | | | | | | Not part of survey. | | | | | |
| T126 | Ash | 13 | 1 | 520 | 4 | 6 | 6 | 6 | 2 | SM | Good | Fair | Exposed roots close to stem base. Minor deadwood and a small amount of epicormic growth in the inner crown. A sign of potential early onset Ash dieback. | Monitor yearly in summer for Ash Dieback. | 20+ years | B2 | 122.3 | 6.2 |
| T127 – T129 | | | | | | | | | | | | | Not part of survey. | | | | | |
| T130 | Swedish whitebeam | 5 | 1 | 330 | 3 | 3 | 3 | 2.5 | 1.5 | SM | Good | Good | Crown Close to adjacent building and lamp post. Maiden form. | None. | 20+ years | B2 | 49.3 | 4 |

**Table 1:** Schedule of Trees and Tree Quality Assessment*

* See Table 3 for key to terms
** See Table 2 for definitions of categories

| No | Species | Ht. | S | St. 1.5m | Canopy Spread | | | | Cr. Cl | Ls | SC | PC | Comments /Observation | Preliminary Management Advice | LE | Cat ** | RPAm² | RPA r |
|---|---|---|---|---|---|---|---|---|---|---|---|---|---|---|---|---|---|---|
| | | | | | N | S | E | W | | | | | | | | | | |
| T131 - T134 | | | | | | | | | | | | | Not part of survey. | | | | | |
| T135 | Sycamore | 12 | 1 | 590 | 5.5 | 3.5 | 5.5 | 5.5 | 4 | EM | Good | Good | The tree has been crown lifted recently, pruning wounds have not occluded, otherwise maiden form. | None. | 40+ years | A2 | 157.5 | 7.1 |
| T136 | Swedish whitebeam | 7 | 1 | 510 | 2.5 | 3 | 3 | 3 | 1 | SM | Good | Good | Maiden form. | None. | 20+ years | B2 | 117.7 | 6.1 |
| T137 – T142 | | | | | | | | | | | | | Not part of survey. | | | | | |
| T143 | Birch | 11 | 1 | 430 | 3.5 | 3.5 | 3.5 | 3.5 | 2 | SM | Good | Good | Adjacent to the demolition site. | None. | 20+ years | B2 | 83.6 | 5.2 |
| T144 – T145 | | | | | | | | | | | | | Not part of Survey. | | | | | |
| T148 | Norway maple | 3 | 1 | 80 | 0.5 | 0.5 | 0.5 | 0.5 | 0 | Y | Good | Good | Newly planted in tree pit. | None. | 10+ years | C1 | 2.9 | 1 |
| T149 | Norway Maple | 3 | 1 | 80 | 0.5 | 0.5 | 0.5 | 0.5 | 0 | Y | Good | Good | Newly planted in tree pit. | None. | 10+ years | C1 | 2.9 | 1 |
| T150 | Norway maple | 3 | 1 | 80 | 0.5 | 0.5 | 0.5 | 0.5 | 0 | Y | Good | Good | Newly planted in tree pit. | None. | 10+ years | C1 | 2.9 | 1 |

**Table 1:** Schedule of Trees and Tree Quality Assessment*

* See Table 3 for key to terms
** See Table 2 for definitions of categories

| No | Species | Ht. | S | St. 1.5m | Canopy Spread | | | | Cr. Cl | Ls | SC | PC | Comments /Observation | Preliminary Management Advice | LE | Cat ** | RPAm² | RPA r |
|---|---|---|---|---|---|---|---|---|---|---|---|---|---|---|---|---|---|---|
| | | | | | N | S | E | W | | | | | | | | | | |
| T151 | Apple | 2 | 1 | 210 | 1 | 1 | 1 | 1 | 0 | M | Fair | Fair | Unable to access, estimated. | None. | 10+ years | C1 | 20 | 2.5 |
| T152 | Birch | 4 | 1 | 100 | 1 | 1 | 1 | 1 | 0 | Y | Fair | Fair | Self-set birch grown through fence. | None. | 10+ years | C1 | 4.5 | 1.2 |
| T153 | Apple | 9 | 1 | 300 | 3 | 3 | 3 | 3 | 0 | M | Fair | Fair | Unable to access, estimated. | None | 20+ years | B2 | 40.7 | 3.6 |
| T154 | Apple | 9 | 1 | 300 | 3 | 3 | 3 | 3 | 0 | M | Fair | Fair | Unable to access, estimated. | None | 20+ years | B2 | 40.7 | 3.6 |
| T155 | Apple | 4 | 1 | 210 | 2 | 2 | 2 | 2 | 1 | SM | Fair | Fair | Unable to access, estimated. Covered in creeper. | None | 10+ years | C1 | 20 | 2.5 |

## **Table 2:** BS: 5837 2012 Tree Quality Assessment Definitions

| TREES FOR REMOVAL | | |
|---|---|---|
| **Category & Definition** | **Criteria** | **Identification on Plan** |
| **Category U**<br>Those in such a condition that they cannot realistically be retained as a living tree in the context of the current land use for longer than 10 years. | • Trees that have a serious, irremediable structural defect such that their early loss is expected due to collapse, including those that will become unviable after removal of other U category trees (i.e. Where for whatever reason the loss of companion shelter cannot be mitigated by pruning)<br>• Trees that are dead or are showing signs of significant immediate or irreversible overall decline.<br>• Trees infected with pathogens of significance to the health and or safety of other trees nearby by or very low quality trees suppressing adjacent trees of better quality. | RED |

| TREES TO BE CONSIDERED FOR RETENTION | | | | |
|---|---|---|---|---|
| **Category & Identification** | **1 Mainly arboricultural values** | **2 Mainly landscape values** | **3 Mainly cultural values including conservation** | **Identification on plan** |
| **Category A**<br>Trees of High Quality with an estimated remaining life expectancy of at least 40 years | Trees that are a particularly good example of their species, especially if rare or unusual, or essential components of groups or of formal or semi-formal arboricultural features e.g. the dominant and/or principal trees in an avenue) | Tree groups or woodlands of particular visual importance as arboricultural and/or landscape features. | Tree groups or woodlands of significant conservation historical, commemorative or other value (e.g. veteran trees or wood pasture) | GREEN |
| **Category B**<br>Trees of moderate quality with an estimated remaining life expectancy of at least 20 years. | Trees that might be included in the high category but are downgraded because of impaired condition (e.g. presence of remediable defects including unsympathetic past management and minor storm damage). | Trees present in numbers, usually as groups or woodlands such that they attract a higher collective rating than they might as individuals: or trees occurring as collectives but situated so as to make little visual contribution to the wider locality. | Trees with material conservation or other cultural benefits. | BLUE |

| TREES TO BE CONSIDERED FOR RETENTION | | | | |
|---|---|---|---|---|
| **Category & Identification** | **1 Mainly arboricultural values** | **2 Mainly landscape values** | **3 Mainly cultural values including conservation** | **Identification on plan** |
| **Category C**<br>Trees of a low quality with an estimated remaining life expectancy of at least 10 years or young trees with a stem diameter below 150mm | Unremarkable trees of very limited merit or such impaired condition that they do not qualify in higher categories. | Trees present in groups or woodlands but without this conferring on them significantly greater landscape value and/or trees offering low or only temporary/transient landscape benefits. | Trees with no material conservation or other cultural benefits. | GREY |

**Table 3:** Key Schedule of Trees

| Column Heading | Explanation |
|---|---|
| **Tree No** | Sequential number corresponding to number on plan. |
| **Species** | English names. |
| **Ht.** | Height in metres. |
| **S** | Number of main stems. |
| **St. 1.5 (Stem Diameter)** | Stem diameter when measured in accordance with Annex C of BS 5837:2012. |
| **NSEW** | Crown radius in metres to cardinal points of the compass. |
| **Cr. Cl. (Crown Clearance)** | Height in metres between the ground and underside of canopy. |
| **Ls.** | Life stage definitions. Y= Young. SM = Semi-mature. EM = Early mature. M = Mature. OM = Over mature. |
| **SC** | Brief description of structural condition. |
| **PC** | Brief description of physiological condition. |
| **Preliminary Advice** | Preliminary tree works advice and recommendations. |
| **LE** | Estimated remaining useful life contribution in years. <10, 10+, 20+ and 40+ yr. |
| **Cat. (Category)** | Categorisation grading in accordance with BS 5837 2012.<br><br>Trees suitable for retention: - Category A trees of high quality and amenity value. Category B trees of moderate quality and amenity value. Category C trees of low quality or amenity value.<br><br>British Standards BS 5837:2012 recommends that these categories may be further broken down into sub-categories A1 A2 A3 pertaining to Arboricultural, Landscape or Cultural values respectively. |
| **RPA $m^2$** | Root Protection Area (RPA). Indicative area around a tree measured in $m^2$ and calculated in accordance with Annex C of BS 5837:2012 deemed to contain sufficient rooting volume to maintain the viability of a tree and where the protection of roots and soil structure is treated as a priority. |
| **RPA *r*** | Root Protection Area (RPA) radius calculation centred on the base of the tree and calculated in accordance with Annex C of BS 5837:2012 |

# Appendix 2: Tree Constraints/Protection Plan

temple

Creating sustainable futures

| | |
|---|---|
| Job title | Grey Mare Lane<br>Job 10246 |
| Client | One Manchester Ltd |
| Map title | Tree Constraints Plan |
| Scale (at A2) | 1:500 |
| Date of survey | 11/10/2023 |
| Surveyor | Matthew Wilcox |

| Drawn | Approved | Date |
|---|---|---|
| CJH | JW | 17/10/2023 |

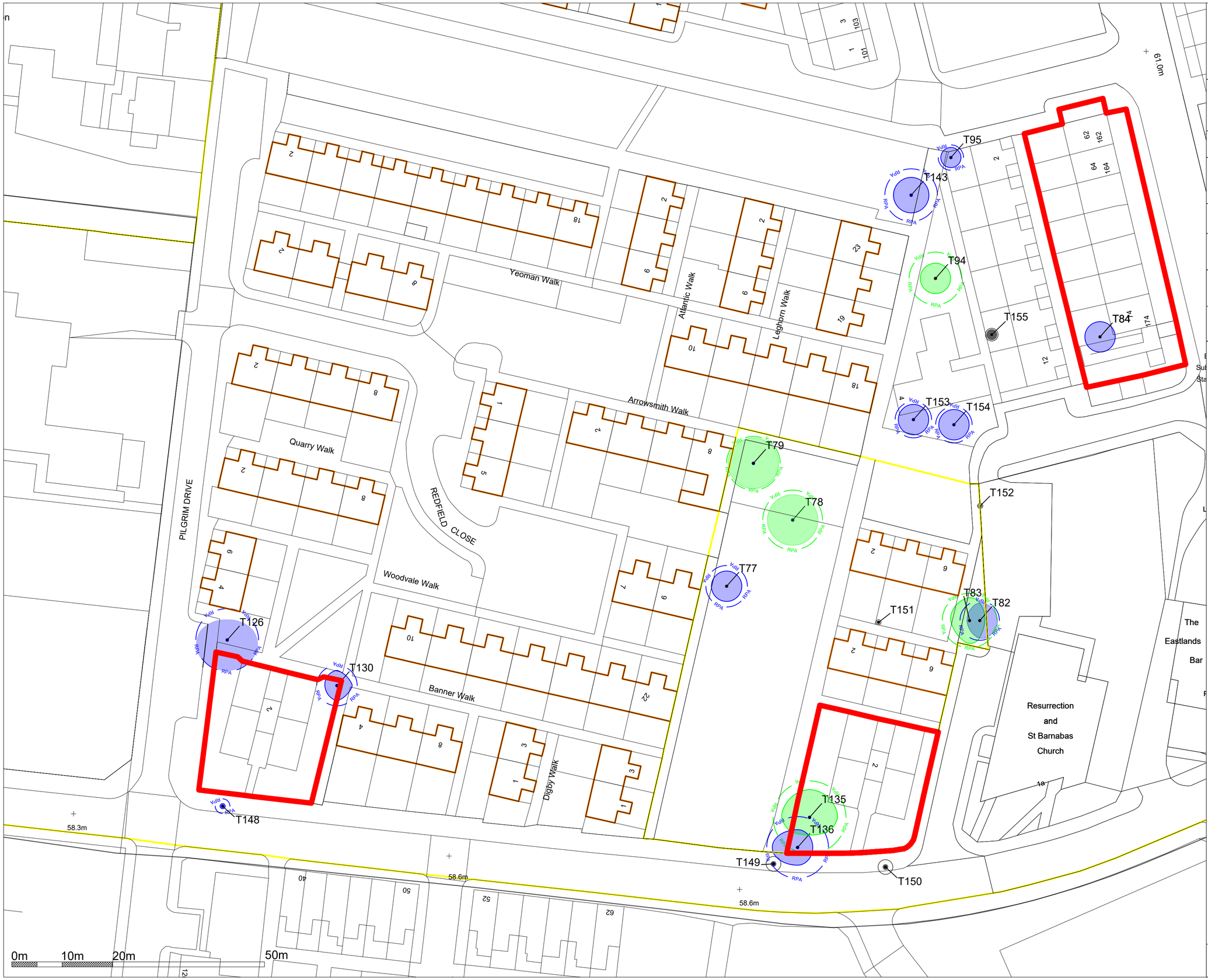


## Legend

- Crown spread of category A - Trees with high quality and value
- Crown spread of category B - Trees with high quality and value
- Crown spread of category C - Trees with high quality and value
- RPA — Root Protection Area (RPA) of Category A Trees
- RPA — Root Protection Area (RPA) of Category B Trees
- RPA — Root Protection Area (RPA) of Category C Trees
- Site Boundary

This plan is provided solely for the purpose of supporting the description of the arboricultural features of the site as contained in the accompanying report

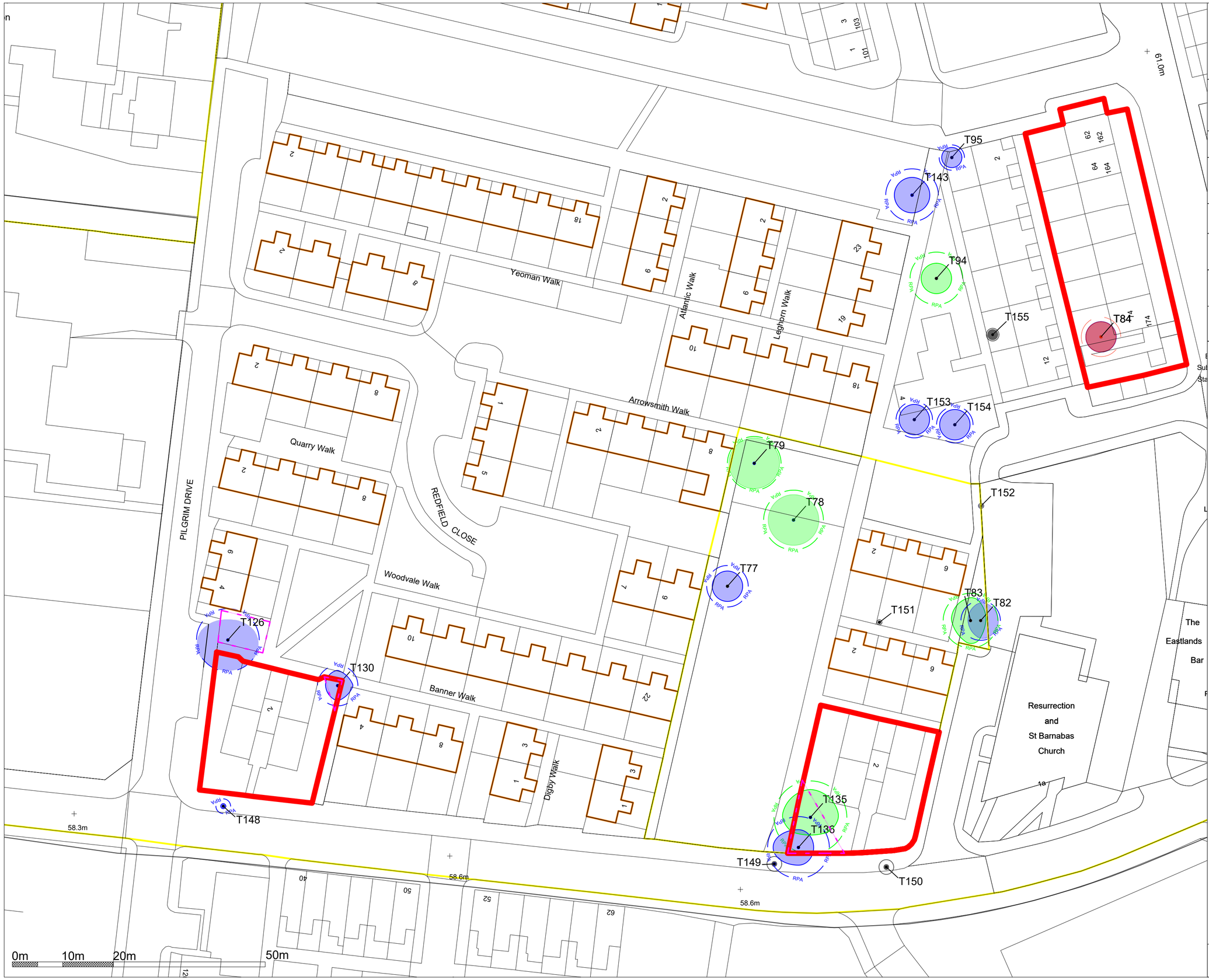


temple

Creating sustainable futures

| | |
|---|---|
| Job title | Grey Mare Lane<br>Job 10246 |
| Client | One Manchester Ltd |
| Map title | Tree Protection Plan |
| Scale (at A2) | 1:500 |
| Date of survey | 11/10/2023 |
| Surveyor | Matthew Wilcox |

| Drawn | Approved | Date |
|---|---|---|
| CJH | JW | 17/10/2023 |

## Legend

- Crown spread of category A - Trees with high quality and value
- Crown spread of category B - Trees with high quality and value
- Crown spread of category C - Trees with high quality and value
- RPA — Root Protection Area (RPA) of Category A Trees
- RPA — Root Protection Area (RPA) of Category B Trees
- RPA — Root Protection Area (RPA) of Category C Trees
- Protective Fencing — BS5837:2012 Tree Protection Fencing
- Trees to be removed
- Demolition Boundary

N

This plan is provided solely for the purpose of supporting the description of the arboricultural features of the site as contained in the accompanying report

# Appendix 3: Glossary of Terms

## Glossary of Terms

| Term | Explanation |
|---|---|
| **Arboricultural impact assessment and method statement (AIA)** | Evaluation of direct and indirect effects of a proposed design and/or construction. |
| **Arboricultural Method Statement (AMS)** | Methodology for the implementation of any aspect of development that is in the root protection area or has the potential to result in the loss of or damage to a tree to be retained. |
| **Branch structure** | Qualitative description of formation of main framework of limbs and branches. |
| **Canopy face** | Orientation of canopy relative to cardinal points of the compass |
| **Canopy radius** | A measurement taken from the centre of a tree to the furthest radial extension of tree canopy relative to the cardinal points of the compass. |
| **Competent Person** | Person who has training and experience relevant to the matter being addressed and an understanding of the requirements of the particular task being approached. |
| **Conservation Area** | Local Planning Authority special designation generally prohibiting tree works without 6 weeks prior written notification. |
| **Construction Exclusion Zone (CEZ)** | Area based upon the calculated root protection area prohibiting access. |
| **Cavity** | Open and exposed aperture where wood tissue has internally degraded. |
| **Constraints check** | Formal search of local authority records to determine legal and statutory constraints on tree works. |
| **Crown lifting** | Removal of lower branches to achieve a stated vertical clearance above ground level or other surface. |
| **Crown reduction** | Pruning of a trees canopy in both height and width. |
| **Decay** | Deterioration and breakdown of tree wood fibres resulting in structural and/or physiological dysfunction of a tree. |
| **Dieback** | Continual decline and death of wood tissue including twigs and branches. |
| **Epicormic growth** | Growth that emerges from dormant buds along the trunk and branches of a tree. |
| **Failure** | Description of structural failure or wood fibres including fracture of branches, limbs and main stems. |
| **Fork** | Area or point of union between one or more limbs or branches. |

## Glossary of Terms

| Term | Explanation |
|---|---|
| **Hazard Risk Assessment** | Qualitative and quantitative appraisal of the potential for tree failure and the possible risk of harm or damage to persons or property. |
| **Local Planning Authority** | Body responsible for the administration of Statutory duties relating to Development Management. |
| **Multi-stem** | A single tree formed from 2 or more codominant main stems |
| **Occlusion** | Wood development enclosing an extant wound or pruning cut. |
| **Pruning** | The targeted removal of branches or limbs using saws or other tools. |
| **Physiological Condition** | Observation relating to a trees physiology for example vigour, leaf area, growth rate, the presence of pests or disease. |
| **Root Protection Area** | Root Protection Area (RPA). Indicative area around a tree deemed to contain sufficient rooting volume to maintain the viability of a tree. |
| **Shelter belt** | A wind break normally made up of one or more trees planted in such a way to provide cover from the wind. |
| **Structural Condition** | Observation relating to a trees structural integrity and the presence of any physical defects. |
| **Suppressed** | Where a trees development has been influenced or effected by the presence of competing vegetation. |
| **Tree Constraints Plan** | A scaled plan indicating above and below ground constraints relating to the protection of trees |
| **Tree Preservation Order** | A legal order made by the local planning authority protecting specific trees in the interests of amenity. |
| **Visual Tree Assessment (VTA)** | A method of assessment based upon the research developed to recognise dynamic responses of a tree to its surroundings. |
| **'V' Shaped Branch Union** | The union point between two branches that have grown at a tight angle, forming the 'V' shape. This structure is inherently weaker than the 'U' shaped union. |
| **'U' Shaped Branch Union** | The union point between two branches that have grown at a wider angle, forming the 'U' shape. This structure is considered to be the strongest and most optimised shape that a union can form. |

# Appendix 4: Photographs

| | | |
|---|---|---|
| **Photograph 1**<br>View looking towards T78. | | |
| **Photograph 2**<br>View looking towards T82 and T83. | | |

| | | |
|---|---|---|
| **Photograph 3**<br>View looking towards T94. | | |
| **Photograph 4**<br>View looking towards T126. | | |

| | | |
|---|---|---|
| **Photograph 5**<br>View looking towards T130. | | |
| **Photograph 6**<br>View looking towards T135 and T136. | | |

| | | |
|---|---|---|
| **Photograph 7**<br>View looking towards T143. | | |

# Appendix 5: Tree Protection Fencing Specification and Examples of Warning Signage

Figure 2 **Default specification for protective barrier**

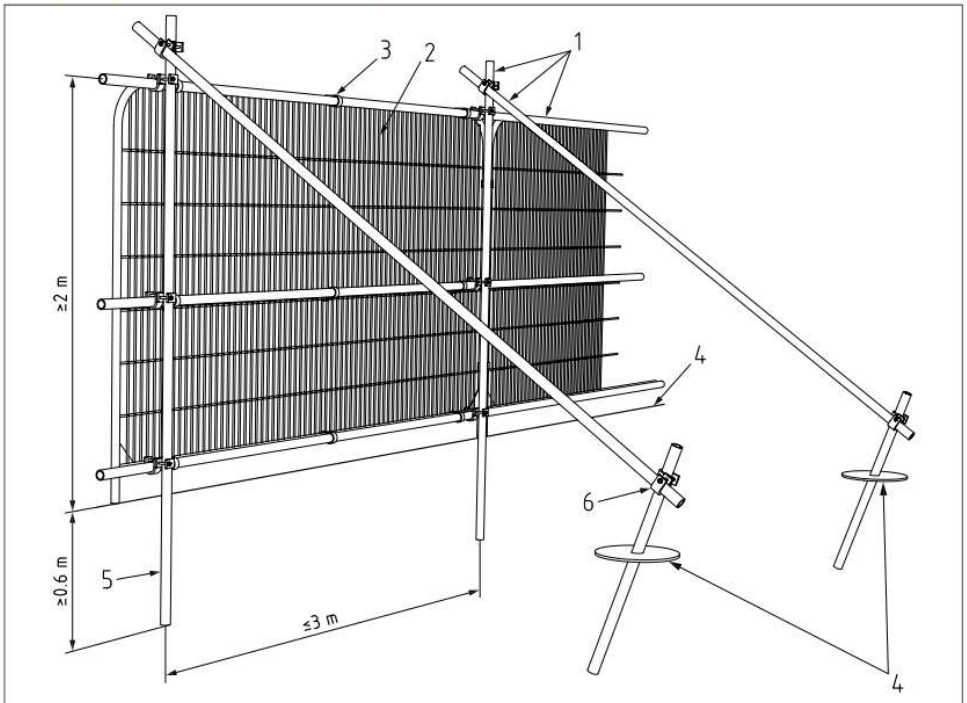


**Key**

1 Standard scaffold poles
2 Heavy gauge 2 m tall galvanized tube and welded mesh infill panels
3 Panels secured to uprights and cross-members with wire ties
4 Ground level
5 Uprights driven into the ground until secure (minimum depth 0.6 m)
6 Standard scaffold clamps