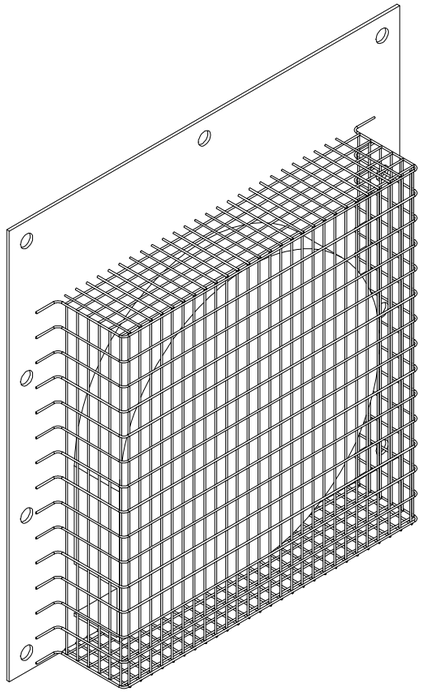

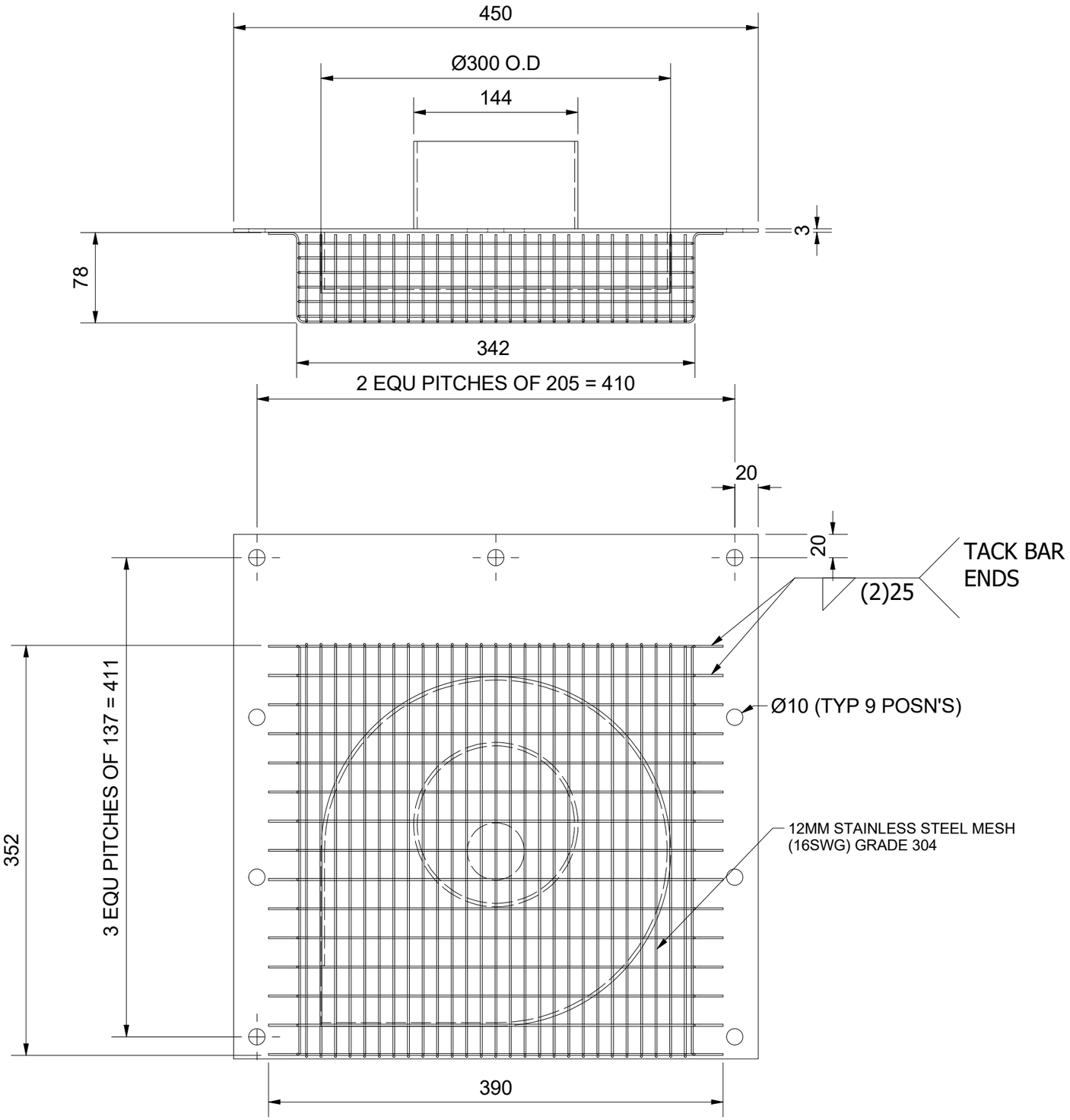

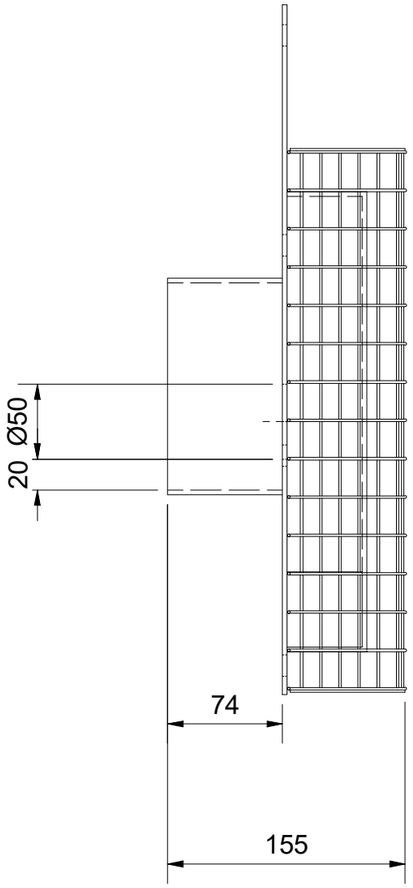

PROJECTION

COMMENTS:

1. THIS DRAWING SHALL BE READ IN CONJUNCTION WITH ALL RELEVANT GENERAL ARRANGEMENT AND DETAIL DRAWINGS.

2. ALL COMPONENTS SHALL BE MANUFACTURED IN ACCORDANCE WITH THE PRODUCTION SPECIFICATION HRD-FM09/15

3. HYDRO-BRAKE OPTIMUM UNIT PROVIDED WITHOUT BYPASS

REVISION HISTORY

REV	BY	DESCRIPTION	DATE
A	SK	FIRST RELEASE	12 APR 19

DATE:	SCALE:
21 FEB 19	1:4

DRAWN BY:	CHECKED BY:	APPROVED BY
SK	WCJ	MB

Title
HYDRO INTERNATIONAL
HYDRO-BRAKE OPTIMUM®

SHE-0050 WITH MESH GUARD

DETAIL DRAWING

Hydro International®

Shearwater House
Victoria Road
Clevedon, UK
BS21 7RD
Tel: +44 (0)1275 878371
Fax: +44 (0)1275 874979
hydro-int.com

ANY WARRANTY GIVEN BY HYDRO INTERNATIONAL WILL APPLY ONLY TO THOSE ITEMS SUPPLIED BY IT. ACCORDINGLY HYDRO INTERNATIONAL CANNOT ACCEPT ANY RESPONSIBILITY FOR ANY STRUCTURE, PLANT, OR EQUIPMENT, (OR THE PERFORMANCE THERE OF) DESIGNED, BUILT, MANUFACTURED, OR SUPPLIED BY ANY THIRD PARTY. HYDRO INTERNATIONAL HAVE A POLICY OF CONTINUOUS DEVELOPMENT AND RESERVE THE RIGHT TO AMEND THE SPECIFICATION. HYDRO INTERNATIONAL CANNOT ACCEPT LIABILITY FOR PERFORMANCE OF ITS EQUIPMENT, (OR ANY PART THEREOF), IF THE EQUIPMENT IS SUBJECT TO CONDITIONS OUTSIDE ANY DESIGN SPECIFICATION. HYDRO INTERNATIONAL OWNS THE COPYRIGHT OF THIS DRAWING, WHICH IS SUPPLIED IN CONFIDENCE. IT MUST NOT BE USED FOR ANY PURPOSE OTHER THAN THAT FOR WHICH IT IS SUPPLIED AND MUST NOT BE REPRODUCED, IN WHOLE OR IN PART, WITHOUT PRIOR PERMISSION IN WRITING FROM HYDRO INTERNATIONAL.
©2019 HYDRO INTERNATIONAL

DO NOT SCALE DRAWING

UNLESS OTHERWISE SPECIFIED, DIMENSIONS ARE IN MILLIMETERS.

TOLERENCES ARE:
± 1 MM UNLESS SHOWN OTHERWISE

ANGLES: ± .5°

WEIGHT:	MATERIAL:
10KG	STAINLESS STEEL

NEXT ASSEMBLY:
PQT9120.1000

DRAWING NO.:
D 0050

SHEET SIZE:	SHEET:	Rev:
1 of 1	2 OF 2	A