Highway Safety Report

Proposed Digital Advertising Scheme at Deansgate Interchange Junction, Manchester

Ocean Outdoor UK Ltd

25 Argyll Street
London
W1F 7TU

Prepared by:

SLR (trading as Vectos (North) Limited)

4th Floor, Oxford Place, 61 Oxford Street,
Manchester, M1 6EQ

SLR Project No.: VN232785

17 January 2024

Revision: 02

Making Sustainability Happen

Revision Record

Revision	Date	Prepared By	Checked By	Authorised By
01	16 October 2023	PT	PT	PT
02	17 January 2024	PT	PT	PT

Basis of Report

This document has been prepared by Vectos North (SLR) with reasonable skill, care and diligence, and taking account of the timescales and resources devoted to it by agreement with Ocean Outdoor UK Ltd (the Client) as part or all of the services it has been appointed by the Client to carry out. It is subject to the terms and conditions of that appointment.

SLR shall not be liable for the use of or reliance on any information, advice, recommendations and opinions in this document for any purpose by any person other than the Client. Reliance may be granted to a third party only in the event that SLR and the third party have executed a reliance agreement or collateral warranty.

Information reported herein may be based on the interpretation of public domain data collected by SLR, and/or information supplied by the Client and/or its other advisors and associates. These data have been accepted in good faith as being accurate and valid.

The copyright and intellectual property in all drawings, reports, specifications, bills of quantities, calculations and other information set out in this report remain vested in SLR unless the terms of appointment state otherwise.

This document may contain information of a specialised and/or highly technical nature and the Client is advised to seek clarification on any elements which may be unclear to it.

Information, advice, recommendations and opinions in this document should only be relied upon in the context of the whole document and any documents referenced explicitly herein and should then only be used within the context of the appointment.

Table of Contents

1.0 Introduction 1
Overview 1
Proposal Site 1
Planning Background 2
Key Considerations 2
Report Structure 3
2.0 Site Assessment 4
Introduction 4
Development Proposals 6
Proposed Advertising Controls 8
Site Description 8
Blantyre Street 9
A57(M) Northbound Off-Slip 9
A57(M) Southbound Off-Slip 9
A5067 Chorlton Road 10
A56 Chester Road West 11
A56 Chester Road East 12
Roundabout Circulatory 13
Traffic Signal Sightlines Review 13
Controlled Crossings Review 13
Summary 14
3.0 Review of Accident Data 15
Introduction 15
Analysis 15
Summary 18
4.0 Comparable Sites 19
Introduction 19
Waterloo IMAX, London 19
Elephant and Castle Roundabout, London 19
20 Easton Road, Bristol 20
Kensington House, 136 Suffolk Street Queensway, Birmingham 21
216 County Road, Swindon 21
A57 Regent Road, Manchester 22
Summary 23
5.0 Conclusions 24

Summary 24
Conclusion 25

Appendices

Appendix A **Stage 1 Road Safety Audit and Designer's Response**
Appendix B **Proposed Digital Advertising Scheme Planning Drawings**
Appendix C **Accident Data Output Files**

1.0 Introduction

Overview

1.1 Vectos North (part of SLR) have been commissioned by Ocean Outdoor UK Ltd ('the Applicant') to provide a highway safety report relating to a proposal for the installation of four freestanding internally illuminated advertisements, associated supporting structures, equipment and landscaping, on land located at the Deansgate Interchange grade separated junction in Manchester.

1.2 The purpose of this report is therefore to assess the highway safety implications of erecting the digital advertising displays at the proposal site.

1.3 Vectos have undertaken a site visit on the 5th September 2023 to assess the proposals.

Proposal Site

1.4 The proposed scheme comprises of four digital advertising screens located on the four parcels of land that comprise the central island of the roundabout at the Deansgate Interchange junction in Manchester, which is at the southwest of the city centre. The digital displays will face towards the A5067 Chorlton Road, A57(M) Egerton Street eastbound off-slip and the A56 Chester Road west and east approaches to the roundabout. There is an existing digital display located adjacent to the A57(M) Mancunian Way northbound off-slip at the roundabout, and it is understood that the proposed scheme will remove this existing advertising screen at the Deansgate Interchange junction. The site location and the proposed site plan are shown in **Figures 1.1 and 1.2**.

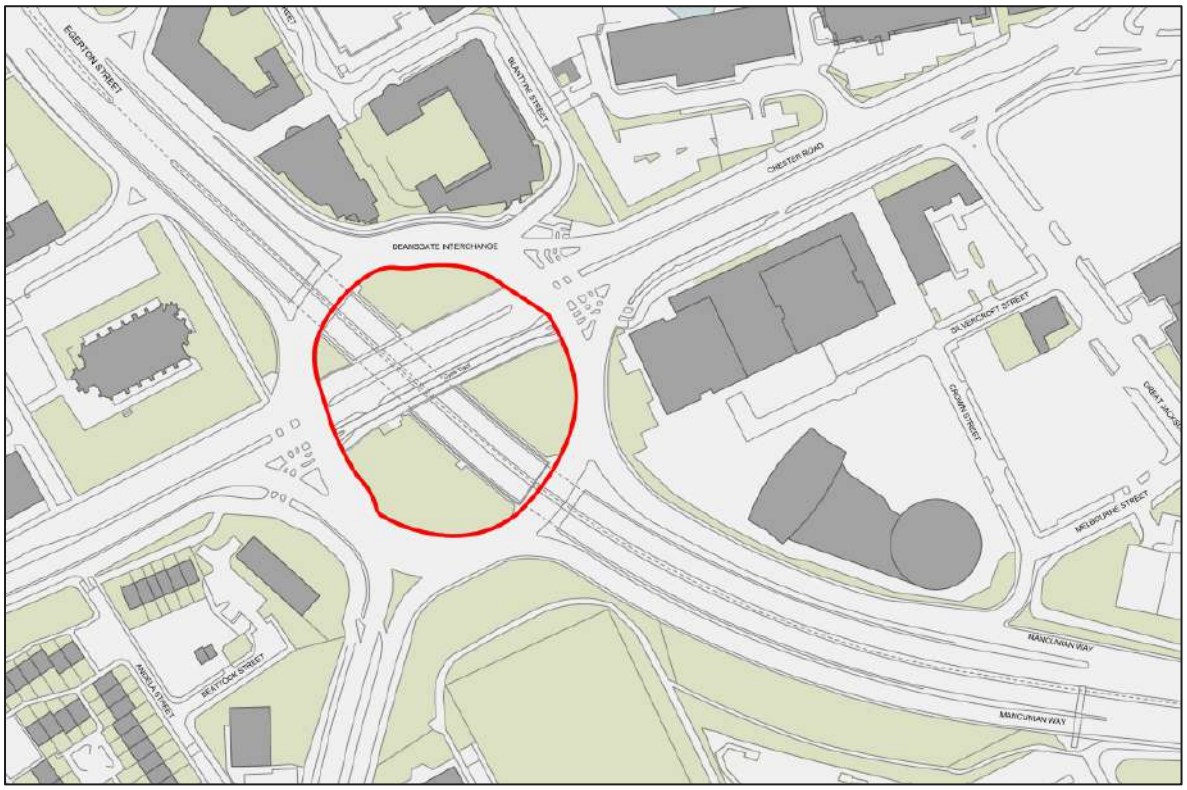

Figure 1.1 – Site Location Plan

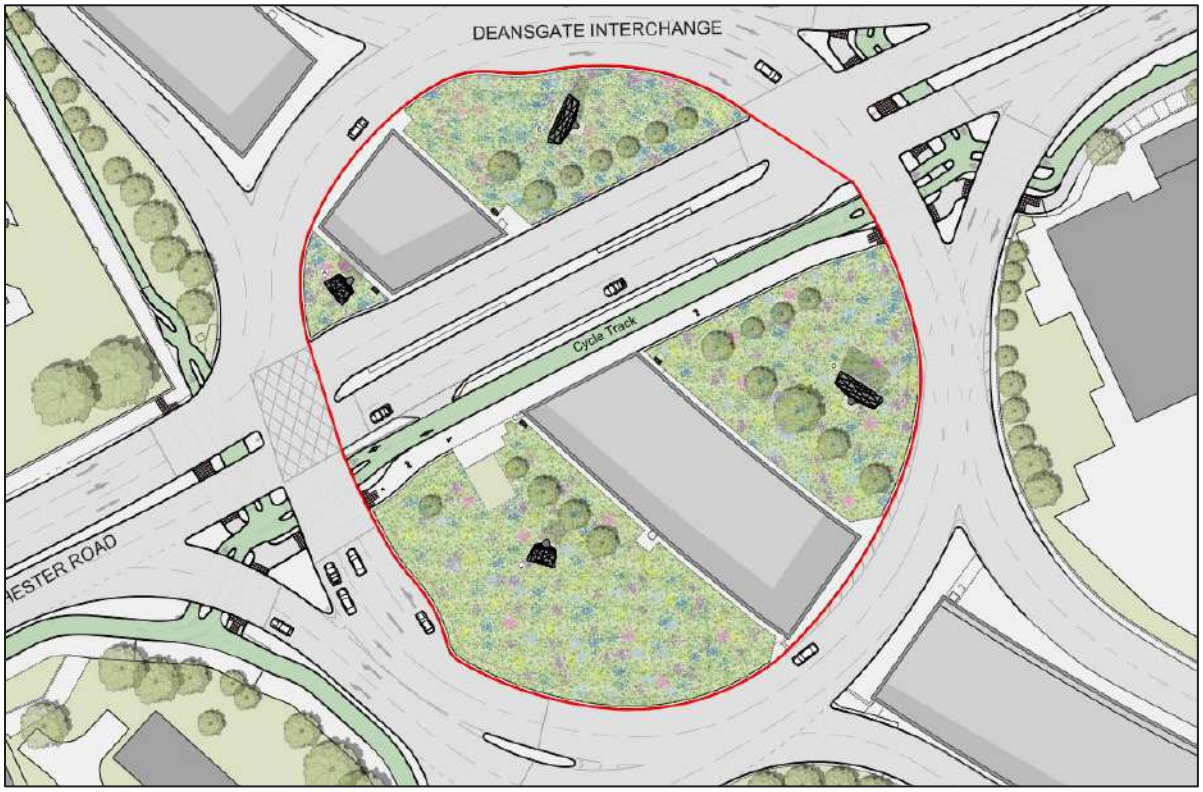

Figure 1.2 – Proposed Site Plan

Planning Background

1.5 It is understood that the applicant has engaged with Manchester City Council (MCC) Planning Officers at the pre-application stage of this project, and they have requested that an independent Road Safety Audit (RSA) be submitted with the advertising application. Accordingly, and in addition to this Highway Safety Assessment report, an independent Stage 1 RSA in respect of the design process for the proposal site has been undertaken. The RSA report is attached as **Appendix A**, along with the associated Designer's Response document prepared by Vectos North.

Key Considerations

1.6 The following factors will be subject to detailed analysis to ensure that no conflicts will arise as a result of the proposed digital advertising scheme:

- Proximity to traffic signals;
- Proximity to junctions, including merges and diverges;
- Proximity to controlled crossings;
- Proximity to traffic signs;
- Sightlines on the key approaches;
- Existing accident rates at this location; and

- Arrangement of the highway layout in the vicinity of the proposal site.

1.7 This document has been prepared in due cognisance of the Transport for London (TfL) document, '*Guidance for Digital Roadside Advertising and Proposed Best Practice*' (2013). Although the proposal site is outside of London, it is considered that the guidance document provides a good framework for assessing the suitability of sites for digital roadside advertising, and it should be noted that it is fully endorsed by TfL.

Report Structure

1.8 Following the introduction, the structure of this report is as follows:

- Chapter 2 sets out the proposal in more detail and reviews its relationship with the surrounding highway network and infrastructure;
- Chapter 3 reviews the accident data relevant to the proposal site on the key approaches;
- Chapter 4 provides some details on approved digital advertising sites at locations with similar characteristics and surrounding highway layouts; and
- Chapter 5 sets out the summary and conclusions of the report.

2.0 Site Assessment

Introduction

2.1 The following photographs capture the views on the key roads towards the proposal site on the A5067 Chorlton Road, A57(M) Egerton Street eastbound off-slip and the A56 Chester Road west and east approaches to the roundabout – refer to **Figures 2.1 to 2.4**.

Figure 2.1 – A5067 Chorlton Road Approach to Deansgate Interchange

Figure 2.2 – A57(M) Egerton Street Eastbound Off-Slip Approach to Deansgate Interchange

Figure 2.3 – A56 Chester Road (W) Approach to Deansgate Interchange

Figure 2.4 – A56 Chester Road (E) Approach to Deansgate Interchange

Development Proposals

2.2 The proposal site is the central island of the Deansgate Interchange roundabout and comprises four single-sided digital advertising displays as freestanding units within the four areas of soft landscaping. The digital screens will be directed towards the A5067 Chorlton Road (southwest facing Location C), the A57(M) southbound off-slip (northwest facing Location B) and the A56 Chester Road east (east facing Location D) and west (west facing Location A) approaches at the roundabout. The development proposals also include for improvements to the existing landscaping of the roundabout.

2.3 The proposed digital displays will be enclosed by a cowl design and setback within these hoods. Locations B and D will be landscape LED digital screens that are 3.18m above ground level and the advertising display structures will be 8.32m wide and 4.82m high, and from bottom to top the screens will be between 80mm and 415mm inside the hoods. Locations A and C will be portrait LED digital screens that are 3.18m above ground level and the advertising display structures will be 4.64m wide and 7.02m high, and from bottom to top the screens will be between 55mm and 400mm inside the hoods. The digital display to cowl measurements for the proposed portrait and landscape advertising screens are illustrated in **Figures 2.5 and 2.6**.

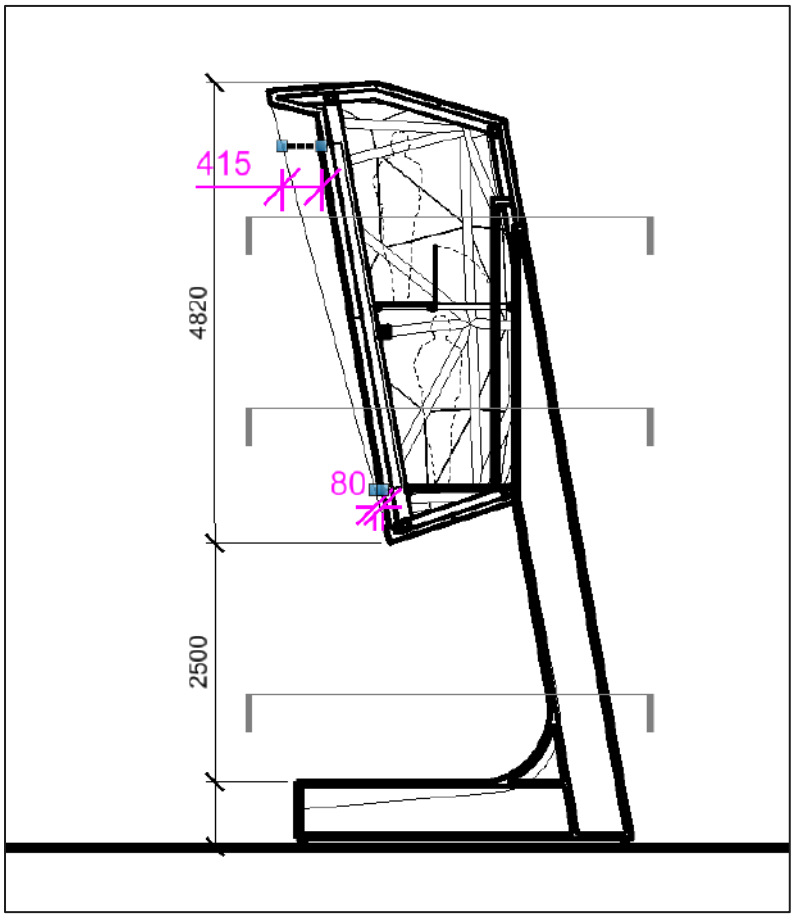

Figure 2.5 – Landscape Advertising Screen to Cowl Measurements

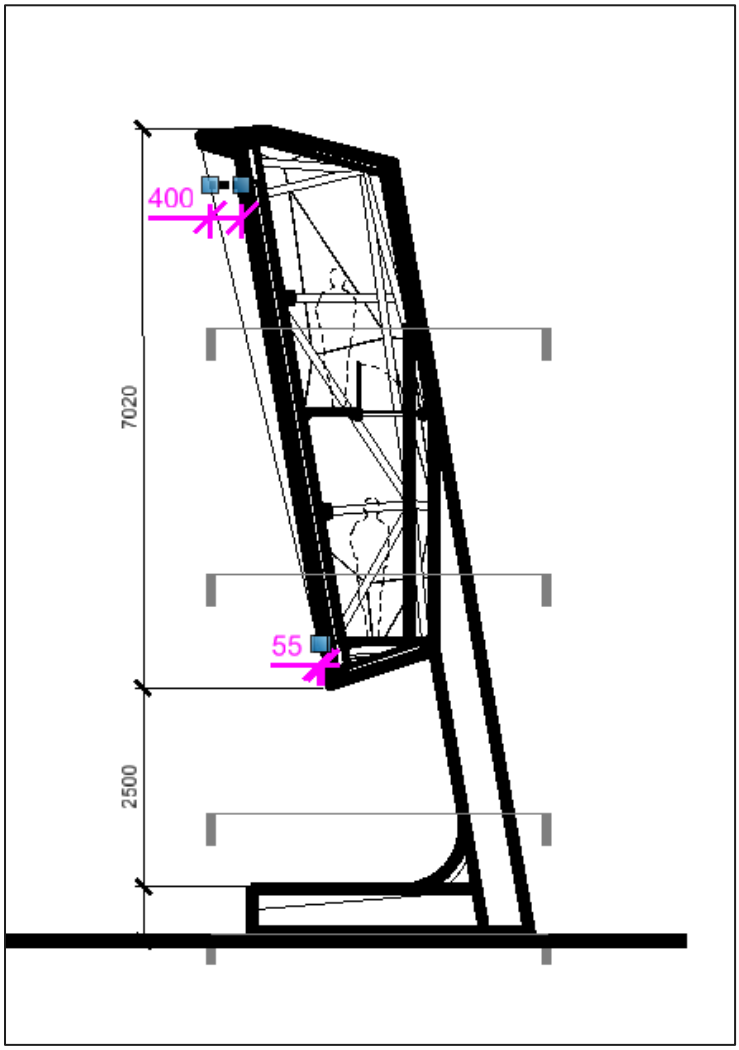

Figure 2.6 – Portrait Advertising Screen to Cowl Measurements

2.4 It is noted that until 2019 the roundabout accommodated two double-sided static non-digital 96-sheet advertising displays as one structure in the southwest soft landscaping area within the roundabout, and the proposed screens will replace the previous advertising structure that was dismantled prior to the implementation of the highway scheme at the roundabout in 2019.

2.5 There is an existing digital advertising display located adjacent to the A57(M) Mancunian Way northbound off-slip at Deansgate Interchange to the south of the roundabout, and it is understood that the proposed scheme will remove this existing digital advertising display.

2.6 The proposed scheme will be at a site that comprises an existing digital advertising display and it accommodated poster and paste advertisements until 2019, and therefore in the consideration of this proposal during the application process it should be noted that there is already a precedent with regard to roadside advertising being in view to traffic at this location. The TfL Guidance and Best Practice document states that static digital advertising is likely to be acceptable in locations where static advertising exists or would be accepted.

Proposed Advertising Controls

2.7 The following planning conditions are proposed by the applicant to control the operation of the digital advertising displays to ensure that the screens operate in a safe manner:

- The displays will be controlled by conditions in accordance with the Institution of Lighting Professionals 'Brightness of Illuminated Advertisements' (2015) guidance, with night time luminance limited to 300cd/m2 so as not to cause glare;
- The advertising screens shall not display any moving, or apparently moving, images;
- The sequential advertisements shall not change more than once every 10 seconds; and
- Any sequential change between advertisements will take place over a period no greater than one second unless otherwise agreed with the Local Authority.

2.8 It should be noted that the above operating conditions for digital advertising displays are typical at sites throughout the UK and are widely accepted by Local Authorities. Also, the applicant would be prepared to accept a curfew on the operation of the digital advertising displays requiring them to be turned off between the night time hours of 00:00 and 05:00.

2.9 Detailed plans of the proposed digital advertising scheme have been included in **Appendix B**.

2.10 It is important to note that the proposal will still be displaying static adverts and as such it is not considered that the proposal represents a material change or risk in terms of road safety. With the use of appropriate controls, digital advertising should be no more or less acceptable than traditional forms of advertising such as poster and paste.

Site Description

2.11 Deansgate Interchange is a grade separated roundabout and the A57(M) passes through the junction at a lower level. The A56 Chester Road and the A57(M) form the main approaches to the roundabout, with north and south facing slips to / from the A57(M) and Chester Road east and west arms. A5067 Chorlton Road and Blantyre Street form the other two arms of the roundabout.

2.12 Both the Chester Road approaches are three lanes, the A57(M) and Chorlton Road arms comprise of two-lane approaches and Blantyre Street is a single lane access from the roundabout that is between the A57(M) southbound off-slip and the Chester Road east arm. The roundabout has multiple lanes on the circulatory carriageway, and it is a partially signalised junction at the Chester Road and Chorlton Road approaches. The A57(M) north and south facing off-slips are both priority approaches onto the Deansgate Interchange roundabout. Both Chester Road approaches provide access onto the roundabout, and it also passes east-west through the centre of the junction consisting of two lanes in each direction to cater for the high traffic volumes on this corridor. Deansgate Interchange roundabout is subject to a 30mph speed limit and is lit.

2.13 Pedestrian and cycling facilities are present at the Deansgate Interchange roundabout, including segregated cycle lanes on Chester Road through the junction, the Chorlton Road

approach and on the A57(M) north facing slips. There are footways in place on the above approaches at the roundabout. There is a stagger-controlled crossing on Chorlton Road for cyclists and controlled crossings for pedestrians and cyclists at the two Chester Road arms of the roundabout, including at the two locations on the circulatory carriageway where Chester Road runs through the junction.

2.14 The development proposals comprise of four single-sided digital advertising displays that will be directed towards the Chorlton Road, the A57(M) southbound off-slip and the Chester Road east and west approaches at the Deansgate Interchange roundabout. The potential effects of the advertising screens in relation to driver distraction has been considered in more detail on these arms of the junction, including the consideration of Blantyre Street and the circulatory carriageway.

Blantyre Street

2.15 It is a one-way street off the Deansgate Interchange roundabout and drivers will be exiting the junction. The proposed digital advertising displays will not be visible to drivers accessing Blantyre Street, and so there will be no interaction or safety conflict.

A57(M) Northbound Off-Slip

2.16 The A57(M) northbound off-slip consists of two lanes at the Deansgate Interchange roundabout. The proposed digital advertising displays will not be visible to drivers approaching the junction on the slip road and when they enter the roundabout, and so there will be no interaction or safety conflict.

A57(M) Southbound Off-Slip

2.17 The A57(M) southbound off-slip consists of two lanes at the Deansgate Interchange roundabout.

2.18 The proposed advertising screen at Location B will be northwest facing towards the A57(M) southbound off-slip.

2.19 The location of the digital display will be broadly consistent with nearside carriageway position on this key approach. The TfL guidance document acknowledges that a digital advertisement is likely to be best located alongside the nearside carriageway to reflect where official road signs would normally be located. This will locate the advertisement in the driver's eye and reduce the risk of drivers turning away from the road.

2.20 There is a 'directional informatory sign' located to the nearside of the carriageway approximately 90m to the north of the Location B digital advertising display on the slip road, and so drivers will have the opportunity to assimilate both sets of information in sequence. There are also 30mph signs on the slip road adjacent to the roundabout, but these will be to either side of the digital display and below the height of the advertising screen. It is therefore considered that the proposed digital advertising display does not conflict with traffic signage on this approach.

2.21 Due to the relatively straight alignment of the carriageway towards the proposal site, it is considered that drivers will have good visibility and a clear sight line towards the advertising display position from around 150m to the north. This is an appropriate forward visibility

distance for the speed of the road, which would give sufficient time for the proposal's contents to be assimilated without surprise.

2.22 Drivers on the approach to the give way line at the entry to the roundabout will be aware of the of the digital display in advance of the junction and given its location in the driver's eye line, the advertising screen will be visible in the same view as drivers looking ahead. Vehicles exiting the priority junction will be giving way to traffic on the roundabout circulatory that is approaching from the southwest, and the proposed advertising displays at Locations A and B will not conflict with this sightline.

2.23 For the above reasons, it is considered that the proposed digital advertising display at Location B will not create an unacceptable impact for traffic passing the site on the A57(M) southbound off-slip approach in terms of risk to public safety.

A5067 Chorlton Road

2.24 This is the southern arm of the Deansgate Interchange roundabout, which is signalised and the northbound carriageway is two lanes on the approach to the junction.

2.25 The proposed advertising screen at Location C will be southwest facing towards the Chorlton Road approach.

2.26 The location of the digital display will be broadly consistent with nearside carriageway position on this key approach.

2.27 Due to the relatively straight alignment of the carriageway towards the proposal site, it is considered that drivers will have good visibility and a clear sight line towards the advertising display position from around 150m to the south. This is an appropriate forward visibility distance for the speed of the road, which would give sufficient time for the proposal's contents to be assimilated without surprise.

2.28 The stop line at the Chorlton Road arm of the roundabout is located approximately 45m to the south of the Location C digital advertising display. This signalised arm of the junction comprises of near and offside primary traffic signal heads at the stop line, and the secondary signal head is located on a traffic island that is between the second and third lanes of the roundabout circulatory.

2.29 The driver sightline towards the proposal site at the 43m Stopping Sight Distance (SSD) on the Chorlton Road approach to the stop line (critical decision-making distance), is illustrated in **Drawing VN232785-D100 Rev C**. It is considered that the proposed advertising display position and the locations of the nearside and offside traffic signals that control this arm of the Deansgate Interchange junction will not interact in respect of approaching drivers at the 43m SSD for the 30mph approach speed, and there will be no safety conflict. From the 43m SSD, the proposed advertising display will be seen by drivers between the nearside and offside primary traffic signals and there will be no interaction with the secondary signal. The position of the Location C digital advertising display is not considered to be in conflict with the motorist's view of the Chorlton Road approach to the Deansgate Interchange junction and the associated traffic signals as detailed above.

2.30 The traffic signals comprise of backing boards and this will further help to isolate them from the advertising display and ensure that the signal heads are clear to drivers, and it is

understood that the night time brightness of the proposed digital display up to 300cd/m2 is generally lower than the luminance of traffic signals.

2.31 For the above reasons, it is considered that the proposed digital advertising display at Location C will not create an unacceptable impact for traffic passing the site on the A5067 Chorlton Road approach in terms of risk to public safety.

A56 Chester Road West

2.32 This is the western arm of the Deansgate Interchange roundabout, which is signalised and the eastbound carriageway is three lanes on the approach to the junction.

2.33 The proposed advertising screen at Location A will be west facing towards the Chester Road west approach.

2.34 The location of the digital display will be broadly consistent with nearside carriageway position on this key approach.

2.35 The proposed digital display at Location A is not in conflict with any traffic signs on this approach, therefore this does not require any further analysis.

2.36 On this approach to the Deansgate Interchange junction, it is considered that drivers will have a sight line towards the Location A advertising display position from around 80m to the west. This distance is appropriate and in line with the Manual for Streets (MfS) SSD for a 30mph road and it would give sufficient time for the presence of the advertising display ahead to be assimilated without surprise. At this location on the approach to the site the proposed advertising display will only be partially visible to drivers due to some large trees near the footway on the north side of the carriageway, which will minimise the driver distraction effect.

2.37 The stop line at the Chester Road west arm of the roundabout is located approximately 35m to the west of the Location A digital advertising display. This signalised arm of the junction comprises of near and offside primary traffic signal heads at the stop line, and the secondary signal head is located on the Chester Road central island to the east of the roundabout circulatory.

2.38 The driver sightline towards the proposal site at the 43m Stopping Sight Distance (SSD) on the Chester Road west approach to the stop line (critical decision-making distance), is illustrated in **Drawing VN232785-D100 Rev C**. It is considered that the proposed advertising display position and the locations of the offside primary and secondary traffic signals that control this arm of the Deansgate Interchange junction will not interact in respect of approaching drivers at the 43m SSD for the 30mph approach speed, and the proposed advertising display will be seen by drivers to the left of these traffic signal heads. The advertising screen position and the location of the nearside primary traffic signal on this arm will not interact in respect of approaching drivers in the nearside and offside lanes. The position of the Location A digital advertising display is not considered to be in conflict with the motorist's view of the Chester Road west approach to the Deansgate Interchange junction and the associated traffic signals as detailed above.

2.39 The traffic signals comprise of backing boards and this will further help to isolate them from the advertising display and ensure that the signal heads are clear to drivers, and it is

understood that the night time brightness of the proposed digital display up to 300cd/m2 is generally lower than the luminance of traffic signals.

2.40 For the above reasons, it is considered that the proposed digital advertising display at Location A will not create an unacceptable impact for traffic passing the site on the A56 Chester Road west approach in terms of risk to public safety.

A56 Chester Road East

2.41 This is the eastern arm of the Deansgate Interchange, which is signalised and the westbound carriageway is three lanes on the approach to the junction. This approach splits into two stop lines at the roundabout, with two lanes onto the circulatory carriageway and two lanes for Chester Road westbound through the junction.

2.42 The proposed advertising screen at Location D will be east facing towards the Chester Road east approach.

2.43 The location of the digital display will be broadly consistent with nearside carriageway position on this key approach.

2.44 The proposed digital display at Location D is not in conflict with any traffic signs on this approach, therefore this does not require any further analysis.

2.45 On this approach to the Deansgate Interchange junction, it is considered that drivers will have a sight line towards the Location D advertising display position from around 120m to the east. This distance is appropriate and in line with the MfS SSD for a 30mph road and it would give sufficient time for the presence of the advertising display ahead to be assimilated without surprise. At this location on the approach to the site the proposed advertising display will only be partially visible to drivers due to trees in the footway on the south side of the carriageway, which will minimise the driver distraction effect.

2.46 The stop lines at the Chester Road east arm of the roundabout are located approximately 40m to the east of the Location D digital advertising display. This signalised arm of the junction comprises of near and offside primary traffic signal heads at both stop lines, and the secondary signal heads located in offside positions.

2.47 The driver sightline towards the proposal site at the 43m Stopping Sight Distance (SSD) on the Chester Road east approach to the stop lines (critical decision-making distance), is illustrated in **Drawing VN232785-D100 Rev C**. It is considered that the proposed advertising display position and the locations of the nearside and offside traffic signals that control this arm of the Deansgate Interchange junction will not interact in respect of approaching drivers at the 43m SSD for the 30mph approach speed, and there will be no safety conflict. From the 43m SSD, there will be no interaction with the Chester Road westbound traffic signal heads, and the proposed advertising display will be seen by drivers to the left of the three traffic signal heads that control the two left filter lanes onto the circulatory carriageway. The position of the Location D digital advertising display is not considered to be in conflict with the motorist's view of the Chester Road east approach to the Deansgate Interchange junction and the associated traffic signals as detailed above.

2.48 The traffic signals comprise of backing boards and this will further help to isolate them from the advertising display and ensure that the signal heads are clear to drivers, and it is

understood that the night time brightness of the proposed digital display up to 300cd/m2 is generally lower than the luminance of traffic signals.

2.49 For the above reasons, it is considered that the proposed digital advertising display at Location D will not create an unacceptable impact for traffic passing the site on the A56 Chester Road east approach in terms of risk to public safety.

Roundabout Circulatory

2.50 The proposed digital displays will be enclosed by a cowl design and setback within these hoods, and this will minimise the interaction of the advertising screens with vehicles on the roundabout circulatory at the Deansgate Interchange junction.

2.51 Due to the orientation of the proposed advertising screens across the roundabout circulatory and them being broadly perpendicular to the carriageway, it is considered that the distraction effect of the proposal site will be minimised as the digital display structures will be in the periphery of the driver field of vision briefly as vehicles pass them. The locations of the proposed digital advertising displays within the central island of the Deansgate Interchange roundabout will not interact with the traffic signals that control the stop lines on the circulatory carriageway at the A5067 Chorlton Road and both A56 Chester Road arms, and there will be no safety conflict.

2.52 For the above reasons, it is considered that the proposed digital advertising displays at the Deansgate Interchange junction will not create an unacceptable impact for traffic passing the site on the roundabout circulatory in terms of risk to public safety.

Traffic Signal Sightlines Review

2.53 The driver sightlines to the traffic signals at the Deansgate Interchange roundabout have been assessed in relation to the four proposed digital advertising displays. **Drawing VN232785-D100 Rev C** details the driver sight lines on the following approaches in accordance with the Stopping Sight Distance for a 30mph road speed:

- A5067 Chorlton Road;
- A57(M) southbound off-slip;
- A56 Chester Road west; and
- Chester Road east.

2.54 The positions of the proposed advertising displays are not considered to be in conflict with the motorist’s views of traffic signals on the above approaches at the Deansgate Interchange roundabout.

Controlled Crossings Review

2.55 The sightlines between active travel users (pedestrians and cyclists) and approaching vehicles for the controlled crossings at the Deansgate Interchange roundabout have been assessed in relation to the four proposed digital advertising displays for a 30mph road speed Stopping Sight Distance.

2.56 **Drawing VN232785-D101** shows that the positions of the proposed advertising displays are not considered to be in conflict with the driver and active travel user sightlines to / from the controlled crossings at the Deansgate Interchange junction.

Summary

2.57 The site assessment in this chapter has reviewed the proposal site in the context of the key factors that are relevant in terms of the consideration of the acceptability of the site for roadside digital advertising. The proposal site is deemed to be appropriate for roadside advertising following the assessment of the existing traffic and transport conditions.

2.58 In summary, it is considered that the proposed digital advertising displays:

- Are in a location where the principle of advertising has long been established;
- Do not conflict with the safe operation of the adjacent Deansgate Interchange junction;
- Do not conflict with traffic signs;
- Benefit from good sightlines on the key approaches;
- Do not generally conflict with the motorist's view of the traffic signals at the 43m SSD from the stop lines at the A5067 Chorlton Road and both A56 Chester Road approaches;
- Do not conflict with the A57(M) southbound off-slip approach to the roundabout;
- Are not in conflict with the driver and active travel user sightlines to / from the controlled crossings at the Deansgate Interchange junction;
- Do not present a safety risk in terms of pedestrian and cycling movements; and
- Will not create an unacceptable impact in terms of driver distraction and risk to public safety for traffic passing the proposal site.

Notes:

1. This is not a construction drawing and is intended for illustrative
2. purposes only.
3. White lining is indicative only.
   Road marking and OS information taken from junction layout drawing 10293-SHP-A-B5D7-G100-PL-XX-001 provided by Simpson Haugh

Legend:

- Traffic Signal Sightline which does not directly affect the Digital Advertising Display - 43m for a 30mph road speed to the traffic signal head (Manual for Streets)
- Visibility to the right along circulatory carriageway from the entry arm - 43m for a 30mph road speed (Manual for Streets)
- Primary Traffic Signal
- Secondary Traffic Signal

Rev	Amendments	Date	By	Chk	Auth
C	Updated Site Layout	17.01.24	DJR	PT	PT
B	Amendment to sightlines	17/10/23	DJR	PT	PT
A	Amendment to sightlines	16/10/23	DJR	PT	PT

SLR

www.slrconsulting.com

Drawing Status & Suitability Code
S2 - ISSUE FOR INFORMATION

Client
Ocean Outdoor

Project
Advertising Scheme Deansgate Interchange, Manchester

Drawing Title
Traffic Signal Visibility/ Sight Line Review

Scale	SLR Project No.
1:1000 @ A3	VN232785

Designed	Drawn	Checked	Authorised
DJR	DJR	PT	PT
16/10/23	16/10/23	16/10/23	16/10/23

Drawing Number
VN232785-D100

Rev.
C

N:\Vectos_Job Data\2023\VN232785 Advertising Scheme Deansgate Interchange, Manchester\CAD\Vectos (North) Ltd Drawings\VN232785-D100-C Traffic Signal Visibility Sightlines.dwg 17/01/2024

© Crown copyright and database rights 2023 Ordnance Survey Licence number 2023

© This drawing and its content are the copyright of SLR Consulting Ltd and may not be reproduced or amended except by prior written permission. SLR Consulting Ltd accepts no liability for any amendments made by other persons.

Notes:

1. This is not a construction drawing and is intended for illustrative
2. purposes only.
3. White lining is indicative only.
   Road marking and OS information taken from junction layout drawing 10293-SHP-A-B5D7-G100-PL-XX-001 provided by Simpson Haugh

Legend:

- Pedestrian Visibility Splay - 43m for a 30mph road speed to the traffic signal head (Manual for Streets)
- Primary Traffic Signal
- Secondary Traffic Signal

Rev	Amendments	Date	By	Chk	Auth

SLR

www.slrconsulting.com

Drawing Status & Suitability Code
S2 - ISSUE FOR INFORMATION

Client
Ocean Outdoor

Project
Advertising Scheme Deansgate Interchange, Manchester

Drawing Title
Pedestrian Visibilility Review

Scale	SLR Project No.
1:1000 @ A3	VN232785

Designed	Drawn	Checked	Authorised
DJR	DJR	PT	PT
Date 17/01/24	Date 17/01/24	Date 17/01/24	Date 17/01/24

Drawing Number	Rev.
VN232785-D101	-

17/01/2024

N:\Vectos_Job Data\2023\VN232785 Advertising Scheme Deansgate Interchange, Manchester\CAD\Vectos (North) Ltd Drawings\VN232785-D101 Pedestrian Visibility Sightlines.dwg

© Crown copyright and database rights 2024 Ordnance Survey Licence number 2024

© This drawing and its content are the copyright of SLR Consulting Ltd and may not be reproduced or amended except by prior written permission. SLR Consulting Ltd accepts no liability for any amendments made by other persons.

3.0 Review of Accident Data

Introduction

3.1 In order to examine whether the digital advertising displays at the proposal site are likely to cause a safety concern, accident data from Transport for Greater Manchester (TfGM) for the period between 1st January 2016 and 31st July 2023 has been obtained.

3.2 A plan of the accident locations is shown below in **Figure 3.1**, while the full accident report has been included as **Appendix C** to this document.

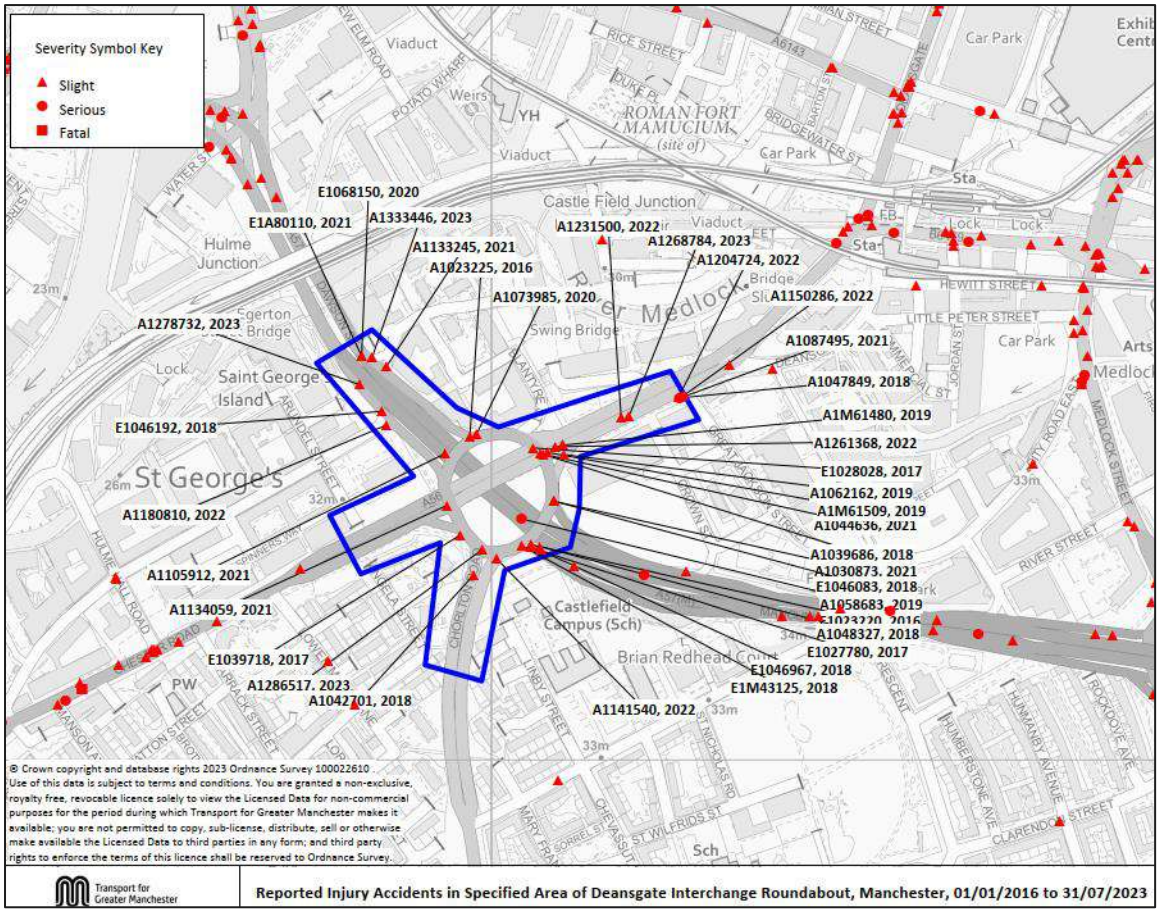

Figure 3.1 – Locations of Accidents in the Vicinity of the Proposal Site *Source – TfGM*

Analysis

3.3 The accident data shows that a total of 26 accidents occurred in the five-year period from 1st August 2018 to 31st July 2023, with 23 being 'slight' in severity and three classified as 'serious'.

3.4 It is important to note that until 2019 the Deansgate Interchange junction accommodated two double-sided static non-digital 96-sheet advertising displays as one structure in the southwest soft landscaping area within the roundabout. In addition, there is an existing digital advertising display located adjacent to the A57(M) Mancunian Way northbound off-slip at Deansgate Interchange to the south of the roundabout that has been in situ from around 2017, and before then it had been in operation as a poster and paste advertising display.

3.5 Following a detailed review of the accident data provided by TfGM, it is considered that the following accidents are not relevant in the context of the proposal (i.e., the digital advertising displays being in place would not have been a contributory factor).

- Accident A1278732 occurred on the A57(M) north facing on-slip, where the proposed digital advertising screens would not have been in view;
- Accident A1180810 happened at the Ellesmere Street junction with the A57(M) north facing on-slip to the north of the site, where the proposed digital advertising screens would not have been in view;
- Accidents A1333446 and A1133245 occurred at the Blantyre Street junction with the A57(M) north facing off-slip to the north of the site, where the proposed digital advertising screens would not have been in view;
- Accidents A1105912, A1058683 and E1046967 happened on the A57(M) mainline immediately adjacent to the Deansgate Interchange junction at a lower level to the roundabout;
- Accident A1286517 occurred on the roundabout circulatory at the A5067 Chorlton Road approach, where the proposed digital advertising screens would not have been in the driver line of sight;
- Accident A1141540 happened on the Chorlton Road exit from the roundabout, where the proposed digital advertising screens would not have been in view;
- Accidents E1068150 and E1A80110 occurred at the northern end of the A57(M) north facing off-slip, where the proposed digital advertising screens would not have been in view;
- Accident A1048327 happened on the A57(M) south facing off-slip, where the proposed digital advertising screens would not have been in view;
- Accident A1044636 was caused by a vehicle turning right from the A56 Chester Road eastbound carriageway onto the roundabout circulatory at the east side of the junction, where the proposed digital advertising screens would not have been in view;
- Accident A1030873 occurred on the A57(M) south facing on-slip exit from the roundabout, where the proposed digital advertising screens would not have been in view;
- Accidents A1231500 and A1268784 happened on the Chester Road east approach to the Deansgate Interchange around 90m to the east of the junction, and there would not be any material interaction with the proposal site at this location; and
- Accidents A1204724, A1087495, A1150286 and A1047849 occurred on the Chester Road east approach to the Deansgate Interchange around 140m to the east of the junction, and there would not be any material interaction with the proposal site at this location.

3.6 Summaries and conclusions of the related accidents to the proposal site are provided below. These accidents occurred at locations where the proposed digital advertising displays could have been in view.

Accident Reference A1134059 (Slight, September 2021)

3.7 This accident involved a collision between two cars as a result of a vehicle driving through a red signal at the Chester Road west approach at the roundabout. Travelling too fast for conditions, failure to look properly, careless driving and disobeying an automatic traffic signal were listed as contributory factors. As detailed in the previous section, the position of the Location A digital advertising display is not considered to be in conflict with the motorist's view of the traffic signals that control the Chester Road west arm of the Deansgate Interchange roundabout.

Accident Reference A1073985 (Slight, August 2020)

3.8 This accident involved a collision between two cars on the roundabout circulatory at the signalised junction with the Chester Road east approach, when a stationary vehicle is hit from behind. The Location B digital advertising display would have been in the periphery of the drivers' field of vision where the accident happened.

Accident Reference A1M61509 (Slight, September 2019)

3.9 This accident occurred on the Chester Road east approach to the roundabout and was caused by a vehicle changing lane without indicating. It is considered that the circumstances of how it occurred, are not relevant in the context of the proposal.

Accident Reference A1261368 (Slight, December 2022)

3.10 This accident occurred on the Chester Road east approach to the roundabout and was a collision between two cars when they were both moving. There are limited details on the occurrence of the accident, but it occurred at a location where the Location D proposed advertising screen would be in view.

Accident Reference A1M61480 (Slight, September 2019)

3.11 This accident occurred on the Chester Road east approach to the roundabout at the stop line and was caused by a LGV reversing into a motorcycle when both vehicles were waiting on a red signal. It is considered that the circumstances of how it occurred, are not relevant in the context of the proposal.

Accident Reference A1062162 (Slight, September 2019)

3.12 This accident involved a collision between two cars at Chester Road east approach onto the roundabout, when a stationary vehicle is hit from behind. The accident occurred at a location where the Location D proposed advertising screen would be in view.

Summary

3.13 There has been a total of 26 accidents within the vicinity of the site that have occurred in the five-year period from 1st August 2018 to 31st July 2023, however only three of these are considered to be relevant to the four proposed digital advertising screens as detailed above.

3.14 Whilst any accident is regrettable, it is not considered that the accident rate above of 0.6 per year demonstrates a poor safety record for the adjacent highway network, which is a key strategic route in Manchester with high volumes of traffic, cyclists and pedestrians in the area. Also, the three relevant accidents to the development proposals were all slight in severity.

3.15 Also, it is important to note that the accident rate for the approximate 2.5-year period before the 1st August 2018 when there were two double-sided static non-digital 96-sheet advertising displays at the roundabout is 3.9 accidents per year, which is less than 5.2 accidents per year for the five-year period from 1st August 2018 to 31st July 2023 taking into account that these advertising displays were removed around the end of 2018.

3.16 It is considered that the proposal site for the four digital advertising displays is in a good location in terms of the recent accident record in the vicinity, and it is not likely to cause a road safety problem.

3.17 In summary, there will not be a conflict with the proposal to erect the digital advertising scheme at the Deansgate Interchange junction.

4.0 Comparable Sites

Introduction

4.1 Advertisements are now a common sight on arterial roads in major cities and as such, are not an 'unusual' or 'surprising' distraction for drivers. This chapter provides examples of other sites where digital advertising displays have been introduced at urban locations and also of site locations with similar characteristics and surrounding highway layouts.

Waterloo IMAX, London

4.2 The IMAX is located in close proximity to Waterloo Station and is at the centre of four key vehicular routes with displays aimed at road, pedestrian and cycle users. The advertising feature comprises a significant dome structure, which has a circular digital advertising display encompassing all of the central island. This location comprises of a complex four-arm signalised junction. **Figure 4.1** presents an image and location plan of this existing digital advertising site.

Figure 4.1 – A3200 / A301 / Waterloo Bridge Signalised Junction, London *Source – http://www.oceanoutdoor.com/products/banners/imax/*

Elephant and Castle Roundabout, London

4.3 The Elephant and Castle roundabout is located in close proximity to the Elephant & Castle Station and is at the centre of five key vehicular routes with displays aimed at road, pedestrian and cycle users. The digital advertising display is located in the central island of the five-arm signalised junction and faces northwards towards the A3, as illustrated in **Figure 4.2**.

Figure 4.2 – A201 / A3 / A302 / Newington Butts / London Road Signalised Junction, London

20 Easton Road, Bristol

4.4 This advertising application (Bristol City Council application reference 16/02824/A) comprised of the replacement of an internally lit advertising display with a larger LED digital advertising screen. The application was approved in July 2016 and the site is located adjacent to the Lawrence Hill Roundabout close to Bristol City Centre where the A420 and A4320 major routes converge, as shown in **Figure 4.3**.

Figure 4.3 – 20 Easton Road, Bristol, Site Location *Source – Google Maps*

Kensington House, 136 Suffolk Street Queensway, Birmingham

4.5 This advertising application (Birmingham City Council application reference 2014/08565/PA) comprised of a new LED 48-sheet (6m x 3m) digital advertising screen. The application was approved in January 2015 and the site is located adjacent to the Queensway Roundabout (A38 / Holloway Head / Smallbrook Queensway junction) in Birmingham City Centre, as shown in **Figure 4.4**.

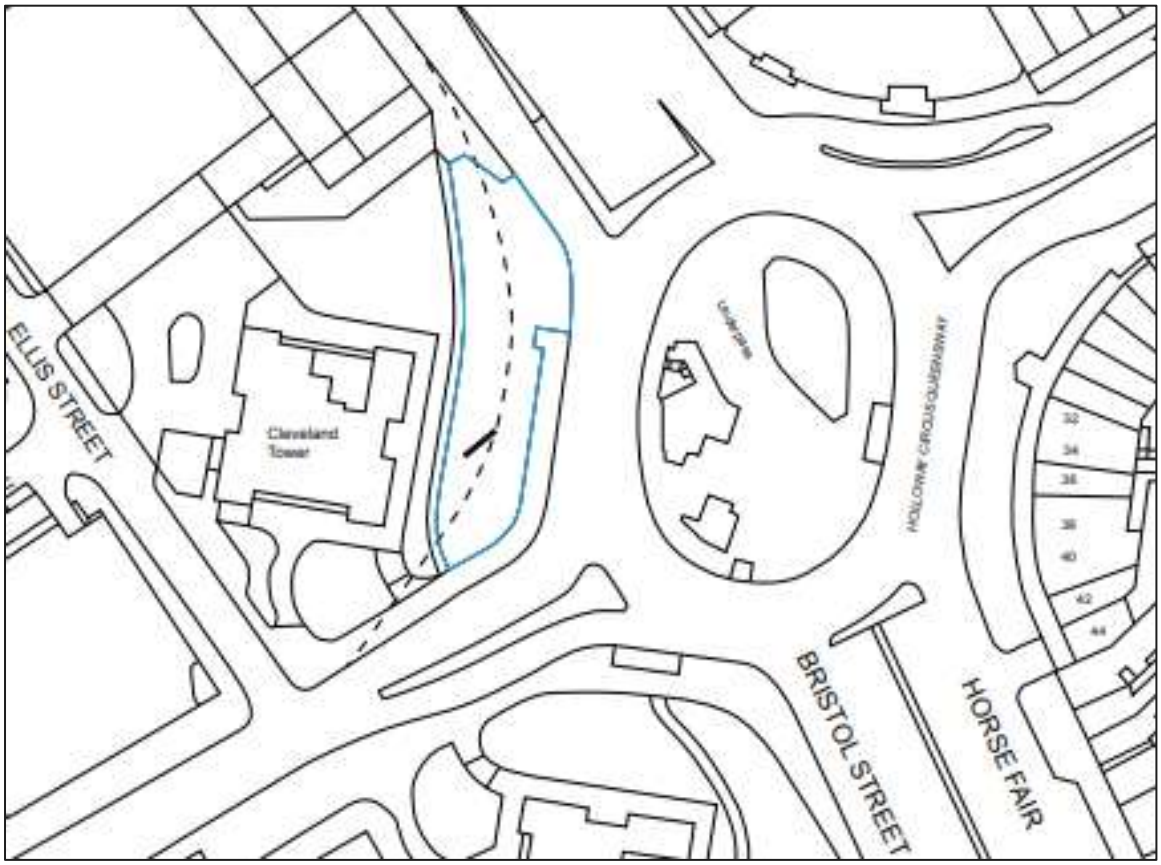

Figure 4.4 – Kensington House, Birmingham, Site Location *Source – 2014/08565/PA Location Plan*

216 County Road, Swindon

4.6 This advertising application (Swindon Borough Council application reference S/ADV/17/1488) comprised of the replacement of a 48-sheet poster and paste advert with a 48-sheet digital advertising screen. The application was approved in November 2017 and the site is located adjacent to the Magic Roundabout (A4289 / Shrivenham Road / A4312 / B4289 / Fleming Way junction) in Swindon, as shown in **Figure 4.5**.

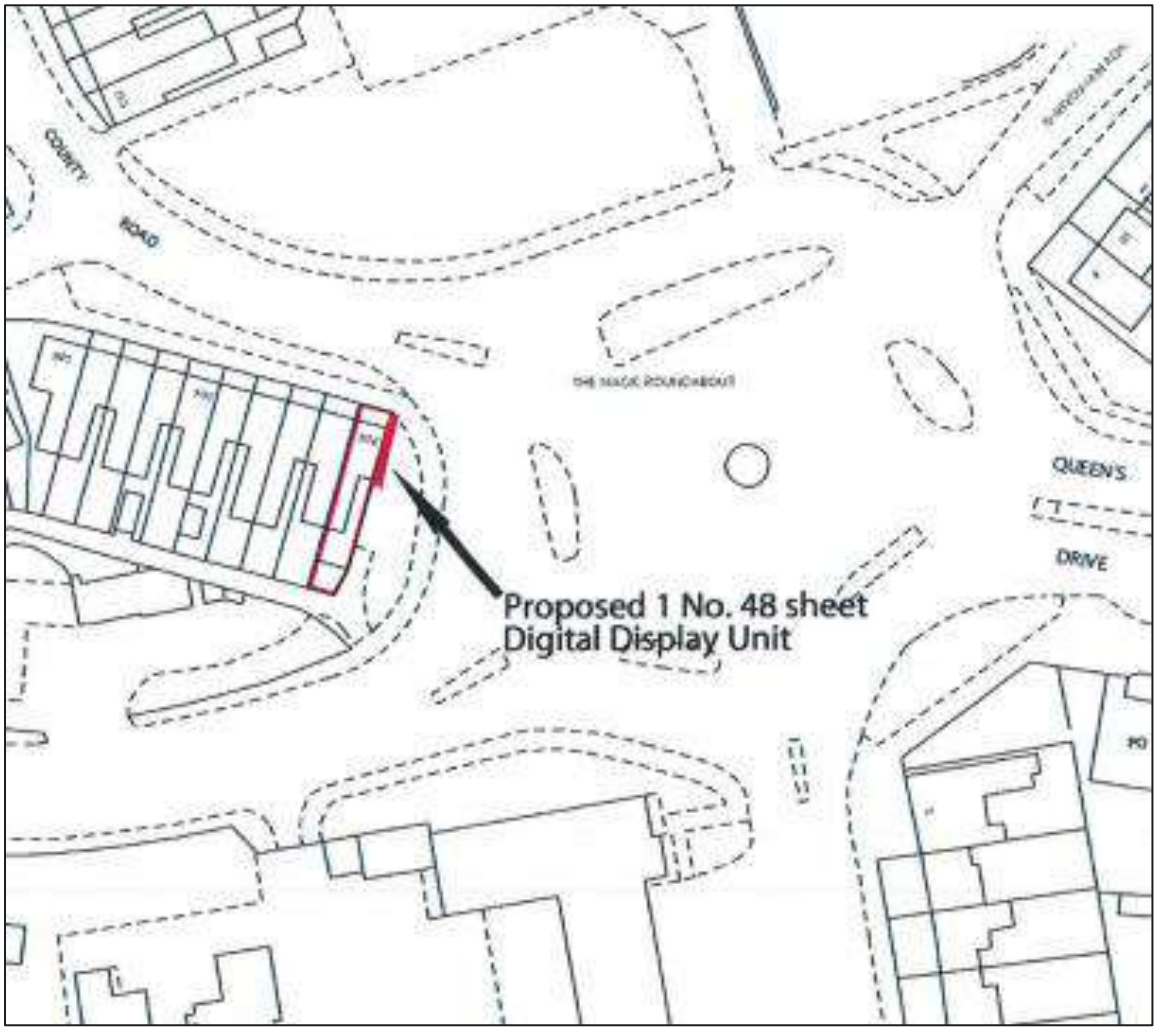

Figure 4.5 – 216 County Road, Swindon, Site Location *Source – S/ADV/17/1488 Site Location Plan*

A57 Regent Road, Manchester

4.7 There is an existing digital advertising display in Manchester on an overhead gantry where traffic approaching the city from the M602 meets traffic on the arterial A5063 and A57 routes, and this is a similar arrangement in terms of locational characteristics to the proposal site. There is a large signal junction at the end of the M602 inbound towards Manchester, which continues as the A57 and an arterial route into the city centre and although the digital advertising display is overhead, it is located immediately at the end of the motorway. This example is documented below with a photographic record and site location plan.

Figure 4.6 – Digital Advertising Display at A57 Regent Road / M602 / A5063 Trafford Road Signalised Roundabout, Manchester

Summary

4.8 This chapter has reviewed existing sites and advertising applications for digital displays in other similar locations and highway environments across the UK. It has been shown that there are various examples of digital advertising displays, which are similar in location that have gained planning permission or being successful on appeal. The case studies include local examples where digital advertising displays have been introduced in the vicinity of roundabouts including traffic signal-controlled junctions, and along radial routes.

5.0 Conclusions

Summary

5.1 Vectos North (part of SLR) have been commissioned by Ocean Outdoor UK Ltd to support an advertising application for the proposed installation of four freestanding internally illuminated advertisements, associated supporting structures, equipment and landscaping, on land located at the Deansgate Interchange grade separated junction in Manchester.

5.2 An independent Stage 1 RSA has also been undertaken in respect of the design process for the proposal site has been undertaken, and this is included within the report along with the associated Designer's Response document.

5.3 The proposal site is the central island of the Deansgate Interchange roundabout, and the digital screens will be directed towards the A5067 Chorlton Road (southwest facing Location C), the A57(M) southbound off-slip (northwest facing Location B) and the A56 Chester Road east (east facing Location D) and west (west facing Location A) approaches at the roundabout. The proposed digital displays will be enclosed by a cowl design and setback within these hoods. Locations B and D will be landscape LED digital screens and Locations A and C will be portrait screens.

5.4 It is noted that until 2019 the roundabout accommodated two double-sided static non-digital 96-sheet advertising displays as one structure in the southwest soft landscaping area within the roundabout, and the proposed screens will replace the previous advertising structure that was dismantled prior to the implementation of the highway scheme at the roundabout in 2019. There is an existing digital advertising display located adjacent to the A57(M) Mancunian Way northbound off-slip at Deansgate Interchange to the south of the roundabout, and it is understood that the proposed scheme will remove this existing digital advertising display.

5.5 As detailed earlier in chapter 2, planning conditions are proposed by the applicant to control the operation of the digital advertising displays to ensure that the screens operate in a safe manner.

5.6 The proposal site has been reviewed with due consideration given to the following factors, and the assessment has demonstrated that the proposed digital advertising displays:

- Are in a location where the principle of advertising has long been established;
- Do not conflict with the safe operation of the adjacent Deansgate Interchange junction;
- Do not conflict with traffic signs;
- Benefit from good sightlines on the key approaches;
- Do not generally conflict with the motorist's view of the traffic signals at the 43m SSD from the stop lines at the A5067 Chorlton Road and both A56 Chester Road approaches;

- Do not conflict with the A57(M) southbound off-slip approach to the roundabout;
- Are not in conflict with the driver and active travel user sightlines to / from the controlled crossings at the Deansgate Interchange junction;
- Do not present a safety risk in terms of pedestrian and cycling movements; and
- Will not create an unacceptable impact in terms of driver distraction and risk to public safety for traffic passing the proposal site.

5.7 On review of the recent accident history in the vicinity of the proposal site, it is considered that there will not be a conflict with the proposal and the introduction of the digital advertising displays is not likely to exacerbate the existing accident record in this location.

5.8 There are UK examples of digital advertising displays in similar locations to the proposal site in the vicinity of roundabouts including traffic signal-controlled junctions, and along radial routes, which have successfully gained advertising approval.

Conclusion

5.9 Taking into account the findings of this Highway Safety Assessment report, the applicant considers that the proposed digital advertising scheme would not have an unacceptable or severe impact on highway safety at this location and is therefore not contrary to the National Planning Policy Framework (September 2023).

5.10 In conclusion, the proposal to erect four digital advertising screens at the Deansgate Interchange junction in Manchester, will not adversely impact on driver distraction, and so does not present a risk to road safety or a danger to road users. It is therefore considered that there are no significant transport reasons why the development proposals should not be granted planning permission.

Appendices

Appendix A Stage 1 Road Safety Audit and Designer's Response

PROPOSED DIGITAL ADVERTISING SCHEME.

DEANSGATE INTERCHANGE ROUNDABOUT, MANCHESTER

Stage 1 Road Safety Audit

September 2023

RW-LF-23-4180-RSA1

Report title:	Proposed Digital Advertising Scheme. Deansgate Interchange roundabout, Manchester. RSA 1
Date:	28 September 2023
Document reference and revision:	RW-LF-23-4180-RSA1
Prepared by:	The Safety Forum
On behalf of:	Manchester City Council

PO Box 831, Godalming, Surrey, GU7 9HT Tel: 01483 860999 enquiries@thesafetyforum.co.uk www.thesafetyforum.co.uk

Registered in England No.04514601. Registered office: Shackleford Suite, Mill Pool House, Mill Lane, Godalming, Surrey GU7 1EY

Revision Status	Prepared by: (Name)	Checked by: (Name)	Approved by: (Signature)	Date Approved:
Original	R Westhead	L Fogg		28th September 2023
Designer's Response				
Authority's Response				
Audit Response				

Client:	
SLR Consulting Limited	The Safety Forum Ltd
4th Floor Oxford Place, 61 Oxford Street, Manchester United Kingdom M1 6EQ	PO Box 831 Godalming Surrey GU7 9HT
	Date: 28th September 2023

TABLE OF CONTENTS

1.0 INTRODUCTION.....3
2.0 ITEMS CONSIDERED 5
3.0 MATTERS ARISING FROM THIS STAGE 1 AUDIT. 7
4.0 AUDIT TEAM STATEMENT.....12

APPENDIX A Location Plan

1.0 INTRODUCTION

1.1 This report results from a Stage 1 Road Safety Audit (RSA) carried out on the proposed roadside digital advertising boards on the Deansgate Interchange roundabout in Manchester.

1.2 The highway proposals include: '*The proposal is for four single-sided digital advertising displays within the four soft landscaped areas that comprise the central island of the Deansgate Interchange roundabout in Manchester. The digital screens will be directed towards the A5067 Chorlton Road, the A57(M) southbound off-slip and the A56 Chester Road east and west approaches at the roundabout'*.

1.3 It is understood from the RSA Brief that the digital advertising boards would be brought forward in accordance with the Transport for London (TfL) Guidance for Digital Roadside Advertising and Proposed Best Practice (March 2013). This guidance includes information on the operation of the images (i.e. static images only, rate of image changes, levels of luminance). It is therefore assumed that this site would operate within the guidance set out in this document.

1.4 The Stage 1 RSA was carried out at the request of Manchester City Council.

1.5 The Road Safety Audit Brief was supplied by SLR Consulting Ltd. The overseeing organisation is Manchester City Council. The RSA Brief was accepted by the Audit Team as adequate to complete the RSA.

1.6 The Audit was carried out between 20th and 28th September by consultants working on behalf of The Safety Forum Limited. The Audit Team, which is established from The Safety Forum Ltd and independent of the project design team, has had no involvement with the project.

The Auditors were:

R Westhead – Team Leader (MSoRSA, Certificate of Competency in RSA)

Lance Fogg – Team member (BSc (Eng)(Hons) DMS, CEng, MICE, FCIHT, FSoRSA (CoC)

1.7 The report has been prepared in accordance with General Principles and Scheme Governance General Information, GG 119, Road Safety Audit (Formerly HD 19/15).

1.8 The Audit consisted of a desktop study and a site visit. The site visit was carried out on Wednesday 20th September 2023, between 16:15 and 18:30 hours by all members of the Audit Team together. The weather was dry and sunny and the road surface was dry. Traffic conditions were busy. There was a steady flow of cycle and pedestrian traffic through the junction.

1.9 Issues relating to the health & safety of operatives constructing, operating or maintaining the highway are not covered by Road Safety Audit. Only issues relating to the design and construction of facilities for highway maintenance that may potentially contribute to a Road Safety Matter are considered by the Road Safety Audit process.

Road Safety Audit is not a technical check that the design conforms to Standards and/or best practice guidance. Design Organisations are responsible for ensuring that their designs have been subjected to the appropriate design reviews (including, where applicable, Walking, Cycling & Horse Riding Assessment & Review) prior to Road Safety Audit.

Road Safety Audit is not a check that the scheme has been constructed in accordance with the design.

Whilst reference is made to certain design standards, where safety may be compromised by a reduction in standard, this report is not intended to provide a design check. The Auditors have only reported on matters that might have an adverse effect on road safety in the context of the chosen design. No attempt has been made to comment on the justification of the scheme or the appropriateness of the design. Consequently, the Auditors accept no responsibility for the design or construction of the scheme.

1.10 The recommendations in this report are aimed at addressing the road safety problems; however there may be other alternative acceptable ways to overcome a specific problem, when other practical issues are considered. The recommendations contained herein do not absolve the Designer of his/her responsibilities.

1.11 The Overseeing Organisation response to the RSA should be formally recorded and reported to the Designer and the RSA Team so that a record of the Audit process is contained in the *As Built* design pack to be provided and retained by the Overseeing Organisation on final completion.

1.12 All problems identified in this Road Safety Audit Report are indicated on a location plan in Appendix A

2.0 ITEMS CONSIDERED

2.1 The Road Safety Audit was undertaken on the scheme detailed in the following documentation.

Drawing No.	Rev	Title
-	-	Road Safety Audit Brief
10293-SHP-RP-ST01	01	SUPPORTING DESIGN STATEMENT

simpsonhaugh

Chester Road Roundabout Advertising Screens
Planning Drawing List
10293-SHP-A-B5D7-Z330-SC-XX-001 Rev P01 Planning Issue 27/01/2023
January 2023

Planning Drawing Number	Revision		Scale @A1
EXISTING SITE			
Existing Plans			
10293-SHP-A-B5D7-G000-XP-00-001	P01	Site Location Plan	1:1000
10293-SHP-A-B5D7-G100-XP-00-001	P01	Existing Site Plan	1:250
10293-SHP-A-B5D7-G710-XP-XX-001	P01	Existing Landscape Plan	1:250
Existing Elevations			
10293-SHP-A-B5D7-G100-XE-XX-001	P01	Existing North & South Site Elevations	1:250
10293-SHP-A-B5D7-G100-XE-XX-002	P01	Existing East & West Site Elevations	1:250
GENERAL ARRANGEMENT			
Proposed Plans			
10293-SHP-A-B5D7-G100-PL-XX-001	P01	Proposed Site Plan	1:250
10293-SHP-A-B5D7-G100-PL-XX-101	P01	Line of Sight Plan	1:500
10293-SHP-A-B5D7-G710-PL-XX-001	P01	Proposed Landscape Plan	1:250
10293-SHP-A-B5D7-G200-PL-00-001	P01	Proposed Base Level Plans	1:50
10293-SHP-A-B5D7-G200-PL-01-001	P01	Proposed Lower Platform Level Plans	1:50
10293-SHP-A-B5D7-G200-PL-02-001	P01	Proposed Platform Level Plans	1:50
Elevations			
10293-SHP-A-B5D7-G100-EL-XX-001	P01	Proposed North & South Site Elevations	1:250
10293-SHP-A-B5D7-G100-EL-XX-001	P01	Proposed East & West Site Elevations	1:250
Details			
10293-SHP-A-B5D7-G200-DE-XX-001	P01	Landscape Screen Details (Screens B & D)	1:50
10293-SHP-A-B5D7-G200-DE-XX-002	P01	Portrait Screen Details (Screens A & C)	1:50
3D Visuals			
10293-SHP-A-B5D7-G200-3D-XX-001	P01	Indicative 3D View 01	NTS
10293-SHP-A-B5D7-G200-3D-XX-002	P01	Indicative 3D View 02	NTS
10293-SHP-A-B5D7-G200-3D-XX-003	P01	Indicative 3D View 03	NTS
10293-SHP-A-B5D7-G200-3D-XX-004	P01	Indicative 3D View 04	NTS
10293-SHP-A-B5D7-G200-3D-XX-005	P01	Indicative 3D View - Landscape Screen	NTS
10293-SHP-A-B5D7-G200-3D-XX-006	P01	Indicative 3D View - Portrait Screen	NTS
ADDITIONAL REPORTS			
10293-SHP-RP-ST01	P01	Design Statement	NTS

2.2 No departure from standards or other information was submitted to the Audit Team.

2.3 Collision data for the surrounding area has been provided for the period 01/01/20136-31/07/2023. This data covered the roundabout junction of the A56 and A57(M) / A57, including the underpass below the junction. The data also covered all approaches to a distance of approximately 100m on the A56 SW arm and Chorlton Road arm, to approximately 150m on the A57 Dawson St arm and approximately 150m on the A56 eastern arm. For the A57(m) arm of the roundabout the data

covered the immediate slip road interactions with the roundabout and approximately 25m of the A57(m) through traffic east of the roundabout circulatory.

Data for this period identified a total of 36 personal injury collisions. Of these:

- 33 resulted in slight injuries; 3 in serious injuries; and none in fatal injuries.
- Buses or public service vehicles were involved in 1 collision, powered two wheelers (motorcycles) were involved in 3 collisions, electric scooters were involved in 1 collision, pedal cycles were involved in 10 collisions, pedestrians were involved in 1 collision.
- 9 collisions were recorded in dark condition and 8 in wet conditions.
  A total of 47 casualties were recorded. Of these:
- 4 resulted in casualties aged under 16 years old.
- 11 were cycle casualties; 26 car occupants; 1 pedestrian; 5 PSV passengers.

Collision descriptions have been examined by the RSA Team for all 36 recorded collisions. These have been examined to understand whether there are any existing collision characteristics or patterns that could be exacerbated by the introduction of the proposed digital advertising boards.

A number of recorded collisions have been identified which would be highly unlikely to be affected by the introduction of the digital advertising boards. These include: those recorded on routes where the digital advertising boards could not be seen either due to being out of sight from that position or the direction of travel; and where the digital advertisement could be seen, but the collision description describes movements where drivers / riders / pedestrians would be unlikely to have been distracted by the digital advertising boards. Those collisions have therefore been omitted as likely to be affect the scheme proposals.

Of those collisions which were considered to be in locations where a view of the digital screen may be possible a number of locations were identified:

- A57 Dawson St, southbound approach and off-slip. 4 collisions. 3 southbound shunts around the off slip from the A57 to the Deansgate Interchange. 1 southbound shunt at end of slip road.
- A56 Chester Road SW bound approach to Deansgate Interchange. 2 SW bound shunts on Chester Road near junction with Great Jackson Street. 2 SW bound shunts on approach to traffic signals at Deansgate Interchange. 1 side to side collision as a vehicle changed lanes to the left on approach to roundabout.
- Deansgate Interchange circulatory carriageway near exit between Chester Road and A57(m) eastbound entry slip. A vehicle disobeyed the traffic signals and collided with a SW bound vehicle. Two vehicles collided side to side near to the A57(m) eastbound entry slip.
- Deansgate Interchange circulatory carriageway between Chorlton Road and Chester Road. 2 side to side lane change collisions on approaches to traffic signals. 1 collision involving a vehicle on the circulatory failing to heed traffic signals and colliding with a NE bound vehicle on Chester Road.

3.0 MATTERS ARISING FROM THIS STAGE 1 AUDIT.

3.1 PROBLEM

LOCATION: Chester Road SW bound approach to signals at roundabout.

SUMMARY: Nearside traffic signal head will be in front of digital advertising board on approach. Could result in failure to heed traffic signals.

It was noted that a SW bound vehicle on Chester Road approaching the roundabout and traffic signals will line up with the nearside traffic signal head and the proposed digital advertising board. It is thought that the relative locations of the board as well as the mounting height of board will mean that the traffic signal head will be in front of the digital advertising board for traffic in all lanes at some point on the approach, and for traffic in the left turn lane and lane one for an extended period.

When the traffic signal is in front of the digital advertising board it will be more difficult to see properly and hence may not be correctly heeded. The offside traffic signal heads could be masked by high sided vehicles and the traffic in the left turn nearside lane could fail to heed a red signal and enter the roundabout circulatory carriageway in conflict with other traffic or collide with a crossing user.

RECOMMENDATION

The position and height of the digital advertising board should be such that it is not placed directly behind the traffic signals at any point on the near approach to the junction so that it might distract from the traffic signals, crossing, or movements at the junction.

The view of a driver should be modelled through all traffic lanes on the approaches to ensure that the board is not behind the view of a driver to the traffic signals.

3.2 PROBLEM

LOCATION: SW bound cycle crossing. Refuge island between Chester Road ahead and left turn lanes on approach to roundabout.

SUMMARY: Possible see through to digital advertising board for cycles past cycle aspect signal head.

A cyclist waiting to cross the circulatory carriageway in the refuge island between Chester Road ahead and left turn lanes on the approach to roundabout may have their nearside cycle signal aspect in front of the digital advertising board on the eastern quadrant of the roundabout central island. This could result in a cyclist failing to interpret or read the signal correctly and entering the carriageway into the path of traffic.

RECOMMENDATION

Position the advertising board or signal aspect such that the board is not directly behind the cycle signal aspect when a cyclist is approaching it or waiting to cross. Should this not be possible then backing boards around the aspect may be beneficial.

3.3 PROBLEM

LOCATION: Chorlton Road northbound approach to signals.

SUMMARY: Position of digital advertising board will detract from traffic signals.

For traffic approaching the roundabout junction on Chorlton Road northbound the proposed digital advertising board will be located either between, very close or behind the traffic signal heads, and at a similar height for a significant distance on the approach to the junction. The RSA Team are concerned that this could pose a significant distraction for drivers approaching who may fail to correctly heed the traffic signals and may enter the roundabout into oncoming traffic; commence moving ahead leading to shunts in queues or collide with cyclists using the crossing.

RECOMMENDATION

Locate the digital advertising board such that it does not distract from the traffic signals for road users approaching the signals. It should be placed laterally and vertically so that it is not behind or in between traffic signals throughout the near approach to the junction.

3.4 PROBLEM

LOCATION: Crossings over circulatory carriageway, and the exit lanes from roundabout onto Chester Road SW bound.

SUMMARY: Possible to see through to digital advertising board for cycles and pedestrians past cycle / pedestrian signal aspects.

Pedestrians and cycles crossing NE bound from Chester Road over the circulatory carriageway and the SW bound exit lanes from the roundabout onto Chester Road may have their cycle or pedestrian signal aspect in front of the digital advertising board on the southern quadrant of the roundabout central island. This could result in a cyclist or pedestrian failing to interpret or read the signal correctly and entering the carriageway into the path of traffic.

RECOMMENDATION

Position the advertising board or signal aspects such that the board is not directly behind the signal aspects when a cyclist or pedestrian is approaching it or waiting to cross. Should this not be possible then backing boards around the aspect may be beneficial.

3.5 PROBLEM

LOCATION: Chester Road, NE bound approach to roundabout.

SUMMARY: Nearside traffic signal head will be in front of digital advertising board on approach. Could result in failure to heed traffic signals.

The proposed location of the digital advertising board on the NW quadrant of the roundabout will be in a position that will line up behind the line of sight of a driver to the nearside traffic signal head. This is likely to occur over a long distance on the approach to the junction for nearside traffic. It was also noted that visibility to the offside primary and secondary signals on this approach could easily be obscured by tall vehicles in the offside traffic lanes. This could mean that drivers in the nearside lanes have poor awareness of the signal stages, or the signals themselves. This could lead to vehicles entering the roundabout into the path of circulating traffic or into crossing users.

RECOMMENDATION

The position and height of the digital advertising board should be such that it is not placed directly behind the traffic signals at any point on the near approach to the junction so that it might distract from the traffic signals, crossing, or movements at the junction.

3.6 PROBLEM

LOCATION: Crossing over Chester Road from north to south.

SUMMARY: Possible see through to digital advertising board for cycles and pedestrians past cycle / pedestrian signal aspects.

Pedestrians and cycles crossing Chester Road north to south may have their cycle or pedestrian signal aspect in front of the digital advertising board on the eastern quadrant of the roundabout central island. The locations where this is of concern are on the northern kerbline, and within the island between the roundabout circulatory carriageway exit and Chester St through carriageway.

This could result in a cyclist or pedestrian failing to interpret or read the signal correctly and entering the carriageway into the path of traffic.

RECOMMENDATION

Position the advertising board or signal aspect such that the board is not directly behind the cycle signal aspect when a cyclist is approaching it or waiting to cross. Should this not be possible then backing boards around the aspect may be beneficial.

3.7 PROBLEM

LOCATION: A57 off-slip SE bound approach to roundabout.

SUMMARY: Possible distraction caused by digital advertising board that could increase risk of shunt type collisions.

The position of the digital advertising board on the northern quadrant of the roundabout is proposed to be placed so that is can be seen along the length of the A57 off-slip on the SE bound approach to roundabout. There appears to be some history of shunt type collisions occurring along this slip road. The RSA Team are concerned that the digital advertising board could add extra cognitive load onto vehicle drivers who are also negotiating weaving or exiting movements, queueing traffic, and give-way / stop start movements. This could increase the risk of shunt type collision occurring along the length of the slipe road.

RECOMMENDATION

Position the digital advertising board such that it does not align directly with the off-slip road.

4.0 AUDIT TEAM STATEMENT

4.1 We certify that this audit has been carried out in accordance with GG 119.

AUDIT TEAM LEADER
Name: R Westhead
Position: Director
The Safety Forum Ltd
PO Box 831
Godalming
Surrey
GU7 9HT

Signed:

Date: 28 September 2023

AUDIT TEAM MEMBER
Name: L Fogg
Position: Road Safety Consultant
The Safety Forum Ltd
PO Box 831
Godalming
Surrey
GU7 9HT

Signed:

Date: 28 September 2023

APPENDIX A: LOCATION PLAN

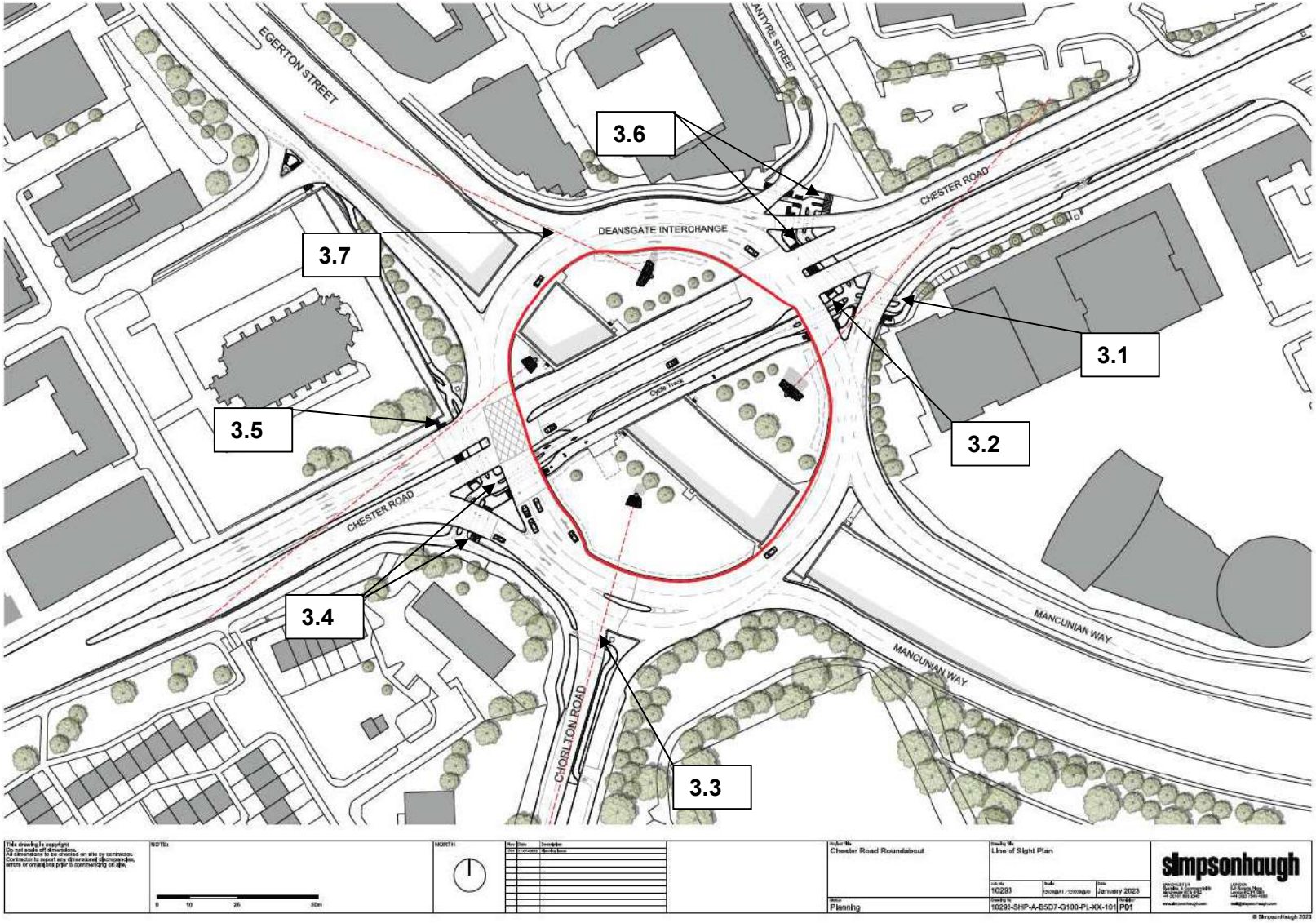
EGERTON STREET
ANTYRE STREET
CHESTER ROAD
DEANSGATE INTERCHANGE
Cycle Track
CHESTER ROAD
CHORLTON ROAD
MANCUNIAN WAY
MANCUNIAN WAY
3.1
3.2
3.3
3.4
3.5
3.6
3.7
Chester Road Roundabout
Line of Sight Plan
10293
January 2023
Planning
10293-SHP-A-B5D7-G100-PL-XX-101
P01
simpsonhaugh

vectos.
PART OF SLR

ROAD SAFETY AUDIT STAGE 1
DESIGNERS RESPONSE

Scheme Title	Proposed Digital Advertising Scheme at Deansgate Interchange Junction, Manchester
Client	Ocean Outdoor UK Ltd
RSA Report Ref No:	RW-LF-23-4180-RSA1
Road Safety Audit Team	The Safety Forum

Problem Identified Ref.	Problem Identified Description / Recommendation	Designers Response (Describe)
3.1	PROBLEM Chester Road SW bound approach to signals at roundabout. Nearside traffic signal head will be in front of digital advertising board on approach. Could result in failure to heed traffic signals. It was noted that a SW bound vehicle on Chester Road approaching the roundabout and traffic signals will line up with the nearside traffic signal head and the proposed digital advertising board. It is thought that the relative locations of the board as well as the mounting height of board will mean that the traffic signal head will be in front of the digital advertising board for traffic in all lanes at some point on the approach, and for traffic in the left turn lane and lane one for an extended period. When the traffic signal is in front of the digital advertising board it will be more difficult to see properly and hence may not be correctly heeded. The offside traffic signal heads could be masked by high sided vehicles and the traffic in the left turn nearside lane could fail to heed a red signal and enter the roundabout circulatory carriageway in conflict with other traffic or collide with a crossing user. RECOMMENDATION The position and height of the digital advertising board should be such that it is not placed directly behind the traffic signals at any point on the near approach to the junction so that it might distract from the traffic signals, crossing, or movements at the junction.	The driver sightline towards the proposal site (Location D digital advertising display) at the 43m Stopping Sight Distance (SSD) on the A56 Chester Road east approach to the stop lines (critical decision-making distance) has been reviewed in detail. As shown in Drawing VN232785-D100 Rev C, it is considered that the proposed advertising display position and the locations of the nearside and offside traffic signals that control this arm of the Deansgate Interchange junction will not interact in respect of approaching drivers at the 43m SSD for the 30mph approach speed, and there will be no safety conflict.

Problem Identified Ref.	Problem Identified Description / Recommendation	Designers Response (Describe)
3.2	PROBLEM SW bound cycle crossing. Refuge island between Chester Road ahead and left turn lanes on approach to roundabout. Possible see through to digital advertising board for cycles past cycle aspect signal head. A cyclist waiting to cross the circulatory carriageway in the refuge island between Chester Road ahead and left turn lanes on the approach to roundabout may have their nearside cycle signal aspect in front of the digital advertising board on the eastern quadrant of the roundabout central island. This could result in a cyclist failing to interpret or read the signal correctly and entering the carriageway into the path of traffic. RECOMMENDATION Position the advertising board or signal aspect such that the board is not directly behind the cycle signal aspect when a cyclist is approaching it or waiting to cross. Should this not be possible then backing boards around the aspect may be beneficial.	The proposal site (Location D digital advertising display) is positioned to the south of the nearside cycle signal aspect at this location. The height of the cycle signal will be below the digital advertising screen, which is raised approximately 3.2m above ground level, and so there will be no interaction or safety conflict. In addition, the bicycle signal heads at the crossing will be immediately adjacent to a cyclist waiting to cross, and the digital advertising display will not be in this visibility envelope.
3.3	PROBLEM Chorlton Road northbound approach to signals. Position of digital advertising board will detract from traffic signals. For traffic approaching the roundabout junction on Chorlton Road northbound the proposed digital advertising board will be located either between, very close or behind the traffic signal heads, and at a similar height for a significant distance on the approach to the junction. The RSA Team are concerned that this could pose a significant distraction for drivers approaching who may fail to correctly heed the traffic signals and may enter the roundabout into oncoming traffic; commence moving ahead leading to shunts in queues or collide with cyclists using the crossing. RECOMMENDATION Locate the digital advertising board such that it does not distract from the traffic signals for road users approaching the signals. It should be placed laterally and vertically so that it is not behind or in between traffic signals throughout the near approach to the junction.	The driver sightline towards the proposal site (Location C digital advertising display) at the 43m SSD on the Chorlton Road approach to the stop lines (critical decision-making distance) has been reviewed in detail. As shown in Drawing VN232785-D100 Rev C, it is considered that the proposed advertising display position and the locations of the nearside and offside traffic signals that control this arm of the Deansgate Interchange junction will not interact in respect of approaching drivers at the 43m SSD for the 30mph approach speed, and there will be no safety conflict.

Problem Identified Ref.	Problem Identified Description / Recommendation	Designers Response (Describe)
3.4	PROBLEM Crossings over circulatory carriageway, and the exit lanes from roundabout onto Chester Road SW bound. Possible to see through to digital advertising board for cycles and pedestrians past cycle / pedestrian signal aspects. Pedestrians and cycles crossing NE bound from Chester Road over the circulatory carriageway and the SW bound exit lanes from the roundabout onto Chester Road may have their cycle or pedestrian signal aspect in front of the digital advertising board on the southern quadrant of the roundabout central island. This could result in a cyclist or pedestrian failing to interpret or read the signal correctly and entering the carriageway into the path of traffic. RECOMMENDATION Position the advertising board or signal aspects such that the board is not directly behind the signal aspects when a cyclist or pedestrian is approaching it or waiting to cross. Should this not be possible then backing boards around the aspect may be beneficial.	The proposal site (Location C digital advertising display) is positioned to the southeast of the pedestrian and cycle signal aspects at this location, and the advertising screen will be angled in a southwest direction away from these signal aspects. The height of the pedestrian and cycle signals will be below the digital advertising screen, which is raised approximately 3.2m above ground level, and so there will be no interaction or safety conflict. The bicycle signal heads at the crossing will be immediately adjacent to a cyclist waiting to cross, and the digital advertising display will not be in this visibility envelope. In addition, the proposed digital display will be enclosed by a cowl design and setback within the hood, and this will minimise the interaction of the advertising screen with these signal aspects.
3.5	PROBLEM Chester Road, NE bound approach to roundabout. Nearside traffic signal head will be in front of digital advertising board on approach. Could result in failure to heed traffic signals. The proposed location of the digital advertising board on the NW quadrant of the roundabout will be in a position that will line up behind the line of sight of a driver to the nearside traffic signal head. This is likely to occur over a long distance on the approach to the junction for nearside traffic. It was also noted that visibility to the offside primary and secondary signals on this approach could easily be obscured by tall vehicles in the offside traffic lanes. This could mean that drivers in the nearside lanes have poor awareness of the signal stages, or the signals themselves. This could lead to vehicles entering the roundabout into the path of circulating traffic or into crossing users. RECOMMENDATION The position and height of the digital advertising board should be such that it is not placed directly behind the traffic signals at any point on the near approach to the junction so that it might distract from the traffic signals, crossing, or movements at the junction.	The driver sightline towards the proposal site (Location A digital advertising display) at the 43m SSD on the A56 Chester Road west approach to the stop lines (critical decision-making distance) has been reviewed in detail. As shown in Drawing VN232785-D100 Rev C, it is considered that the proposed advertising display position and the locations of the offside primary and secondary traffic signals that control this arm of the Deansgate Interchange junction will not interact in respect of approaching drivers at the 43m SSD for the 30mph approach speed. The advertising screen position and the location of the nearside primary traffic signal on this arm will not interact in respect of approaching drivers in the nearside and offside lanes.

Problem Identified Ref.	Problem Identified Description / Recommendation	Designers Response (Describe)
3.6	PROBLEM Crossing over Chester Road from north to south. Possible see through to digital advertising board for cycles and pedestrians past cycle / pedestrian signal aspects. Pedestrians and cycles crossing Chester Road north to south may have their cycle or pedestrian signal aspect in front of the digital advertising board on the eastern quadrant of the roundabout central island. The locations where this is of concern are on the northern kerb line, and within the island between the roundabout circulatory carriageway exit and Chester St through carriageway. This could result in a cyclist or pedestrian failing to interpret or read the signal correctly and entering the carriageway into the path of traffic. RECOMMENDATION Position the advertising board or signal aspect such that the board is not directly behind the cycle signal aspect when a cyclist is approaching it or waiting to cross. Should this not be possible then backing boards around the aspect may be beneficial.	The proposal site (Location D digital advertising display) is positioned to the south of the pedestrian and cycle signal aspects at this location, and the advertising screen will be angled in an eastern direction away from these signal aspects. The height of the pedestrian and cycle signals will be below the digital advertising screen, which is raised approximately 3.2m above ground level, and so there will be no interaction or safety conflict. The bicycle signal heads at the crossing will be immediately adjacent to a cyclist waiting to cross, and the digital advertising display will not be in this visibility envelope. In addition, the proposed digital display will be enclosed by a cowl design and setback within the hood, and this will minimise the interaction of the advertising screen with these signal aspects.
3.7	PROBLEM A57 off-slip SE bound approach to roundabout. Possible distraction caused by digital advertising board that could increase risk of shunt type collisions. The position of the digital advertising board on the northern quadrant of the roundabout is proposed to be placed so that is can be seen along the length of the A57 off-slip on the SE bound approach to roundabout. There appears to be some history of shunt type collisions occurring along this slip road. The RSA Team are concerned that the digital advertising board could add extra cognitive load onto vehicle drivers who are also negotiating weaving or exiting movements, queueing traffic, and give-way / stop start movements. This could increase the risk of shunt type collision occurring along the length of the slipe road. RECOMMENDATION Position the digital advertising board such that it does not align directly with the off-slip road.	Due to the relatively straight alignment of the carriageway towards the proposal site, it is considered that drivers will have good visibility and a clear sight line towards the advertising display position from around 150m to the north. This is an appropriate forward visibility distance for the speed of the road, which would give sufficient time for the proposal's contents to be assimilated without surprise. Drivers on the approach to the give way line at the entry to the roundabout will be aware of the of the digital display in advance of the junction and given its location in the driver's eye line, the advertising screen will be visible in the same view as drivers looking ahead. Vehicles exiting the priority junction will be giving way to traffic on the roundabout circulatory that is approaching from the southwest, and the proposed advertising displays at Locations A and B will not conflict with this sightline.

Appendix B Proposed Digital Advertising Scheme Planning Drawings

This drawing is copyright
Do not scale off dimensions.
All dimensions to be checked on site by contractor.
Contractor to report any dimensional discrepancies, errors or omissions prior to commencing on site.

NOTE:

0 10 20 50 100m

NORTH

Rev	Date	Description
P01	27-01-2023	Planning Issue

Project Title
Chester Road Roundabout

Drawing Title
Site Location Plan

Job No	Scale	Date
10293	1:1000@A1 / 1:2000@A3	January 2023

Status
Planning

Drawing No
10293-SHP-A-B5D7-G000-XP-00-001

Revision
P01

simpsonhaugh

MANCHESTER
Riverside, 4 Commercial St
Manchester M15 4RQ
+44 (0)161 835 2345

LONDON
5-8 Roberts Place
London EC1R 0BB
+44 (0)20 7549 4000

www.simpsonhaugh.com
mail@simpsonhaugh.com

© SimpsonHaugh 2023

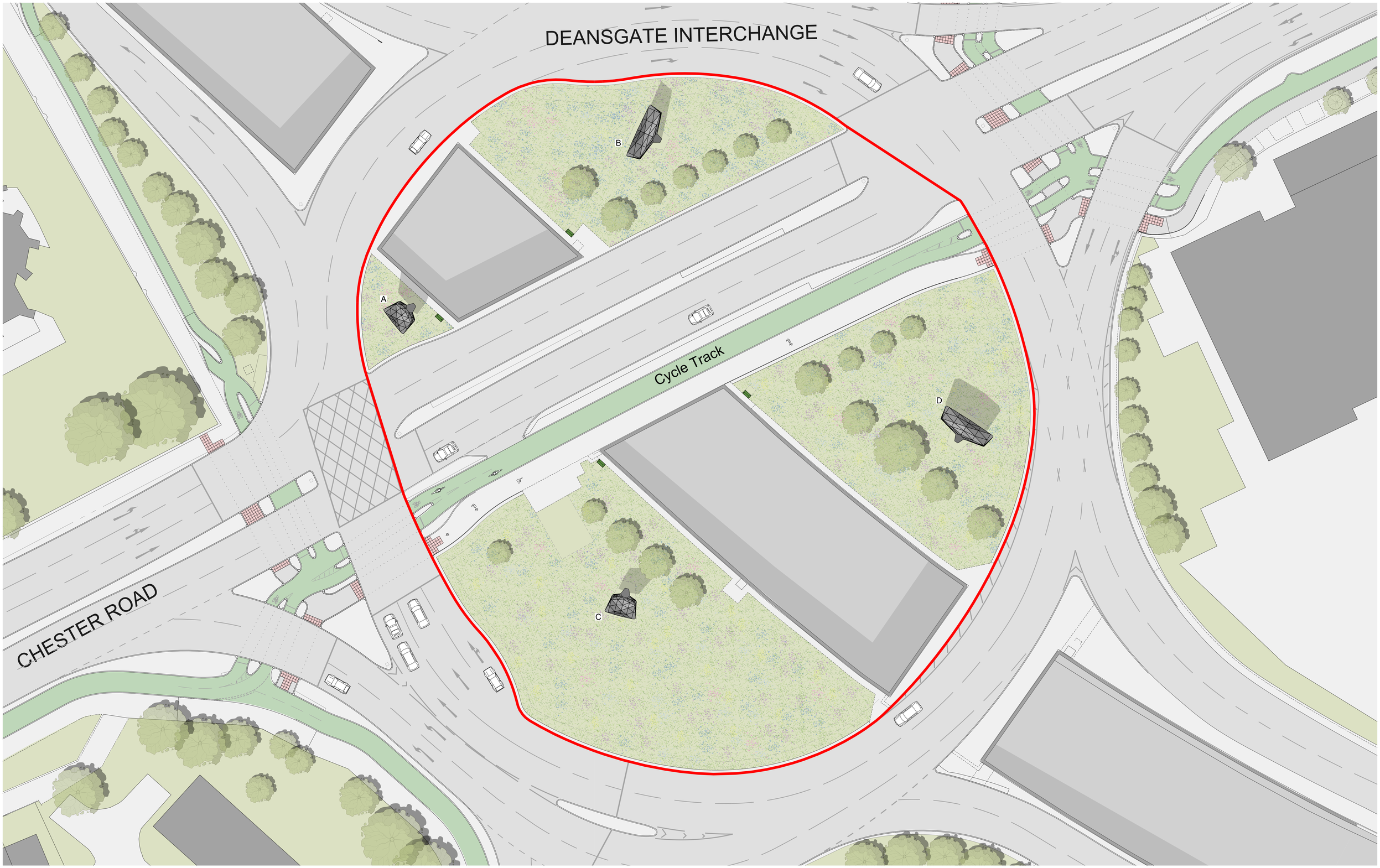

This drawing is copyright
Do not scale off dimensions.
All dimensions to be checked on site by contractor.
Contractor to report any dimensional discrepancies, errors or omissions prior to commencing on site.

NOTE:

0 5 10 15 25m

NORTH

Rev	Date	Description
P01	27-01-2023	Planning Issue
P02	12-01-2024	Planning Issue - Revised Screen Locations

Project Title
Chester Road Roundabout

Drawing Title
Proposed Site Plan

Job No
10293

Scale
1:250@A1 / 1:500@A3

Date
January 2023

Status
Planning

Drawing No
10293-SHP-A-B5D7-G100-PL-XX-001

Revision
P02

simpsonhaugh

MANCHESTER
Riverside, 4 Commercial St
Manchester M15 4RQ
+44 (0)161 835 2345

LONDON
5-8 Roberts Place
London EC1R 0BB
+44 (0)20 7549 4000

www.simpsonhaugh.com
mail@simpsonhaugh.com

© SimpsonHaugh 2023

Key

1. Perforated Aluminium Cladding Panels. Colour - Grey.
2. Aluminium Cladding Panels. Colour - Grey.
3. Structural Steel Support Stand. Colour - Grey
4. 3660mm x 7320mm LED Display
5. Internal Maintenance Platform with Hatch Access
6. Internal Maintenance Access Ladder

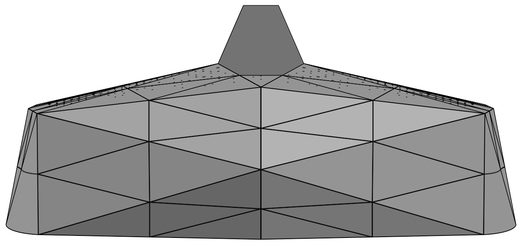

ROOF PLAN

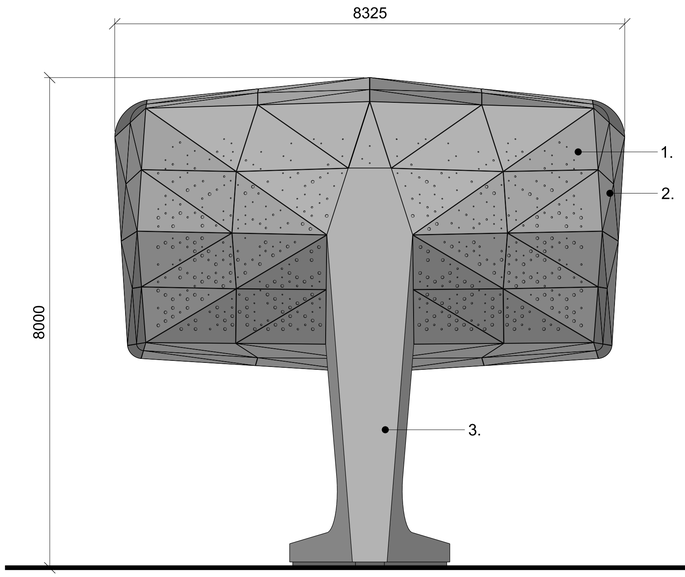

REAR ELEVATION

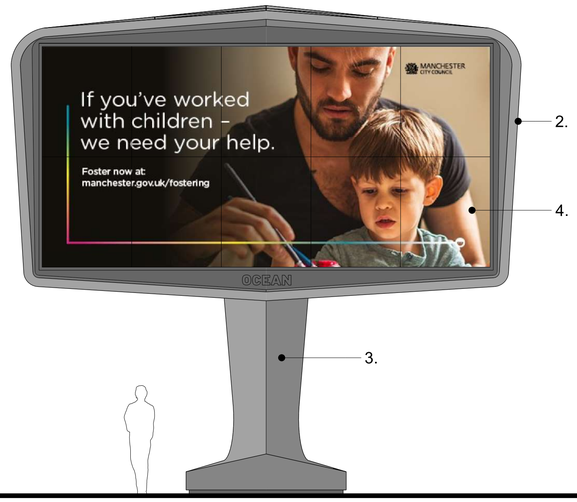

FRONT ELEVATION

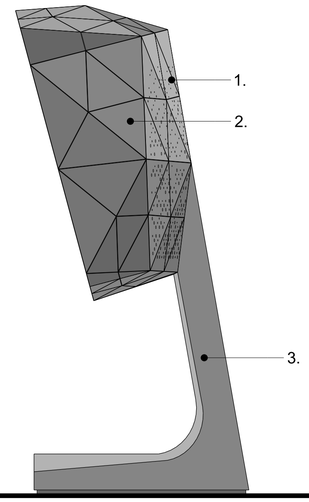

SIDE ELEVATION

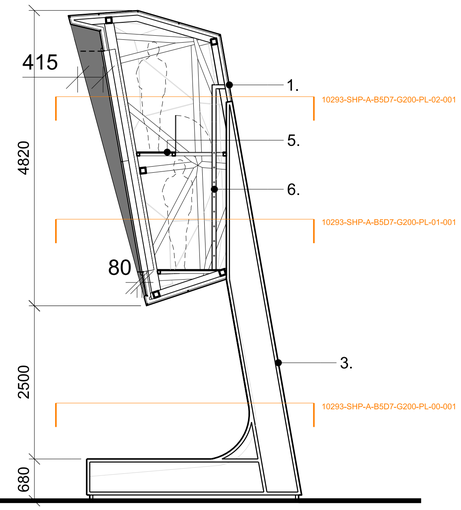

SECTION

This drawing is copyright
Do not scale off dimensions.
All dimensions to be checked on site by contractor.
Contractor to report any dimensional discrepancies, errors or omissions prior to commencing on site.

NOTE:

0 1 2 5m

NORTH

Rev	Date	Description
P01	27-01-2023	Planning Issue

Project Title: Chester Road Roundabout

Status: Planning

Drawing Title: Landscape Screen Details (Screens B & D) (Roof Plan, Section & Elevations)

Job No	Scale	Date
10293	1:50@A1 / 1:100@A3	January 2023

Drawing No	Revision
10293-SHP-A-B5D7-G200-DE-XX-001	P01

simpsonhaugh

MANCHESTER
Riverside, 4 Commercial St
Manchester M15 4RQ
+44 (0)161 835 2345

LONDON
5-8 Roberts Place
London EC1R 0BB
+44 (0)20 7549 4000

www.simpsonhaugh.com
mail@simpsonhaugh.com

© SimpsonHaugh 2023

Key

1. Perforated Aluminium Cladding Panels. Colour - Grey.
2. Aluminium Cladding Panels. Colour - Grey.
3. Structural Steel Support Stand. Colour - Grey
4. 5850mm x 3290mm LED Display
5. Internal Maintenance Platform with Hatch Access
6. Internal Maintenance Access Ladder

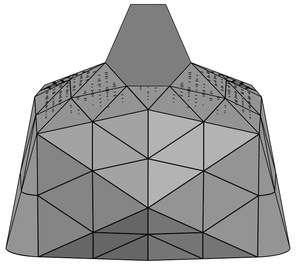

ROOF PLAN

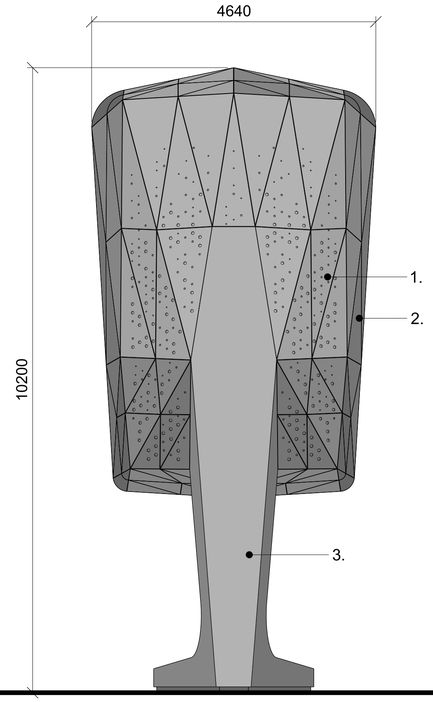

REAR ELEVATION

FRONT ELEVATION

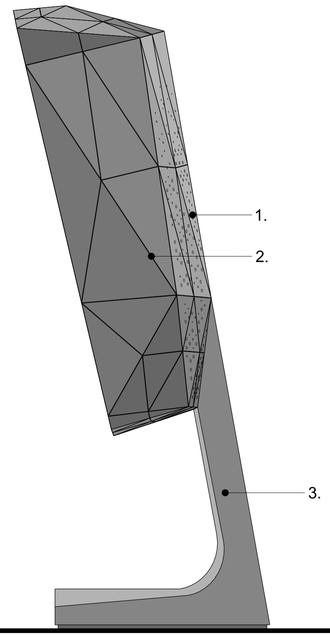

SIDE ELEVATION

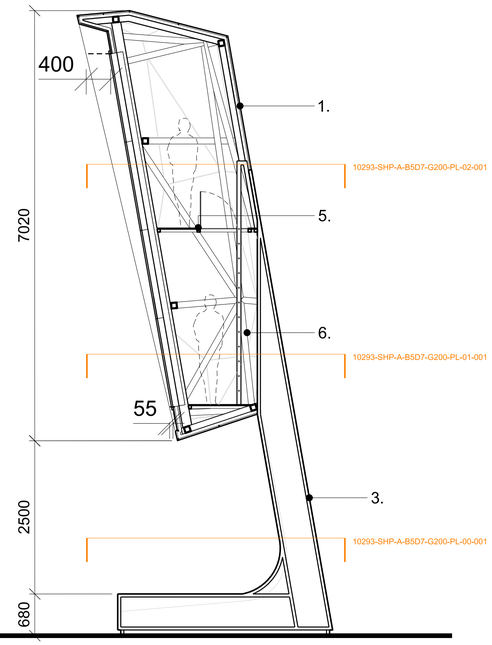

SECTION

This drawing is copyright
Do not scale off dimensions.
All dimensions to be checked on site by contractor.
Contractor to report any dimensional discrepancies, errors or omissions prior to commencing on site.

NOTE:

0 1 2 5m

NORTH

Rev	Date	Description
P01	27-01-2023	Planning Issue

Project Title: Chester Road Roundabout

Status: Planning

Drawing Title: Portrait Screen Details (Screens A & C) (Roof Plan, Section & Elevations)

Job No	Scale	Date
10293	1:50@A1 / 1:100@A3	January 2023

Drawing No: 10293-SHP-A-B5D7-G200-DE-XX-002

Revision: P01

simpsonhaugh

MANCHESTER
Riverside, 4 Commercial St
Manchester M15 4RQ
+44 (0)161 835 2345

LONDON
5-8 Roberts Place
London EC1R 0BB
+44 (0)20 7549 4000

www.simpsonhaugh.com
mail@simpsonhaugh.com

© SimpsonHaugh 2023

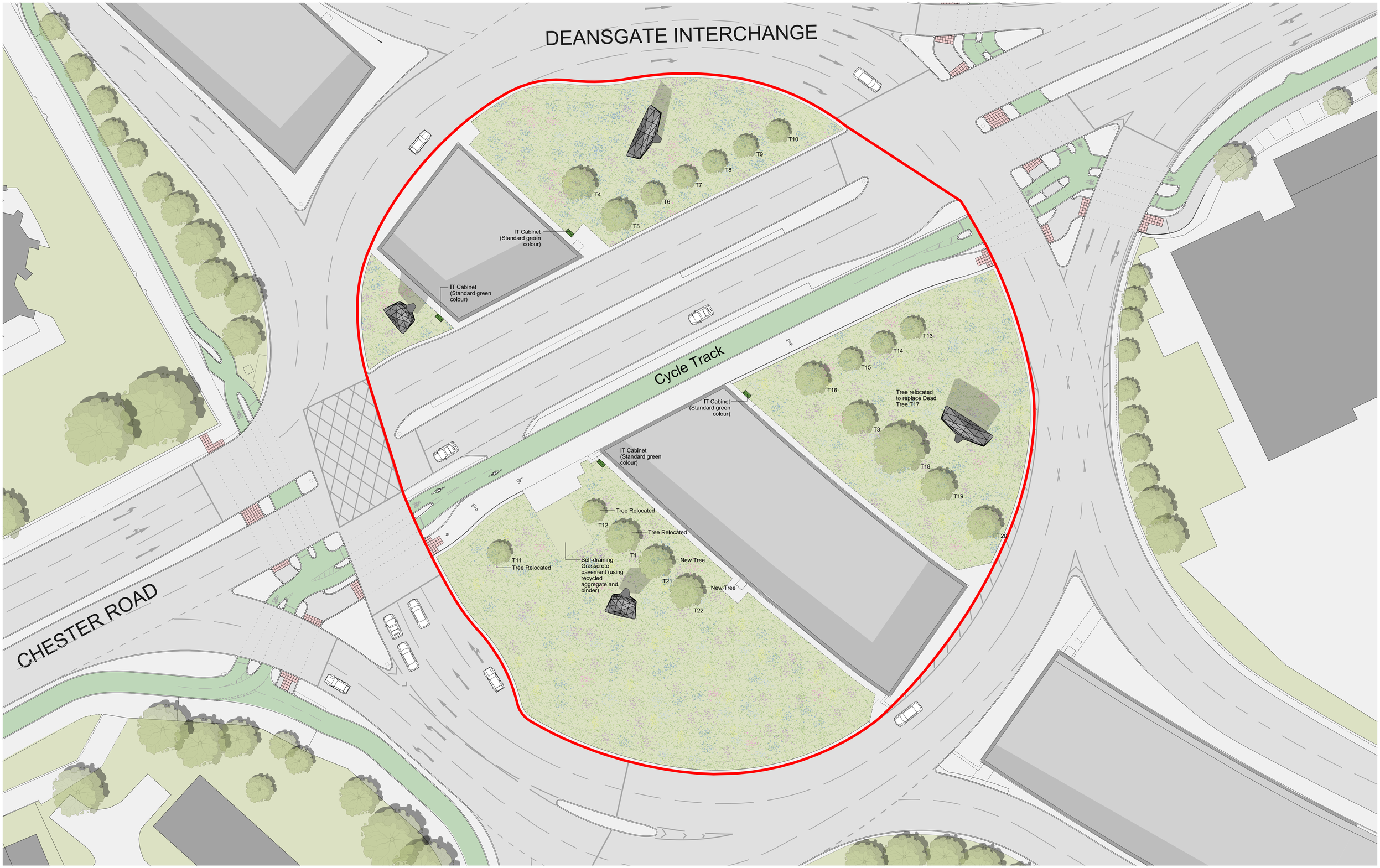

This drawing is copyright
Do not scale off dimensions.
All dimensions to be checked on site by contractor.
Contractor to report any dimensional discrepancies, errors or omissions prior to commencing on site.

NOTE:

Exact positions of new and relocated trees subject to review of subterranean services

0 5 10 15 25m

NORTH

Rev	Date	Description
P01	27-01-2023	Planning Issue
P02	12-01-2024	Planning Issue - Revised Screen Locations

Project Title
Chester Road Roundabout

Drawing Title
Proposed Landscape Plan

Job No	Scale	Date
10293	1:250@A1 / 1:500@A3	January 2023

Status
Planning

Drawing No
10293-SHP-A-B5D7-G710-PL-XX-001

Revision
P02

simpsonhaugh

MANCHESTER
Riverside, 4 Commercial St
Manchester M15 4RQ
+44 (0)161 835 2345
www.simpsonhaugh.com

LONDON
5-8 Roberts Place
London EC1R 0BB
+44 (0)20 7549 4000
mail@simpsonhaugh.com

© SimpsonHaugh 2023

Appendix C Accident Data Output Files

TRANSPORT FOR GREATER MANCHESTER

Transport for Greater Manchester

Traffic Accident Data for

DTA Transportation

Reported Road Injury Accidents in Specified Area of Deansgate Interchange Roundabout, Manchester, 01/01/2016 to 31/07/2023

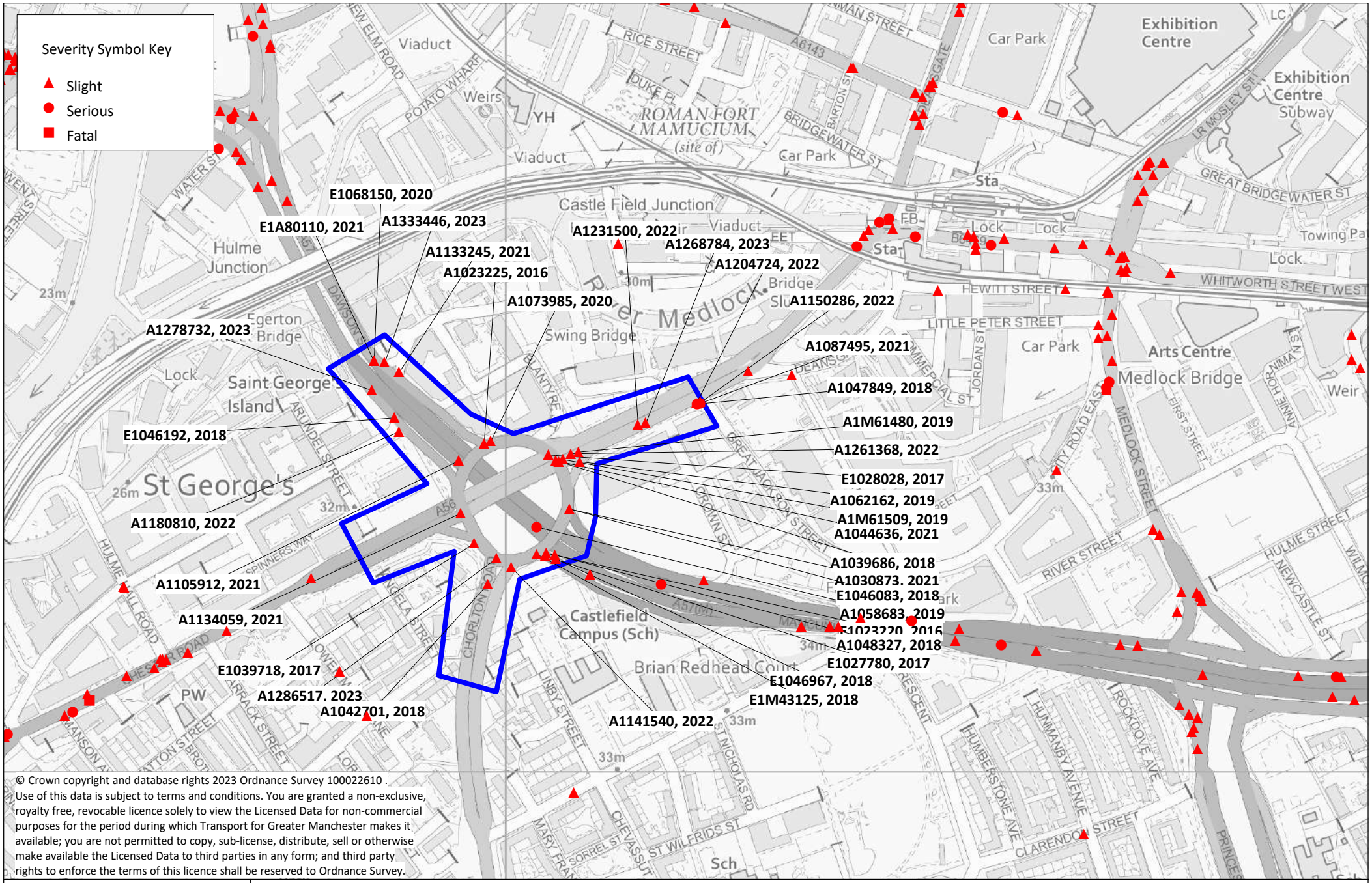

© Crown copyright and database rights 2023 Ordnance Survey 100022610 .
Use of this data is subject to terms and conditions. You are granted a non-exclusive, royalty free, revocable licence solely to view the Licensed Data for non-commercial purposes for the period during which Transport for Greater Manchester makes it available; you are not permitted to copy, sub-license, distribute, sell or otherwise make available the Licensed Data to third parties in any form; and third party rights to enforce the terms of this licence shall be reserved to Ordnance Survey.

Transport for Greater Manchester
2 Piccadilly Place,
Manchester,
M1 3BG

Reported Injury Accidents in Specified Area of Deansgate Interchange Roundabout, Manchester, 01/01/2016 to 31/07/2023

Drawn By : liuj	Note: A road accident which occurs at or within 20m of a junction, is coded as a junction accident	Date : 08/09/2023

TRANSPORT FOR GREATER MANCHESTER

Reported Road Injury Accidents in Specified Area of Deansgate Interchange Roundabout, Manchester, 01/01/2016 to 31/07/2023

Injury Accidents	2016	2017	2018	2019	2020	2021	2022	Jan - Jul 2023	Total
Fatal	0	0	0	0	0	0	0	0	0
Serious	0	0	1	1	0	1	0	0	3
Slight	2	3	7	3	2	6	6	4	33
Total	2	3	8	4	2	7	6	4	36

Standard Totals Report : Reported Injury Accidents in Specified Area of Deansgate Interchange Roundabout, Manchester, 01/01/2016 to 31/07/2023

Accidents

Serious	3
Slight	33
Total Accidents	**36**

Casualties By Age and Sex

Severity	0 - 15	16 - 59	60 - 69	70 +	Total
Serious					
Male	0	2	0	0	2
Female	0	1	0	0	1
Total	**0**	**3**	**0**	**0**	**3**
Slight					
Male	0	27	1	1	29
Female	4	11	0	0	15
Total	**4**	**38**	**1**	**1**	**44**
Total Casualties	**4**	**41**	**1**	**1**	**47**

Casualties By Age and Class

Severity	0 - 15	16 - 59	60 - 69	70 +	Total
Serious					
Driver or rider	0	3	0	0	3
Total	**0**	**3**	**0**	**0**	**3**
Slight					
Driver or rider	0	32	1	1	34
Veh or pillion pas	4	5	0	0	9
Pedestrian	0	1	0	0	1
Total	**4**	**38**	**1**	**1**	**44**
Total Casualties	**4**	**41**	**1**	**1**	**47**

Cyclist (Rider and Pillion) and Pedestrian Casualties By Age

Severity	0 - 15	16 - 59	60 - 69	70 +	Total
Serious	0	1	0	0	1
Slight	0	9	1	0	10
Total Casualties	**0**	**10**	**1**	**0**	**11**

Casualties Broken Down By Type

Car (Driver)	**0-15**	**16+**	**Total**
Slight	0	23	23
Total	**0**	**23**	**23**
Car (Passenger)	**0-15**	**16+**	**Total**
Slight	1	3	4
Total	**1**	**3**	**4**
Pedestrian	**0-15**	**16+**	**Total**
Slight	0	1	1
Total	**0**	**1**	**1**
TWPV (Rider)	**0-15**	**16+**	**Total**
Serious	0	1	1
Slight	0	2	2
Total	**0**	**3**	**3**
Cyclist (Rider)	**0-15**	**16+**	**Total**
Serious	0	1	1
Slight	0	9	9
Total	**0**	**10**	**10**
PSV (Passenger)	**0-15**	**16+**	**Total**
Slight	3	2	5
Total	**3**	**2**	**5**
Other (Driver)	**0-15**	**16+**	**Total**
Serious	0	1	1
Total	**0**	**1**	**1**
Total	**4**	**43**	**47**

Standard Report - Reported Injury Accidents in Specified Area of Deansgate Interchange Roundabout, Manchester, 01/01/2016 to 31/07/2023

This printout has been generated from the Transport for Greater Manchester's database of road traffic accident records using the query system, GMAXI.

The road traffic accident database contains STATS19 data supplied by Greater Manchester Police and further validated by the Highways Forecasting and Analytical Services (HFAS) section of Transport for Greater Manchester. It is maintained by HFAS on behalf of the ten District Councils in Greater Manchester.

This information is provided for the sole use of the recipient. It may not be sold, lent, hired out, or in any other way disclosed to a third party nor may it be reproduced in any form which may be obtained by a third party.

Accident Reference Number: A1278732 **Day:** Tuesday **Date:** 31/01/2023 **Time:** 19:00

Place Reported: Self **District:** Manchester

Location: Egerton Street 25 metres SE Of Mancunian Way

Description: Both Vehs Trav Nw Egerton St, V2 Staty In Traffic, V1 (LGV) Fails To React & Front Collides With Rear Of V2. V1 Fts

Contributory Factors

Factor	Conf	Ref

Vehicle Details

Type	Move	From	To	Skid
LGV	Ahead	SE	NW	
Car	Stopg	SE	NW	

Casualty Details

Type	Sex	Age	Sev	Pupil
1 Drv	M	23	Slight	Un

Locational Details

Road:	A57	Junction Details:	
OSGR:	382863 397391	Junction Control:	n/a
Speed Limit:	30	Ped Crossing:	

Conditions

Road Surface:	Dry
Light Conditions:	Dark
Weather Conditions:	Fine

Accident Details

Severity:	Slight
No. of Vehicles:	2
No. of Casualties:	1

Accident Reference Number: E1068150 **Day:** Saturday **Date:** 18/01/2020 **Time:** 23:09

Place Reported: Else **District:** Manchester

Location: Dawson Street 20 metres NW Of Mancunian Way

Description: Both Vehs Trav Se Dawson St, V1 Runs Into Back Of V2. V1 Fts

Contributory Factors

Factor	Conf	Ref

Vehicle Details

Type	Move	From	To	Skid
Car	Ahead	NW	SE	
Car	Ahead	NW	SE	

Casualty Details

Type	Sex	Age	Sev	Pupil
1 Drv	M	39	Slight	

Locational Details

Road:	A57/A57(M)	Junction Details:	Slip
OSGR:	382865 397421	Junction Control:	GW
Speed Limit:	40	Ped Crossing:	

Conditions

Road Surface:	Dry
Light Conditions:	Dark
Weather Conditions:	Fine

Accident Details

Severity:	Slight
No. of Vehicles:	2
No. of Casualties:	1

Accident Reference Number: E1A80110 **Day:** Saturday **Date:** 23/01/2021 **Time:** 14:50
Place Reported: Else **District:** Manchester
Location: Mancunian Way 20 metres NW Of Egerton Street Off-slip Road
Description: All Vehs Trav Se Mancunian Way. Veh In Front Stops, V3 & V2 Slow Down, V1 Trav Behind Collides With Rear Of V2, V2 Then Shunts Into Rear Of V3

Locational Details

Road:	A57(M)/A57	Junction Details:	Slip
OSGR:	382865 397421	Junction Control:	GW
Speed Limit:	40	Ped Crossing:	

Conditions

Road Surface:	Wet
Light Conditions:	Light
Weather Conditions:	Fine

Accident Details

Severity:	Slight
No. of Vehicles:	3
No. of Casualties:	1

Contributory Factors

Factor	Conf	Ref

Vehicle Details

Type	Move	From	To	Skid
Car	Ahead	NW	SE	
Car	Stopg	NW	SE	
Car	Stopg	NW	SE	

Casualty Details

	Type	Sex	Age	Sev	Pupil
1	Drv	M	44	Slight	

Accident Reference Number: A1333446 **Day:** Friday **Date:** 21/07/2023 **Time:** 10:45
Place Reported: Self **District:** Manchester
Location: Egerton Street at junction with Blantyre Street
Description: V1 Trav Se On Egerton St Turns Left Across Path Of V2 (Pedal Cycle) Trav Same Dir In Cycle Lane. Front Of V1 Collides With Offside Of V2

Locational Details

Road:	A57/U	Junction Details:	Tjun
OSGR:	382876 397420	Junction Control:	GW
Speed Limit:	40	Ped Crossing:	

Conditions

Road Surface:	Dry
Light Conditions:	Light
Weather Conditions:	Fine

Accident Details

Severity:	Slight
No. of Vehicles:	2
No. of Casualties:	1

Contributory Factors

Factor	Conf	Ref
DFLoo	VLike	V1
DTurn	VLike	V1

Vehicle Details

Type	Move	From	To	Skid
Car	TurnL	NW	NE	
p/c	Ahead	NW	SE	

Casualty Details

	Type	Sex	Age	Sev	Pupil
1	Rid	M	30	Slight	Un

Accident Reference Number: E1046192 **Day:** Tuesday **Date:** 17/07/2018 **Time:** 16:20
Place Reported: Else **District:** Manchester
Location: Egerton Street at junction with Ellesmere Street
Description: V1 Trav Ne Ellesmere St Turns Left Onto Egerton St And Collides With V2 (Pedal Cycle) Trav Se Egerton St Wrong Way In Cycle Lane

Locational Details

Road:	A57/U	Junction Details:	Tjun
OSGR:	382886 397363	Junction Control:	GW
Speed Limit:	30	Ped Crossing:	

Conditions

Road Surface:	Dry
Light Conditions:	Light
Weather Conditions:	Fine

Accident Details

Severity:	Slight
No. of Vehicles:	2
No. of Casualties:	1

Contributory Factors

Factor	Conf	Ref
DTurn	VLike	V2
DFLoo	VLike	V2
DJudge	VLike	V2

Vehicle Details

Type	Move	From	To	Skid
Car	TurnL	SW	NW	
p/c	Ahead	NW	SE	

Casualty Details

	Type	Sex	Age	Sev	Pupil
1	Rid	M	30	Slight	

Accident Reference Number: A1180810 **Day:** Friday **Date:** 20/05/2022 **Time:** 08:25
Place Reported: Self **District:** Manchester
Location: Ellesmere Street at junction with Egerton Street
Description: V1 Trav Nw Egerton St Turns Left Onto Ellesmere St, V2 (Pedal Cycle) Trav Nw-bd On Central Refuge Of Ellesmere St, N/s Of V1 Collides With O/s Of V2. V1 Fts

Locational Details

Road:	U/A57	Junction Details:	Tjun
OSGR:	382891 397349	Junction Control:	GW
Speed Limit:	30	Ped Crossing:	Ref

Conditions

Road Surface:	Dry
Light Conditions:	Light
Weather Conditions:	Fine

Accident Details

Severity:	Slight
No. of Vehicles:	2
No. of Casualties:	1

Contributory Factors

Factor	Conf	Ref

Vehicle Details

Type	Move	From	To	Skid
Car	TurnL	SE	SW	
p/c	Ahead	SE	NW	

Casualty Details

	Type	Sex	Age	Sev	Pupil
1	Rid	M	36	Slight	Un

Accident Reference Number: A1133245 **Day:** Friday **Date:** 05/11/2021 **Time:** 13:28
Place Reported: Else **District:** Manchester
Location: Blantyre Street at junction with Egerton Street
Description: V1 Trav Sw Blantyre St. V2 (Pedal Cycle) Trav Nw-bd Across Blantyre St. As V1 Turns Left Onto Egerton St & N/s Collides With N/s Of V2

Contributory Factors

Factor	Conf	Ref

Vehicle Details

Type	Move	From	To	Skid
Car	TurnL	NE	SE	
p/c	Ahead	SE	NW	

Casualty Details

Type	Sex	Age	Sev	Pupil
1 Rid	M	60	Slight	Un

Locational Details

Road:	U/A57	Junction Details:	Tjun
OSGR:	382891 397410	Junction Control:	GW
Speed Limit:	30	Ped Crossing:	

Conditions

Road Surface:	Dry
Light Conditions:	Light
Weather Conditions:	Fine

Accident Details

Severity:	Slight
No. of Vehicles:	2
No. of Casualties:	1

Accident Reference Number: A1105912 **Day:** Monday **Date:** 04/10/2021 **Time:** 08:00
Place Reported: Else **District:** Manchester
Location: Mancunian Way 142 metres SE Of Dawson Street
Description: Both Vehs Trav N Mancunian Way. V1 Skidded & O/s Collides With N/s Of V2. V1 Fts

Contributory Factors

Factor	Conf	Ref

Vehicle Details

Type	Move	From	To	Skid
Car	Ahead	SE	N	Skid
Car	Ahead	SE	N	

Casualty Details

Type	Sex	Age	Sev	Pupil
1 Drv	F	26	Slight	Un

Locational Details

Road:	A57(M)	Junction Details:	
OSGR:	382952 397319	Junction Control:	n/a
Speed Limit:	50	Ped Crossing:	

Conditions

Road Surface:	Dry
Light Conditions:	Light
Weather Conditions:	Fine

Accident Details

Severity:	Slight
No. of Vehicles:	2
No. of Casualties:	1

Accident Reference Number: A1134059 **Day:** Friday **Date:** 24/09/2021 **Time:** 10:19
Place Reported: Scene **District:** Manchester
Location: Chester Road Roundabout at juction with Chester Road
Description: V1 Trav Nw On Chester Rd Rdabt From A57(M) At Speed. V1 Trav Ne Chester Rd. Driver Of V1 Continues Thru Red Ats Across Jct Fails To Look & Front Hits Front Of V2

Contributory Factors

Factor	Conf	Ref
DFLoo	VLike	V1
DCare	Poss	V1
DATS	VLike	V1
DFast	VLike	V1

Vehicle Details

Type	Move	From	To	Skid
Car	Ahead	SE	NW	
Car	Ahead	SW	NE	

Casualty Details

Type	Sex	Age	Sev	Pupil
1 Drv	M	70	Slight	Un

Locational Details

Road:	A56/A56	Junction Details:	Rdbt
OSGR:	382954 397265	Junction Control:	TS
Speed Limit:	30	Ped Crossing:	TSX

Conditions

Road Surface:	Wet
Light Conditions:	Light
Weather Conditions:	Fine

Accident Details

Severity:	Slight
No. of Vehicles:	2
No. of Casualties:	1

Accident Reference Number: E1039718 **Day:** Tuesday **Date:** 19/12/2017 **Time:** 08:30
Place Reported: Else **District:** Manchester
Location: Deansgate Interchange Roundabout at junction with Chester Road
Description: Both Vehs Trav Nw On Rnbt. V2 Moves To Enter Chester Rd. V1 Changes Lane To Right & Collides With O/s Of V2. V1 FTS

Contributory Factors

Factor	Conf	Ref

Vehicle Details

Type	Move	From	To	Skid
Car	chlnR	SE	NW	
Car	TurnL	SE	SW	

Casualty Details

Type	Sex	Age	Sev	Pupil
1 Drv	F	39	Slight	

Locational Details

Road:	A56/A56	Junction Details:	Rdbt
OSGR:	382968 397234	Junction Control:	TS
Speed Limit:	30	Ped Crossing:	TSX

Conditions

Road Surface:	Wet
Light Conditions:	Light
Weather Conditions:	Rain

Accident Details

Severity:	Slight
No. of Vehicles:	2
No. of Casualties:	1

Accident Reference Number: A1023225 **Day:** Thursday **Date:** 27/10/2016 **Time:** 17:25
Place Reported: Else **District:** Manchester
Location: Chester Road at junction with Egerton Street
Description: Both Vehs Trav Se Chester Rd. V2 (PCV) Moves Off From Roundabout But V1 Does Not. V2 Takes Evasive Action And Passengers Suffer Injuries As Result

Contributory Factors

Factor	Conf	Ref
DAggre	Poss	V1
DCare	Poss	V1

Vehicle Details

Type	Move	From	To	Skid
Car	Ahead	NW	SE	
PCV	Start	NW	SE	

Casualty Details

Type	Sex	Age	Sev	Pupil
1 Pas	F	41	Slight	
2 Pas	F	10	Slight	
3 Pas	F	6	Slight	
4 Pas	F	8	Slight	
5 Pas	F	52	Slight	

Locational Details

Road:	A56/A57	Junction Details:	Rdbt
OSGR:	382978 397337	Junction Control:	GW
Speed Limit:	30	Ped Crossing:	

Conditions

Road Surface:	Dry
Light Conditions:	Light
Weather Conditions:	Fine

Accident Details

Severity:	Slight
No. of Vehicles:	2
No. of Casualties:	5

Accident Reference Number: A1042701 **Day:** Monday **Date:** 09/04/2018 **Time:** 10:40
Place Reported: Scene **District:** Manchester
Location: Chorlton Road 22 metres South of Deansgate Interchange
Description: V1 Trav N Chorlton Rd In La2. Bin Lorry In Lane 1. V2 (Pedal Cycle) In Cycle Lane Crossing Chorlton Rd E-bound Crosses Lane 1 Then Collides With V1

Contributory Factors

Factor	Conf	Ref

Vehicle Details

Type	Move	From	To	Skid
Car	Ahead	S	N	
p/c	Ahead	W	E	

Casualty Details

Type	Sex	Age	Sev	Pupil
1 Drv	M	27	Slight	
2 Rid	M	36	Slight	

Locational Details

Road:	A5067	Junction Details:	
OSGR:	382982 397192	Junction Control:	n/a
Speed Limit:	30	Ped Crossing:	

Conditions

Road Surface:	Dry
Light Conditions:	Light
Weather Conditions:	N/A

Accident Details

Severity:	Slight
No. of Vehicles:	2
No. of Casualties:	2

Accident Reference Number: A1073985 **Day:** Saturday **Date:** 01/08/2020 **Time:** 18:37
Place Reported: Else **District:** Manchester
Location: Chester Road at junction with Egerton Street
Description: V1 Trav Se Egerton St, V2 Waiting For Lights Ahead To Change At Chester Rd Rdabt & It Is Hit From Behind By V1. Driver Of V1 Refuses To Exchange Details. V1 Fts

Contributory Factors

Factor	Conf	Ref

Vehicle Details

Type	Move	From	To	Skid
Car	Ahead	NW	SE	
Car	Waitg	NW	SE	

Casualty Details

Type	Sex	Age	Sev	Pupil
1 Drv	M	51	Slight	
2 Pas	F	44	Slight	
3 Pas	F	19	Slight	
4 Pas	F	14	Slight	

Locational Details

Road:	A57/A56	Junction Details:	Rdbt
OSGR:	382985 397339	Junction Control:	GW
Speed Limit:	30	Ped Crossing:	

Conditions

Road Surface:	Dry
Light Conditions:	Light
Weather Conditions:	Fine

Accident Details

Severity:	Slight
No. of Vehicles:	2
No. of Casualties:	4

Accident Reference Number: A1286517 **Day:** Sunday **Date:** 12/03/2023 **Time:** 17:25
Place Reported: Self **District:** Manchester
Location: Deansgate Interchange Roundabout at junction with Chorlton Road
Description: Both Vehs Trav W Deansgate Interchange Roundabout, V2 Staty At Ats, V1 Fails To Stop & Front Collides With Rear Of V2. V1 Fts

Contributory Factors

Factor	Conf	Ref

Vehicle Details

Type	Move	From	To	Skid
Taxi	Ahead	E	W	
Car	Waitg	E	W	

Casualty Details

Type	Sex	Age	Sev	Pupil
1 Drv	M	24	Slight	Un

Locational Details

Road:	A56/A5067	Junction Details:	Rdbt
OSGR:	382991 397219	Junction Control:	TS
Speed Limit:	30	Ped Crossing:	

Conditions

Road Surface:	Wet
Light Conditions:	Light
Weather Conditions:	Fine

Accident Details

Severity:	Slight
No. of Vehicles:	2
No. of Casualties:	1

Accident Reference Number: A1141540 **Day:** Monday **Date:** 03/01/2022 **Time:** 00:30
Place Reported: Self **District:** Manchester
Location: Chorlton Road at junction with Deansgate Interchange
Description: Both Vehs Trav W Deansgate Interchange. As V1 Exits Onto Chorlton Rd, V2 Reverses E-bd Towards V1 & Rear Collides With Front Of V1. V2 Fts

Contributory Factors

Factor	Conf	Ref

Vehicle Details

Type	Move	From	To	Skid
Car	Ahead	E	S	
Car	Revg	W	E	

Casualty Details

Type	Sex	Age	Sev	Pupil
1 Drv	M	20	Slight	Un

Locational Details

Road:	A5067/A56	Junction Details:	Rdbt
OSGR:	383006 397209	Junction Control:	GW
Speed Limit:	30	Ped Crossing:	

Conditions

Road Surface:	Dry
Light Conditions:	Dark
Weather Conditions:	Fine

Accident Details

Severity:	Slight
No. of Vehicles:	2
No. of Casualties:	1

Accident Reference Number: E1M43125 **Day:** Tuesday **Date:** 03/04/2018 **Time:** 19:00
Place Reported: Else **District:** Manchester
Location: Chester Road Roundabout at junction with Mancunian Way
Description: Both Vehs Trav Nw From Mancunian Way Onto Chester Rd Rndbt. V2 Goes Into V1

Contributory Factors

Factor	Conf	Ref

Vehicle Details

Type	Move	From	To	Skid
Car	Ahead	SE	NW	
Car	Ahead	SE	NW	

Casualty Details

Type	Sex	Age	Sev	Pupil
1 Drv	M	46	Slight	

Locational Details

Road:	A56/A57(M)	Junction Details:	Rdbt
OSGR:	383032 397223	Junction Control:	GW
Speed Limit:	30	Ped Crossing:	

Conditions

Road Surface:	Dry
Light Conditions:	Light
Weather Conditions:	Fine

Accident Details

Severity:	Slight
No. of Vehicles:	2
No. of Casualties:	1

Accident Reference Number: A1058683 **Day:** Monday **Date:** 03/06/2019 **Time:** 11:30
Place Reported: Scene **District:** Manchester
Location: Mancunian Way 250 metres SE Of Dawson Street
Description: V1 (Motorcycle) Trav Nw Mancunian Way & Collides With Central Reservation, Causeing Rider To Be Thrown Off Motorbike

Contributory Factors

Factor	Conf	Ref
DLearn	VLike	V1

Vehicle Details

Type	Move	From	To	Skid
m/s	Ahead	SE	NW	

Casualty Details

Type	Sex	Age	Sev	Pupil
1 Rid	M	26	Serious	

Locational Details

Road:	A57(M)	Junction Details:	
OSGR:	383032 397251	Junction Control:	n/a
Speed Limit:	50	Ped Crossing:	

Conditions

Road Surface:	Dry
Light Conditions:	Light
Weather Conditions:	Fine

Accident Details

Severity:	Serious
No. of Vehicles:	1
No. of Casualties:	1

Accident Reference Number: E1027780 **Day:** Thursday **Date:** 02/03/2017 **Time:** 09:33
Place Reported: Scene **District:** Manchester
Location: Mancunian Way at junction with Chorlton Road (Chester Road Roundabout)
Description: V1 Trav Nw Mancunian Way Is Waiting To Turn Into Chester Rd Roundabout. C1 (Pedestrian) Waits To Cross Road. C1 Begins To Cross Road N-bound And Collides With V1

Contributory Factors

Factor	Conf	Ref
DFLoo	VLike	V1
PXMas	VLike	C1
PFLoo	VLike	C1

Vehicle Details

Type	Move	From	To	Skid
Car	Ahead	SE	NW	

Casualty Details

Type	Sex	Age	Sev	Pupil
1 Ped	F	16	Slight	

Locational Details

Road:	A57(M)/A56	Junction Details:	Rdbt
OSGR:	383041 397221	Junction Control:	GW
Speed Limit:	30	Ped Crossing:	

Conditions

Road Surface:	Dry
Light Conditions:	Light
Weather Conditions:	Fine

Accident Details

Severity:	Slight
No. of Vehicles:	1
No. of Casualties:	1

Accident Reference Number: E1023220 **Day:** Saturday **Date:** 19/11/2016 **Time:** 18:20
Place Reported: Else **District:** Manchester
Location: Mancunian Way at junction with Chester Road
Description: Both Vehs Trav Nw Mancunian Way. V1 Is In Right Hand Lane At Side Of V2 (Motorcycle). V1 Then Collides With V2 As V1 Turns Left. V1 Fails To Stop And Rider Of V2 Is Knocked Off Bike.

Locational Details

Road:	A57(M)/A56	Junction Details:	Rdbt
OSGR:	383042 397224	Junction Control:	GW
Speed Limit:	30	Ped Crossing:	

Conditions

Road Surface:	Wet	Severity:	Slight
Light Conditions:	Dark	No. of Vehicles:	2
Weather Conditions:	Fine	No. of Casualties:	1

Contributory Factors

Factor	Conf	Ref

Vehicle Details

Type	Move	From	To	Skid
Car	TurnL	SE	SW	
m/s	Ahead	SE	NW	

Casualty Details

Type	Sex	Age	Sev	Pupil
1 Rid	M	20	Slight	

Accident Reference Number: E1028028 **Day:** Thursday **Date:** 02/03/2017 **Time:** 08:03
Place Reported: Scene **District:** Manchester
Location: Chester Road at junction with Mancunian Way
Description: V1 (Pedal Cycle) Trav Ne On Chester Rd Towards The City Centre. As He Travels Across Rounabout, V2 Trav Se Chester Rd, Coming From His Left, Collided With Him.

Locational Details

Road:	A56/A56	Junction Details:	Rdbt
OSGR:	383044 397325	Junction Control:	TS
Speed Limit:	30	Ped Crossing:	

Conditions

Road Surface:	Dry	Severity:	Slight
Light Conditions:	Light	No. of Vehicles:	2
Weather Conditions:	Fine	No. of Casualties:	1

Contributory Factors

Factor	Conf	Ref
DFLoo	VLike	V1
DJnRst	Poss	V1
DJudge	VLike	V1
DBrake	Poss	V1

Vehicle Details

Type	Move	From	To	Skid
p/c	Start	SW	NE	
Car	Ahead	NW	SE	

Casualty Details

Type	Sex	Age	Sev	Pupil
1 Rid	M	32	Slight	

Accident Reference Number: A1048327 **Day:** Sunday **Date:** 16/09/2018 **Time:** 15:30
Place Reported: Scene **District:** Manchester
Location: Mancunian Way at junction with Chester Raod
Description: All Vehs Trav Nw Mancunian Way V2 & V3 Stationary. V1 Collides Rear V2 Pushing Same Into Rear V3.

Locational Details

Road:	A57(M)/A56	Junction Details:	Mult
OSGR:	383051 397222	Junction Control:	GW
Speed Limit:	50	Ped Crossing:	Br/S

Conditions

Road Surface:	Dry	Severity:	Slight
Light Conditions:	Light	No. of Vehicles:	3
Weather Conditions:	Fine	No. of Casualties:	1

Contributory Factors

Factor	Conf	Ref
DDisIn	Poss	V1
DTgate	Poss	V1

Vehicle Details

Type	Move	From	To	Skid
Car	chlnR	SE	NW	Skid
Car	Ahead	SE	NW	
Car	Ahead	SE	NW	

Casualty Details

Type	Sex	Age	Sev	Pupil
1 Pas	M	35	Slight	

Accident Reference Number: E1046967 **Day:** Sunday **Date:** 05/08/2018 **Time:** 22:10
Place Reported: Scene **District:** Manchester
Location: Mancunian Way 15 metres SE Of Chester Road
Description: All Vehs Trav Nw Mancunian Way, V1 Overtaking Stationary V2 On Its Offside But Collides Rear Of V2 & Nearside Of V3

Locational Details

Road:	A57(M)/A56	Junction Details:	Rdbt
OSGR:	383052 397218	Junction Control:	GW
Speed Limit:	50	Ped Crossing:	

Conditions

Road Surface:	Dry	Severity:	Slight
Light Conditions:	Dark	No. of Vehicles:	3
Weather Conditions:	Fine	No. of Casualties:	3

Contributory Factors

Factor	Conf	Ref

Vehicle Details

Type	Move	From	To	Skid
Car	O/Ts	SE	NW	
Car	Waitg	SE	NW	
Car	Ahead	SE	SW	

Casualty Details

Type	Sex	Age	Sev	Pupil
1 Drv	M	43	Slight	
2 Drv	M	32	Slight	
3 Drv	F	35	Slight	

Accident Reference Number: A1044636 **Day:** Wednesday **Date:** 12/05/2021 **Time:** 10:26

Place Reported: Scene **District:** Manchester

Location: Deansgate Interchange Roundabout at junction with Chester Road

Description: V1 Trav Sw Chester Rd Enters Rdabt, V2 Trav Ne Chester Rd Turns Right Onto Rdabt & Across Path Of V1. V2 Fails To Look Properly & N/s Collides With Front Of V1

Locational Details				Conditions		Accident Details	
Road:	A56/A56	Junction Details:	Rdbt	Road Surface:	Wet	Severity:	Slight
OSGR:	383052 397319	Junction Control:	TS	Light Conditions:	Light	No. of Vehicles:	2
Speed Limit:	30	Ped Crossing:	TSX	Weather Conditions:	Fine	No. of Casualties:	2

Contributory Factors

Factor	Conf	Ref
DFLoo	VLike	V2
DJudge	VLike	V2
DSpee	Poss	V1

Vehicle Details

Type	Move	From	To	Skid
Car	Ahead	NE	SW	
Car	TurnR	SW	NE	

Casualty Details

Type	Sex	Age	Sev	Pupil
1 Drv	M	26	Slight	Un
2 Drv	M	32	Slight	Un

Accident Reference Number: A1039686 **Day:** Wednesday **Date:** 17/01/2018 **Time:** 22:56

Place Reported: Else **District:** Manchester

Location: Chester Road/A57(M) Roundabout at junction with Chester Road

Description: V1 Trav Se On Rbt Contravenes Red Ats & Collides With O/side Of V2 Trav Sw On Chester Rd.

Locational Details				Conditions		Accident Details	
Road:	A56/A56	Junction Details:	Rdbt	Road Surface:	Wet	Severity:	Slight
OSGR:	383055 397318	Junction Control:	TS	Light Conditions:	Dark	No. of Vehicles:	2
Speed Limit:	30	Ped Crossing:	TSX	Weather Conditions:	R&W	No. of Casualties:	1

Contributory Factors

Factor	Conf	Ref
Slip	VLike	V1
DATS	VLike	V1
DJnOvr	VLike	V1
DCare	VLike	V1

Vehicle Details

Type	Move	From	To	Skid
Car	Ahead	NW	SE	
Car	Ahead	NE	SW	

Casualty Details

Type	Sex	Age	Sev	Pupil
1 Drv	M	24	Slight	

Accident Reference Number: A1M61509 **Day:** Monday **Date:** 09/09/2019 **Time:** 17:20

Place Reported: Else **District:** Manchester

Location: Chester Road at junction with Chester Road Roundabout

Description: Both Vehs Trav Sw Chester Rd, V1 Going Ahead, V2 Changes Lane To Left Without Indicating & N/s Of V2 Hits V1 O/s

Locational Details				Conditions		Accident Details	
Road:	A56/A56	Junction Details:	Rdbt	Road Surface:	Dry	Severity:	Slight
OSGR:	383059 397320	Junction Control:	TS	Light Conditions:	Light	No. of Vehicles:	2
Speed Limit:	30	Ped Crossing:	TSX	Weather Conditions:	Fine	No. of Casualties:	1

Contributory Factors

Factor	Conf	Ref

Vehicle Details

Type	Move	From	To	Skid
Car	Ahead	NE	SW	
Car	chlnL	NE	SW	

Casualty Details

Type	Sex	Age	Sev	Pupil
1 Drv	M	36	Slight	

Accident Reference Number: E1046083 **Day:** Sunday **Date:** 24/06/2018 **Time:** 05:20

Place Reported: Else **District:** Manchester

Location: Chester Road at junction with Mancunian Way

Description: Both Vehs Trav Sw Chester Rd Turning Left To Join Mancunian Way. Collision Occurs

Locational Details				Conditions		Accident Details	
Road:	A56/A57(M)	Junction Details:	Rdbt	Road Surface:	Dry	Severity:	Slight
OSGR:	383066 397269	Junction Control:	GW	Light Conditions:	Light	No. of Vehicles:	2
Speed Limit:	30	Ped Crossing:		Weather Conditions:	Fine	No. of Casualties:	1

Contributory Factors

Factor	Conf	Ref

Vehicle Details

Type	Move	From	To	Skid
Car	wtgTL	NE	SE	
Car	wtgTL	NE	SE	

Casualty Details

Type	Sex	Age	Sev	Pupil
1 Drv	M	38	Slight	

Accident Reference Number: A1030873 **Day:** Friday **Date:** 12/03/2021 **Time:** 21:30
Place Reported: Else **District:** Manchester
Location: Chester Road Roundabout at junction with Mancunian Way W-bd On-slip Road
Description: Both Vehs Trav Sw Chester Rd Enter Rdabt, As V2 (Pedal Cycle) Exits Rdabt Onto W-bd Mancunian Way On-slip, V1 In Middle Lane Also Exits The Same & Collides Front Of V2

Contributory Factors

Factor	Conf	Ref

Vehicle Details

Type	Move	From	To	Skid
Car	Ahead	NE	SE	
p/c	Ahead	NE	SE	

Casualty Details

Type	Sex	Age	Sev	Pupil
1 Rid	M	30	Slight	Un

Locational Details

Road:	A56/A57(M)	Junction Details:	Rdbt
OSGR:	383066 397269	Junction Control:	GW
Speed Limit:	30	Ped Crossing:	

Conditions

Road Surface:	Wet
Light Conditions:	Dark
Weather Conditions:	R&W

Accident Details

Severity:	Slight
No. of Vehicles:	2
No. of Casualties:	1

Accident Reference Number: A1261368 **Day:** Saturday **Date:** 31/12/2022 **Time:** 19:10
Place Reported: Self **District:** Manchester
Location: Chester Road 10 metres NE Of Deansgate Interchange Roundabout
Description: Both Vehs Trav Sw Chester Rd Appr Ats, N/s Of V1 Collides With Front Of V2

Contributory Factors

Factor	Conf	Ref

Vehicle Details

Type	Move	From	To	Skid
Car	Ahead	NE	SW	
Car	Ahead	NE	SW	

Casualty Details

Type	Sex	Age	Sev	Pupil
1 Drv	M	48	Slight	Un

Locational Details

Road:	A56/A56	Junction Details:	Rdbt
OSGR:	383067 397326	Junction Control:	TS
Speed Limit:	30	Ped Crossing:	TSX

Conditions

Road Surface:	Dry
Light Conditions:	Dark
Weather Conditions:	Fine

Accident Details

Severity:	Slight
No. of Vehicles:	2
No. of Casualties:	1

Accident Reference Number: A1M61480 **Day:** Wednesday **Date:** 04/09/2019 **Time:** 09:20
Place Reported: Else **District:** Manchester
Location: Chester Road 20 metres NE Of Mancunian Way Roundabout
Description: Both Vehs Trav Sw Chester Rd, V1 (Motorcycle) Stationary At Lights But V2 (LGV) Infront Reverses Into V1. V2 Fts

Contributory Factors

Factor	Conf	Ref

Vehicle Details

Type	Move	From	To	Skid
m/s	Waitg	NE	SW	
LGV	Revg	SW	NE	

Casualty Details

Type	Sex	Age	Sev	Pupil
1 Rid	M	36	Slight	

Locational Details

Road:	A56/A56	Junction Details:	Slip
OSGR:	383075 397328	Junction Control:	TS
Speed Limit:	30	Ped Crossing:	TSX

Conditions

Road Surface:	Dry
Light Conditions:	Light
Weather Conditions:	Fine

Accident Details

Severity:	Slight
No. of Vehicles:	2
No. of Casualties:	1

Accident Reference Number: A1062162 **Day:** Saturday **Date:** 14/09/2019 **Time:** 18:20
Place Reported: Else **District:** Manchester
Location: Chester Road (From Bridgewater Viaduct) at junction with Chester Road Roundabout
Description: Both Vehs Trav Sw Chester Road On Filter Lane Section, V2 Stationary In Standing Traffic, V1 Hits Rear Of V2. V1 Fts

Contributory Factors

Factor	Conf	Ref

Vehicle Details

Type	Move	From	To	Skid
Car	chlnR	NE	SW	
Car	Waitg	NE	SW	

Casualty Details

Type	Sex	Age	Sev	Pupil
1 Drv	F	46	Slight	

Locational Details

Road:	A56/A56	Junction Details:	Rdbt
OSGR:	383076 397318	Junction Control:	TS
Speed Limit:	30	Ped Crossing:	TSX

Conditions

Road Surface:	Dry
Light Conditions:	Light
Weather Conditions:	Fine

Accident Details

Severity:	Slight
No. of Vehicles:	2
No. of Casualties:	1

Accident Reference Number: A1231500 **Day:** Sunday **Date:** 02/10/2022 **Time:** 08:35
Place Reported: Self **District:** Manchester
Location: Chester Road 90 metres NE Of Deansgate Interchange Roundabout
Description: Both Vehs Trav Sw Chester Rd. Front Of V1 Collides With O/s Of V2. V1 Fts

Locational Details				Conditions		Accident Details	
Road:	A56		Junction Details:	Road Surface:	Dry	Severity:	Slight
OSGR:	383136	397356	Junction Control: n/a	Light Conditions:	Light	No. of Vehicles:	2
Speed Limit:	30		Ped Crossing:	Weather Conditions:	Fine	No. of Casualties:	1

Contributory Factors

Factor	Conf	Ref

Vehicle Details

Type	Move	From	To	Skid
Car	Ahead	NE	SW	
Car	Ahead	NE	SW	

Casualty Details

Type	Sex	Age	Sev	Pupil
1 Drv	F	21	Slight	Un

Accident Reference Number: A1268784 **Day:** Thursday **Date:** 12/01/2023 **Time:** 17:30
Place Reported: Self **District:** Manchester
Location: Chester Road 60 metres SW Of Great Jackson Street
Description: Both Vehs Trav Sw Chester Rd Slow For Traffic, Front Of V1 Collides With Front Of V2

Locational Details				Conditions		Accident Details	
Road:	A56		Junction Details:	Road Surface:	Dry	Severity:	Slight
OSGR:	383144	397358	Junction Control: n/a	Light Conditions:	Dark	No. of Vehicles:	2
Speed Limit:	30		Ped Crossing:	Weather Conditions:	Fine	No. of Casualties:	1

Contributory Factors

Factor	Conf	Ref

Vehicle Details

Type	Move	From	To	Skid
Car	Stopg	NE	SW	
Car	Stopg	NE	SW	

Casualty Details

Type	Sex	Age	Sev	Pupil
1 Drv	M	30	Slight	Un

Accident Reference Number: A1204724 **Day:** Thursday **Date:** 14/07/2022 **Time:** 08:40
Place Reported: Self **District:** Manchester
Location: Chester Road at junction with Great Jackson Street
Description: V2 (Pedal Cycle) Trav Sw Chester Rd. V1 Trav Nw Great Jackson St, Fails To Give Way At Jct, Front Of V1 Collides With N/s Of V2

Locational Details				Conditions		Accident Details	
Road:	A56/U		Junction Details: Tjun	Road Surface:	Dry	Severity:	Slight
OSGR:	383196	397378	Junction Control: GW	Light Conditions:	Light	No. of Vehicles:	2
Speed Limit:	30		Ped Crossing:	Weather Conditions:	Fine	No. of Casualties:	1

Contributory Factors

Factor	Conf	Ref

Vehicle Details

Type	Move	From	To	Skid
Car	Ahead	SE	NW	
p/c	Ahead	NE	SW	

Casualty Details

Type	Sex	Age	Sev	Pupil
1 Rid	F	30	Slight	Un

Accident Reference Number: A1047849 **Day:** Friday **Date:** 24/08/2018 **Time:** 17:29
Place Reported: Else **District:** Manchester
Location: Chester Road at junction with Great Jackson Street
Description: V1 Trav Nw Great Jackson St Turns Left & Collides With V2 (Pedal Cycle) Trav Ne Chester Rd In Cycleway.

Locational Details				Conditions		Accident Details	
Road:	A56/U		Junction Details: Tjun	Road Surface:	Dry	Severity:	Serious
OSGR:	383197	397377	Junction Control: GW	Light Conditions:	Light	No. of Vehicles:	2
Speed Limit:	30		Ped Crossing:	Weather Conditions:	Fine	No. of Casualties:	1

Contributory Factors

Factor	Conf	Ref

Vehicle Details

Type	Move	From	To	Skid
Car	wtgTL	SE	SW	
p/c	Ahead	SW	NE	

Casualty Details

Type	Sex	Age	Sev	Pupil
1 Rid	F	50	Serious	

Accident Reference Number: A1087495 **Day:** Tuesday **Date:** 14/09/2021 **Time:** 09:40

Place Reported: Else **District:** Manchester

Location: Great Jackson Street 5 metres SE Of Chester Road

Description: V1 (Electric Scooter) Trav Ne Chester Rd In Cycle Lane Across Great Jackson St. V2 (Taxi) Trav Nw Great Jackson St & Front Collides With Front Of V1

Contributory Factors

Factor	Conf	Ref
DCPav	VLike	V1

Vehicle Details

Type	Move	From	To	Skid
othr	Ahead	SW	NE	
Taxi	Start	SE	NW	

Casualty Details

Type	Sex	Age	Sev	Pupil
1 Drv	M	18	Serious	Un

Locational Details

Road:	U/A56	Junction Details:	Tjun
OSGR:	383200 397378	Junction Control:	GW
Speed Limit:	30	Ped Crossing:	

Conditions

Road Surface:	Dry
Light Conditions:	Light
Weather Conditions:	Fine

Accident Details

Severity:	Serious
No. of Vehicles:	2
No. of Casualties:	1

Accident Reference Number: A1150286 **Day:** Friday **Date:** 04/03/2022 **Time:** 10:45

Place Reported: Scene **District:** Manchester

Location: Great Jackson Street at junction with Chester Road

Description: V1 (Taxi) Trav Nw Great Jackson St Twds Chester Rd. V2 (Pedal Cycle) Trav E Chester Rd In Cycle Lane. Drivers Of Both Vehs Fail To See & Front Of V1 Hits N/s Of V2

Contributory Factors

Factor	Conf	Ref
DFLoo	VLike	V1
DFLoo	VLike	V2

Vehicle Details

Type	Move	From	To	Skid
Taxi	Waitg	SE	NW	
p/c	Ahead	W	E	

Casualty Details

Type	Sex	Age	Sev	Pupil
1 Rid	M	29	Slight	Un

Locational Details

Road:	U/A56	Junction Details:	Slip
OSGR:	383200 397379	Junction Control:	GW
Speed Limit:	30	Ped Crossing:	

Conditions

Road Surface:	Dry
Light Conditions:	Light
Weather Conditions:	Fine

Accident Details

Severity:	Slight
No. of Vehicles:	2
No. of Casualties:	1

Abbreviations used in GMAXI Reports for New Contributory Factors - 2005/06

WARNING: Please note that -
Codes 101 to 999 only relate to accidents from 1 April 2005. - New National Factors introduced by DfT
Codes 1001 to 1154 relate to accidents from 1 April 1999 to 31 March 2005 only. - Local Factors introduced
Accidents before 1 April 1999 do not have contributory factors attached.

Code	ContribFactor1Name	ContribFactor1Abb
0	None	
101	Poor or defective road surface	Surf
102	Deposit on road (eg oil, mud, chippings)	Dposit
103	Slippery road (due to weather)	Slip
104	Inadequate/masked signs or road markings	Mark
105	Defective traffic signals	DefATS
106	Traffic calming (eg speed cushions, road humps, chicanes)	TCalm
107	Temporary road layout (eg contraflow)	TmpRd
108	Road layout (eg bend, hill, narrow carriageway)	RdLay
109	Animal or object in carriageway	ObjInC
201	Tyres illegal, defective or under inflated	VTyres
202	Defective lights or indicators	VLight
203	Defective brakes	VBrake
204	Defective steering or suspension	VSteer
205	Defective or missing mirrors	VMirr
206	Overloaded or poorly loaded vehicle or trailer	VLoad
301	Disobeyed automatic traffic signal	DATS
302	Disobeyed Give Way or Stop sign or markings	DGWorS
303	Disobeyed double white line	DWhite
304	Disobeyed pedestrian crossing facility	DPedX
305	Illegal turn or direction of travel	DITurn
306	Exceeding speed limit	DSpeed
307	Travelling too fast for conditions	DFast
308	Following too close	DTgate
309	Vehicle travelling along pavement	DPave
310	Cyclist entering road from pavement	DCPave
401	Junction overshoot	DJnOvr
402	Junction restart	DJnRst
403	Poor turn or manoeuvre	DTurn
404	Failed to signal/misleading signal	DSign
405	Failed to look properly	DFLook
406	Failed to judge other person's path or speed	DJudge
407	Passing too close to cyclist, horse rider or pedestrian	DClose
408	Sudden braking	DBrake
409	Swerved	DSwerv
410	Loss of control	DLossC
501	Impaired by alcohol	DAlcoh
502	Impaired by drugs (illicit or medicinal)	DDrugs
503	Fatigue	DTired
504	Uncorrected, defective eyesight	DEye
505	Illness or disability, mental or physical	DIllns
506	Not displaying lights at night or in poor visibility	DNoLit
507	Cyclist wearing dark clothing at night	DCDark
508	Driver using mobile phone	DMobPh
509	Distraction in vehicle	DDisIn
510	Distraction outside vehicle	DDisOu
601	Aggressive driving	DAggre
602	Careless/reckless/in a hurry	DCare

603	Nervous/uncertain/panic	DPanic
604	Driving too slow or conditions or slow vehicle (eg tractor)	DSlow
605	Learner or inexperienced driver/rider	DLearn
606	Inexperience of driving on the left	DInDrL
607	Inexperience with type of vehicle	DInVeh
701	Stationary or parked vehicle(s)	DStat
702	Vegetation	DVeg
703	Road layout (eg bend, winding road, hill crest)	DRdLay
704	Buildings, road signs, street furniture	DBuild
705	Dazzling headlights	DHLigt
706	Dazzling sun	DSun
707	Rain, sleet, snow, or fog	DRain
708	Spray from other vehicles	DFog
709	Visor or windscreen dirty or scratched	DSpray
710	Vehicle blind spot	DWscrn
801	Crossed road masked by stationary or parked vehicle	PXMask
802	Failed to look properly	PFLook
803	Failed to judge vehicle's path or speed	PJudge
804	Wrong use of pedestrian crossing facility	PPedX
805	Dangerous action in carriageway (eg playing)	PDange
806	Impaired by alcohol	PAlcoh
807	Impaired by drugs (illicit or medicinal)	PDrugs
808	Careless/reckless/in a hurry	PCare
809	Pedestrian wearing dark clothing at night	PCloth
810	Disability or illness, mental or physical	PIllns
901	Stolen vehicle	StoVeh
902	Vehicle in course of crime	VCrime
903	Emergency vehicle on call	EmVeh
904	Vehicle door opened or closed negligently	VDoor
999	Other	Other
1001	Failed to stop (mandatory sign)	Fstop
1002	Failed to give way	Fgive
1003	Failed to avoid pedestrian (pedestrian not to blame)	FAPed
1004	Failed to avoid vehicle or object in carriageway	FAObj
1005	Failure to signal/misleading signal	Fsig
1006	Loss of control of vehicle	Loss
1007	Pedestrian entered carriageway without due care	Ped
1008	Passenger fell in or near PSV	Pfell
1009	Swerved to avoid object in carriageway	Swerv
1010	Sudden braking	Brake
1011	Poor turn/manoeuvre	Turn
1012	Poor overtaking	Over
1013	Drove wrong way (e.g. 1-way street)	1Way
1014	Opening door carelessly	Door
1015	Other	Other
1101	Impairment alcohol	Alcoh
1102	Impairment drugs	Drugs
1103	Impairment fatigue	Tired
1104	Impairment illness	Ill
1105	Distraction stress/emotional state of mind	Stress
1106	Distraction physical in/on vehicle	DPhIn
1107	Distraction physical outside vehicle	DPhOut
1108	Behaviour panic	Panic
1109	Behaviour careless/thoughtless/reckless	Care
1110	Behaviour nervous/uncertain	Nerve
1111	Behaviour in a hurry	Hurry

1112	Failure to judge other person's path or speed	Fjudg
1113	Disability	Disab
1114	Failed to look	F2look
1115	Looked but did not see	Nsee
1116	Inattention	Inatt
1117	Person hit wore dark or inconspicuous clothing	Cloth
1118	Other (Personal details)	Pother
1119	Crossed from behind parked vehicle etc	Cross
1120	Ignored lights at crossing	Xlight
1121	Excessive Speed	Speed
1122	Following too close	Tgate
1123	Inexperience of driving	InDri
1124	Inexperience of vehicle	InVeh
1125	Interaction or competition with other road users	Users
1126	Aggressive driving	Aggr
1127	Lack of judgement of own path	Judge
1128	Tyres wrong pressure	Press
1129	Tyres deflation before impact	Deflat
1130	Tyres worn/insufficient tread	Tread
1131	Defective lights or signals	Signal
1132	Defective brakes	Brakes
1133	Other (Vehicle defects)	Vother
1134	Site details poor road surface	Surf
1135	Site details poor/no street lighting	Lightg
1136	Site details inadequate signing	Sign
1137	Site details steep hill	Hill
1138	Site details narrow road	Narr
1139	Site details bend/winding road	Rbend
1140	Site details roadworks	Works
1141	Slippery road	Slip
1142	High winds	Winds
1143	Earlier accident	Earli
1144	Other (Local conditions)	Lother
1145	View windows obscured	Obs
1146	View glare from sun	Glare
1147	View glare from headlights	Head
1148	Surroundings bend/winding road	Bend
1149	Surroundings stationary parked vehicle	Stat
1150	Surroundings moving vehicle	Move
1151	Surroundings buildings, fences, vegetation etc	Fence
1152	Weather (e.g. mist or sleet)	Weath
1153	Failed to see pedestrian or vehicle in blindspot	Blind
1154	Animal out of control	Animal
9999	GMP Out of Range	OoR

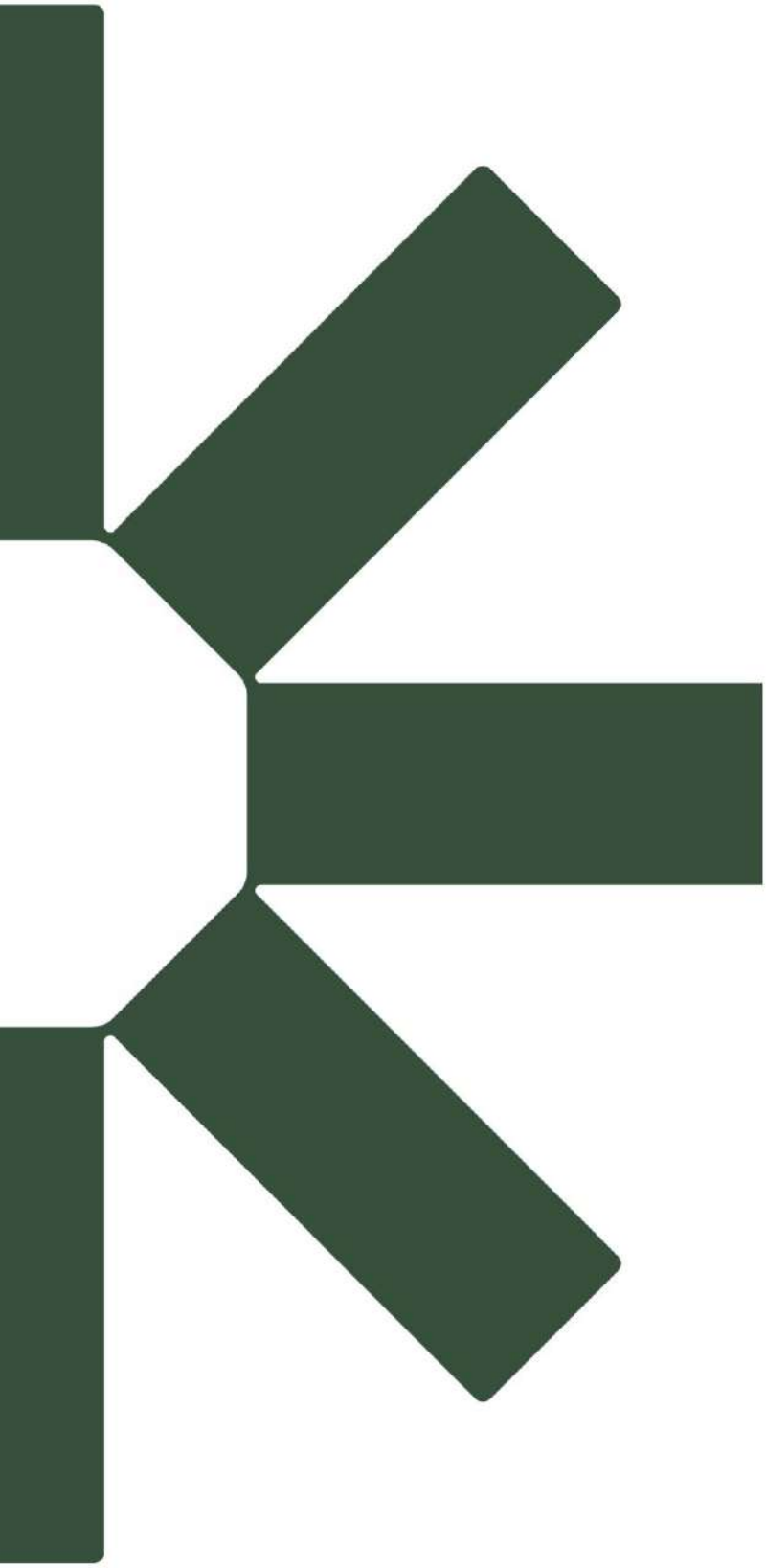

Making Sustainability Happen