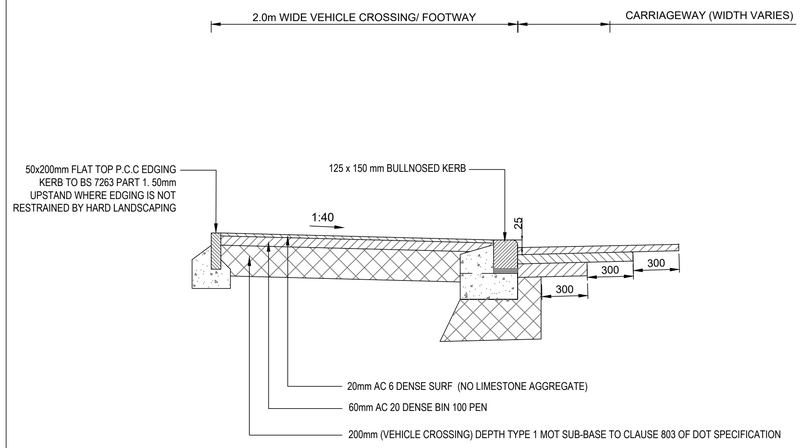

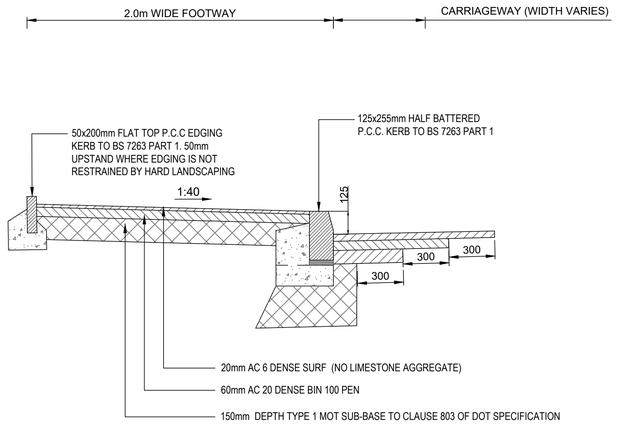

SUBGRADE CBR (%)	CAPPING LAYER mm	SUB-BASE mm	OVERALL THICKNESS mm	SUB -BASE AS CAPPING mm
2	600	150	750	N/A
2.5	400	150	550	350
3	370	150	520	310
4	310	150	460	270
5	250	150	400	230
8	220	150	370	200
10	190	150	340	180
15	150	150	300	150

NOTES: THE TABLE IS BASED ON FIGURE 3.1 OF THE DESIGN MANUAL FOR ROADS AND BRIDGES - VOLUME 7 SECTION 2 -PART 2 AND IS FOR GUIDANCE PURPOSES ONLY. CBR TESTS WILL BE REQUIRED ON TOP OF THE SUB BASE LAYER AND A MINIMUM VALUE OF 30% MUST BE ACHIEVED AT EACH TEST LOCATION. KERB FACE NORMALLY 125MM GULLY GRATE AND FRAME TO BE SET 5-6MM BELOW ADJACENT CARRIAGEWAY OVERBREAK IN EXCAVATION FOR GULLY TO BE BACKFILLED WITH CONCRETE GARDE ST4 ALL CONCRETE BED AND BACKING TO COMPLY WITH BS:8500 AND BE EN 206-1 KERBS TO BE HYDRAULICALLY PRESSED TO BS 340 STREET LIGHTING SHALL BE PROVIDED IN ACCORDANCE WITH MANCHESTER CITY COUNCIL'S REQUIREMENTS. FORMWORK TO BE USED FOR ALL VERTICAL FACES OF CONCRETE.

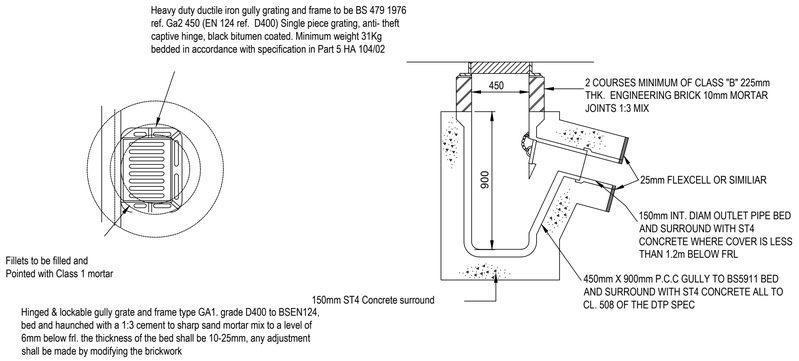

GULLY DETAILS

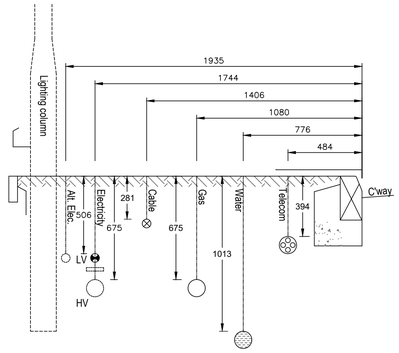

SERVICE STRIP ARRANGMENTS

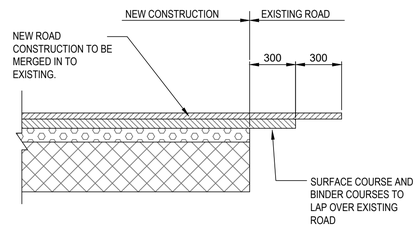

CARRIAGEWAY MERGING DETAIL

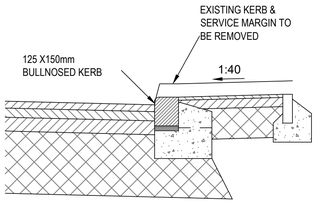

NEW KERB DETAIL FOR EXISTING SERVICE MARGIN

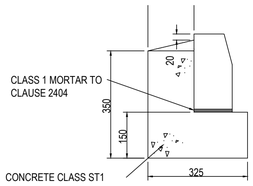

125X255mm HALF BATTERED KERB

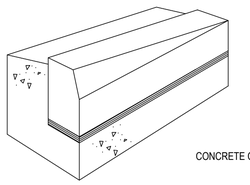

125X255/150mm HALF BATTERED DROP KERB

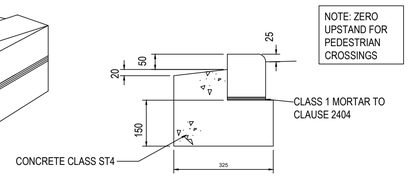

125X150mm BULLNOSED DROPPED KERB AT VEHICLE CROSSINGS

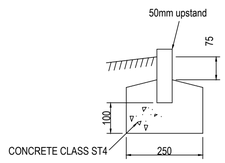

50X150mm FLAT TOP EDGING

KERB DETAILS

REV	DATE	DESCRIPTION	BY	CHK	APP
P01	11.12.2023	PRELIMINARY ISSUE	JPR	JCM	JCM

DRAWING STATUS: **PRELIMINARY**

CLIENT: CASEY

ARCHITECT: JOHN MCCALL ARCHITECTS

PROJECT: QUEENS AVENUE P500 MANCHESTER

TITLE: S278 HIGHWAY DETAILS

STATUS:	PROJECT No.	PROJECT	ORIGINATOR	VOL/SYS	LEVEL	TYPE	ROLE	DRAWING No.	REV:
S2	223-151	QAV -	AJP -	ZZ -	00 -	DR -		C - 1630	P01

SCALE @ A1:	DESIGNED:	DRAWN:	CHECKED:	APPROVED:	DATE:
1:20	JPR	JPR	JCM	JLS	NOV 2023

AJP consulting engineers
0151 227 1462 info@ajpltd.co.uk 1 Dale Street, Liverpool, L2 2ET