purifiedair®

Specification & EMAQ Report

Project Name SKOF

Corporation Street, Manchester

Prepared for: Ed Fellerman (the fellerman partnership)

Prepared by: Andrew James

Date: 31/8/23

Contact details:

Andrew James
01708 755 414
andrew.james@purifiedair.com

AIR FILTRATION EXPERTS

UK MANUFACTURER

MARKET LEADERS SINCE 1984

CONTENTS

CONTENTS 2

INTRODUCTION 3

TECHNICAL SPECIFICATIONS (per unit) 7

TECHNICAL DRAWINGS 8

INTRODUCTION

Interpretation of Requirements

Following our conversation today I am pleased to provide an equipment selection for an odour control solution.

As with any project we get involved in we always recommend to our clients that they should closely follow the EMAQ guide for guidance on odour control equipment selection.
This ensures that what they propose will be in line with local authority's requirements and if the system is maintained correctly they will not exhaust nuisance odours leading to complaints from nearby residents.

With this in mind I carried out a risk assessment as detailed in Appendix 3 of the EMAQ Guide.
Taking into consideration the level of discharge, proximity of receptors, size of kitchen and cooking type your project requires a very high level of odour control to comply.

We have scored as below and as taken from Appendix 3: Risk Assessment for Odour;

Risk	Score
Dispersions	**20**
Proximity Of Receptors	**10**
Size Of Kitchen	**3**
Cooking Type	**7**
Total Score	**40**

The type of odour abatement system that complies is as below, taken directly from the EMAQ Guide and must be to a high level of control;

Odour arrestment plant performance

Very high level of odour control may include:

1. Fine filtration or ESP followed by Carbon filtration (carbon filters rated with a 0.4 – 0.8 second residence time).
2. Fine filtration or ESP followed by carbon filtration and counteractant/neutralising system to achieve the same level of control as point 1.
3. Fine filtration or ESP followed by UV ozone system to achieve the same level of control as point 1.

Criteria	Score		Score	Details
Dispersion	Very Poor		20	Low level discharge, discharge into courtyard or restriction on stack.
	Poor		15	Not low level but below eaves, or discharge below 10 m/s
	Moderate		10	Discharging 1m above eaves at 10-15 m/s
	Good		5	Discharging 1m above ridge at 15 m/s
Proximity of Receptor	Close		10	Closest sensitive receptor between 20m from kitchen discharge.
	Medium		5	Closest sensitive receptor between 20 and 100m from kitchen discharge.
	Far		1	Closest sensitive receptor more than 100m from kitchen discharge.
Size of Kitchen	Large		5	More than 100 covers or large sized take away.
	Medium		3	Between 30 and 100 covers or medium sized take away.
	Small		1	Less than 30 covers or small take away.
Cooking type (odour and grease loading)	Very High		10	Pub (high level of fried food), fried chicken, burgers or fish & chips. *Turkish, Middle Eastern or any other premises cooking with solid fuel*
	High		7	Vietnamese, Thai, Indian, *Japanese, Chinese, steakhouse.*
	Medium		4	Cantonese, *Italian, French, Pizza (gas fired)*
	Low		1	Most pubs *(no fried food, mainly reheating and sandwiches etc.), Tea rooms.*

PRODUCT OVERVIEWS

The System

UVO

Key Features
Easy to install
Can be retro-fitted into existing duct
Virtually no pressure loss
No monthly maintenance needed

Our UVO1000 units should be fitted; this uses UV technology by producing Ozone to neutralise the cooking odours.

This will designed and installed with a 2 second dwell time ensuring the system designed meets EMAQ guidelines.

Unlike other UV-C systems, our UV-O units are located outside of the kitchen extract duct and are connected via a spigot and small diameter ducting.

The UV-O range uses UV-C technology to produce ozone and hydroxyl free radicals to oxidise cooking odours through a process of ozonolysis.

Although it is widely accepted that the best way to apply UV-C is directly in-line with the air stream itself, this can incur the problem of the lamps getting dirty and thus greatly reducing their effectiveness.

With our UV-O units the air flow does not come from the exhaust duct but from the ambient air around the unit, which is filtered on entry. This means that it is able to provide a uniform supply of ozone and hydroxyl free radicals into the extract system with an extremely low pressure loss.
As with our UV-C range, for optimum performance we would recommend 2 seconds of dwell time to allow the ozone to work effectively upon the malodorous gasses within the duct.

PRODUCT OVERVIEWS

Key Features
Eliminates up to 98% of oil, grease and smoke particles
Filters particles down to sub-micron levels
Produces Ozone to help reduce malodours
Designed with an integral sump

As our ESP's have been specifically designed for kitchen extract and not modified from industrial use, they have integral sumps to collect the oil, grease and smoke particles filtered out of the exhaust; this not only simplifies servicing but eradicates potentially dangerous spillage from the bottom of the units and greatly cuts down on flammable build-ups within the duct run.
The ionisation voltage has been designed to run at a negative potential which enhances the ionisation of particles and also produces more Ozone which is helpful in reducing odours in kitchen applications.

Our ESP units fit in-line with the kitchen ducting and can be configured modularly to cope with all extract volume requirements.

The Electrostatic Precipitator is a very efficient means for separating the particulate phase; operating efficiency when clean can be as high as 98% at particle sizes down to 0.01 micron.

The Electrostatic Precipitator does not present a high-pressure loss (175PA approx. dependant on air flow). This gives a specific advantage in that most standard Kitchen extractor fans will have the capability of overcoming this small differential.
This is particularly advantageous when it is considered that if the pressure loss were high larger noisier fans would probably be necessary resulting in potential noise pollution.s you can see the system that has been specified is in line with EMAQ guidance.

TECHNICAL SPECIFICATIONS (per unit)

2No. ESP 4500E Units.	
Air Volume Max	2.1m3/s
Electrical Supply	220/240V 50Hz 1ph
Power Consumption	50 W
Weight each	118kg
Min/Max Working Temperature	4/56°C
Max Relative Humidity	75%

2No. UV-0 1000 Units.	
Air Volume Max	2.3m3/s
Electrical Supply	220/240V 50Hz 1ph
Power Consumption	700 W
Weight each	50kg
Min/Max Working Temperature	4/56°C
Max Relative Humidity	75%

TECHNICAL DRAWINGS

ESP 4500

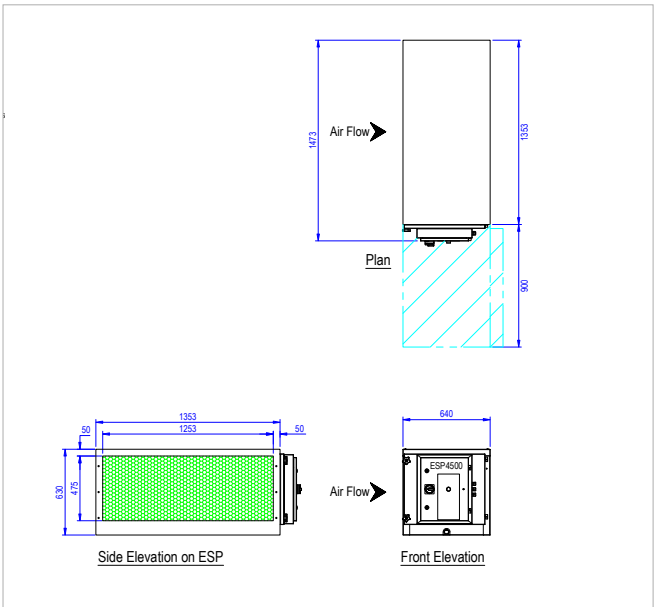

UV-0 1000

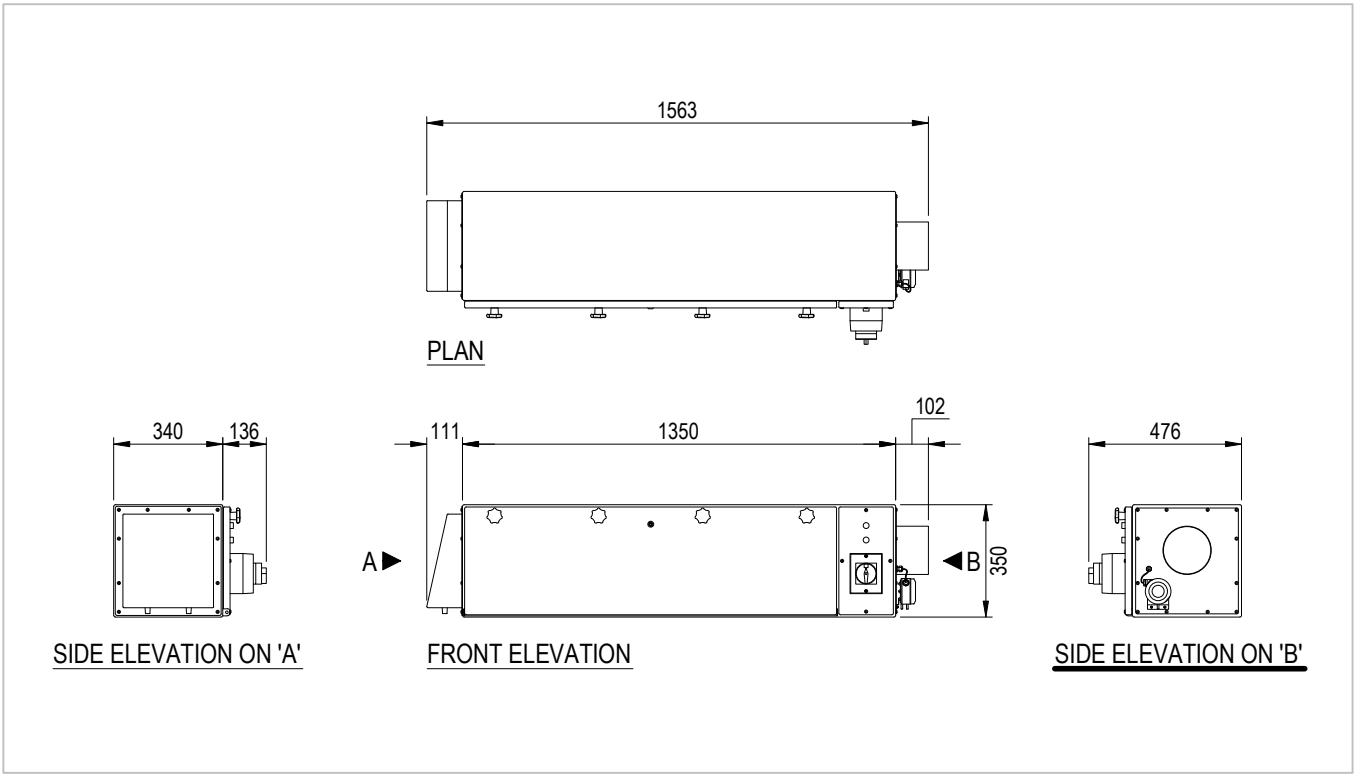

ACCREDITED AND CERTIFIED BY

Thank you for the opportunity to provide the specification and EMAQ report. Should you have any questions or queries please get in touch.

Andrew James
Sales Director
M 07766 446 264 | **T** 01708 755 414
andrew.james@purifiedair.com

purifiedair.com

Lyon House, Lyon Rd, Romford, Essex RM1 2BG