NEWSUBSTANCE

PROJECT: 2328 CWT – Citylink Walking Route

INSTALLATION REFERNCE CWT_002B_ANTENNA

CLIENT: Oak View Group

DOCUMENT: Design Summary Planning

DATE:14/03/24

Information compiled by

NEWSUBSTANCE LTD.

Greensand Foundry,

99 Water Lane,

Leeds

LS11 5QN, UK

Summary of Scheme

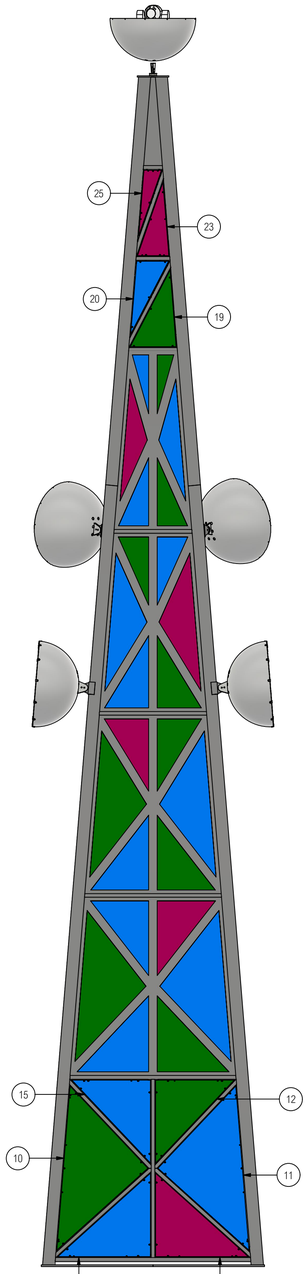

BACK
ACCESS COVER PLATES HIDDEN TO SHOW PERSPEX

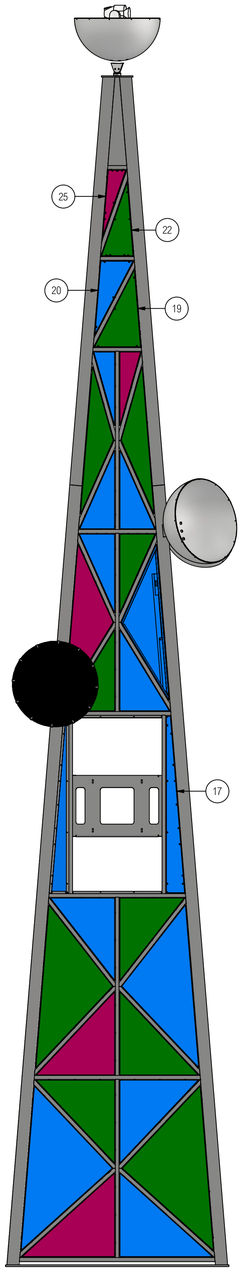

LEFT
ACCESS COVER PLATES HIDDEN TO SHOW PERSPEX

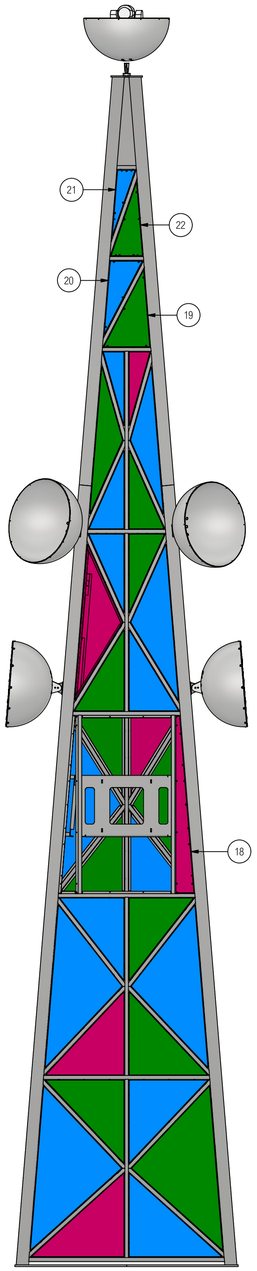

FRONT
ACCESS COVER PLATES HIDDEN TO SHOW PERSPEX

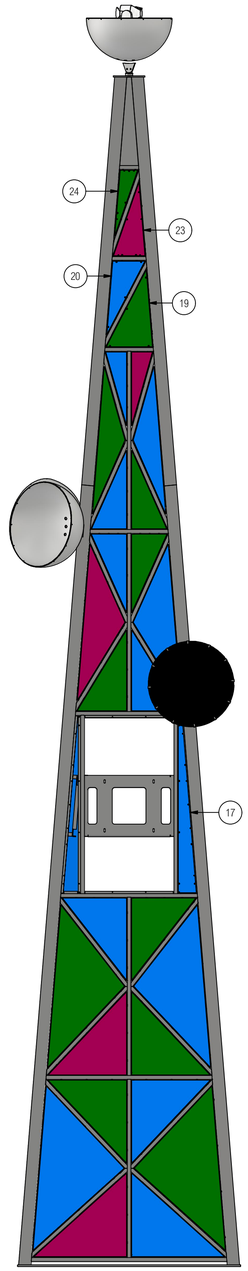

RIGHT
ACCESS COVER PLATES HIDDEN TO SHOW PERSPEX

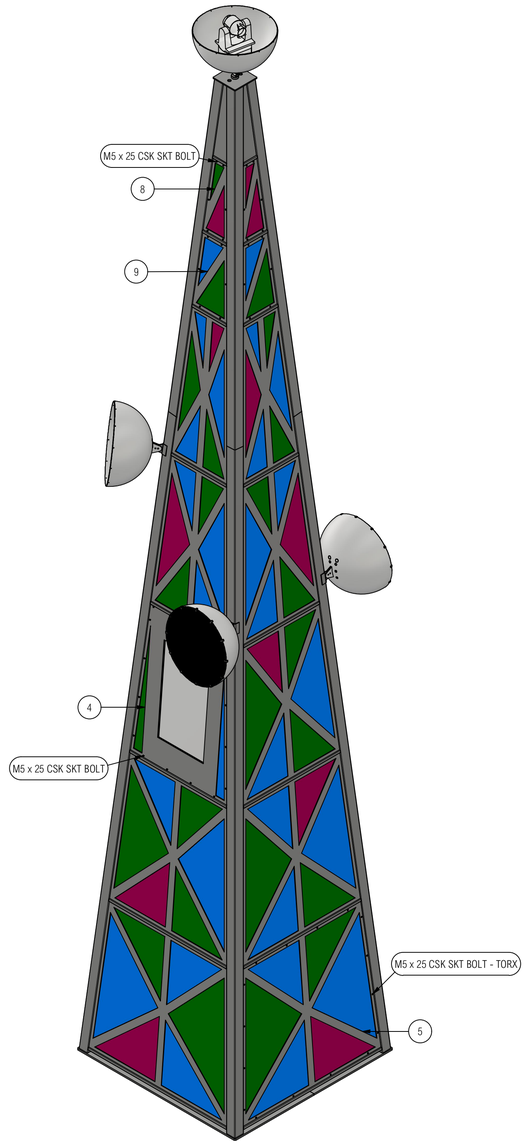

ISOMETRIC

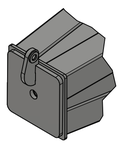

DETAIL M
SCALE 1 : 10

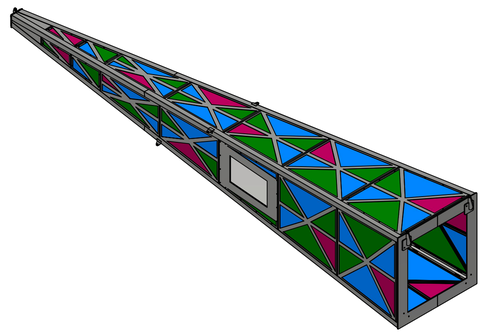

ISOMETRIC

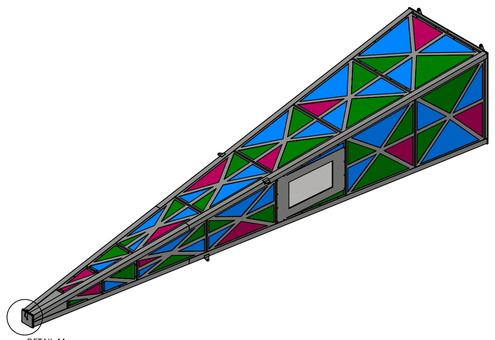

DETAIL M

ISOMETRIC

ITEM LIST

BUILD No.	PART NUMBER	DESCRIPTION	QTY
4	ANT0424-AA01-0363	TV ACCESS HATCH	3
5	ANT0424-AA01-0415	BOTTOM ACCESS HATCH	1
6 - 7	ANT0424-AA01-0003	ANTENNA	1
8	ANT0424-AA01-0378	WINDOW 7 ACCESS PLATE	4
9	ANT0424-AA01-0377	WINDOW 6 ACCESS PLATE	4
10	ANT0424-AA01-0140	W1 - P2 - GREEN - ACCESS	1
11	ANT0424-AA01-0469	W1 - P2 - BLUE- ACCESS	1
12	ANT0424-AA01-0468	W1 - P3 - GREEN - ACCESS	1
13	ANT0424-AA01-0467	W1 - P1 - PINK- ACCESS	1
14	ANT0424-AA01-0465	W1 - P1 - BLUE - ACCESS	1
15	ANT0424-AA01-0464	W1 - P3 - BLUE - ACCESS	1
16	ANT0424-AA01-0463	W3 - P4 - GREEN - ACCESS	3
17	ANT0424-AA01-0418	W3 - P5 - BLUE - ACCESS	2
18	ANT0424-AA01-0417	W3 - P5 - PINK - ACCESS	1
19	ANT0424-AA01-0379	W6 - P1 - GREEN - ACCESS	4
20	ANT0424-AA01-0380	W6 - P2 - BLUE - ACCESS	4
21	ANT0424-AA01-0382	W7 - P1 - BLUE - ACCESS	1
22	ANT0424-AA01-0381	W7 - P1 - GREEN - ACCESS	2
23	ANT0424-AA01-0431	W7 - P1 - PINK - ACCESS	2
24	ANT0424-AA01-0432	W7 - P2 - GREEN - ACCESS	1
25	ANT0424-AA01-0434	W7 - P2 - PINK - ACCESS	2
26	ANT0424-EXTR-0131	LIFTING POINT A	1
27	ANT0424-EXTR-0136	LIFTING POINT B	1
28	ANT0424-EXTR-0137	LIFTING POINT C	1
N/A	ANT0424-EXTR-0044	43" TV	3
N/A	M5 x 20 CSK SKT BOLT	M5 x 20 CSK SKT BOLT	146
N/A	M5 x 25 CSK SKT BOLT	M5 x 25 CSK SKT BOLT	112
N/A	M8 WASHER - FORM A	M8 WASHER - FORM A	12
N/A	M8 x 16 HEX SCREW	M8 x 16 HEX SCREW	12
	ANT0424-AA02-0006	DISH MOUNTING BOSS	1
29	ANT0424-EXTR-0145	LED MOUNTING BRACKET	4
	ANT0424-EXTR-0144	LED	2

GENERAL NOTES

1. IF IN DOUBT - ASK!
2. ALL DIMENSIONS ARE IN mm UNLESS STATED OTHERWISE.
3. ALL LINEAR DIMENSIONS TO BE ± 1mm UNLESS STATED OTHERWISE.
4. ALL HOLE DIMENSIONS TO BE ± 0.25mm UNLESS STATED OTHERWISE.

CONSTRUCTOR

BUILD PROCESS 1: -	BUILD PROCESS 2:	BUILD No:
BUILD PROCESS 3:	BUILD PROCESS 4:	
BUILD PROCESS 5:	BUILD PROCESS 6:	
BUILD PROCESS 7:	BUILD PROCESS 8:	BUILD QTY:
MATERIAL: N/A	WEIGHT: 1909 kg	1
FINISH: N/A	FINISH QUALITY: STANDARD	

REVISION HISTORY

REV	DESCRIPTION	DRN	DATE
A	ISSUED FOR REVIEW		

T | +44 (0)1423 358 001
E | sales@stageone.co.uk
W | www.stageone.co.uk

THIS DRAWING IS THE COPYRIGHT OF STAGE ONE CREATIVE SERVICES LTD AND SHALL NOT BE DISCLOSED OR COPIED WITHOUT WRITTEN CONSENT

CLIENT: NEWSUBSTANCE LTD
PROJECT: CO-OP LIVE ANTENNA
GROUP: EX - EXTRA
SUBGROUP: TR - EXTRA

DRAWING TYPE	DRAWN BY	PROJECTION	DRAWING SIZE	DRAWING SCALE
SP	ON		A1	1 : 25

DRAWING TITLE: CO-OP LIVE ANTENNA GA
SHEET No. 1 / 1
DRAWING NUMBER: ANT0424-EXTR-0001
REVISION A

Summary of Reaction Loads at Foundation

COO0424 – Co-op Live Sculptures
Analysis Models – Base Reactions

Rev. 01

Date: 16/02/2024

INTRODUCTION

This document provides screenshots of each of the analysis models created by Stage One, showing the unfactored base reactions for each of the loadcases considered.

The base supports shown are as per Stage One's own modelling assumptions. They do not represent the final positions of the embedment bolts. The base support reactions provided in this summary report are purely for the use of the client structural engineer to carry out their own assessment of the foundations required.

The loadcases considered include the structure self-weight (SW), superimposed dead load (cladding, finishes etc.), Live loading (persons, maintenance), Live Snow loading and Wind Loading.

The wind loading has been considered for the most onerous plan directions upon the structures. Note that the reactions shown will be subjected to load reversal for opposing wind cases, and hence should be considered in the foundation designs.

Forces shown are for FX, FY and FZ directions.

Moments shown are for MX, MY and MZ directions.

ANTENNA

Self-Weight (SW)

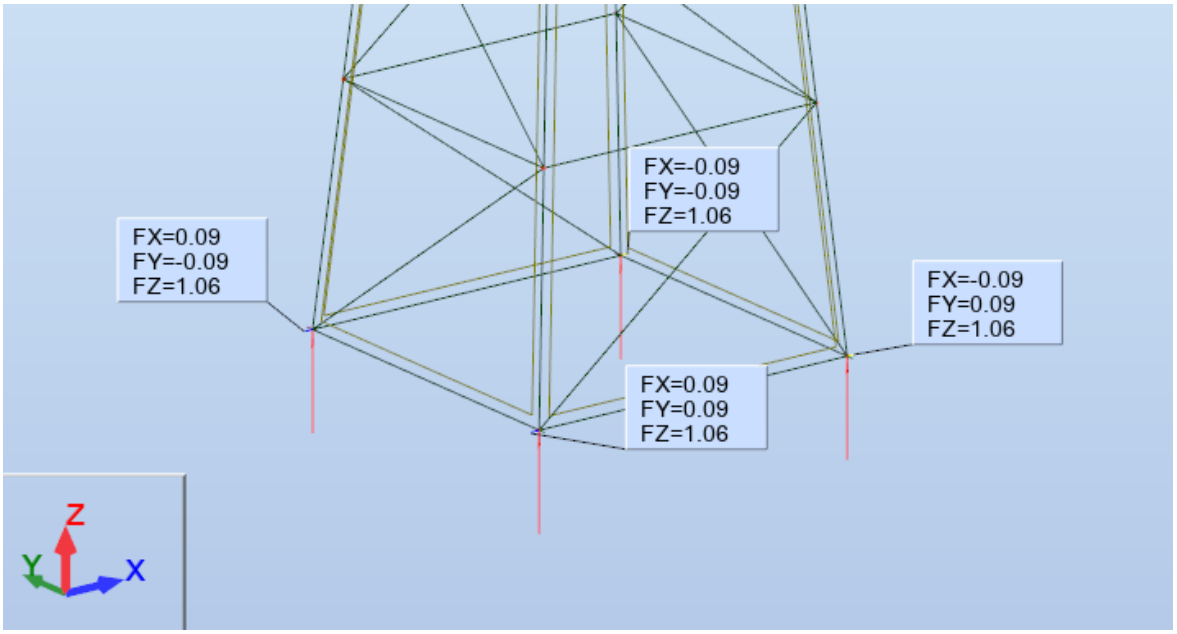

Superimposed Dead Load (SDL)

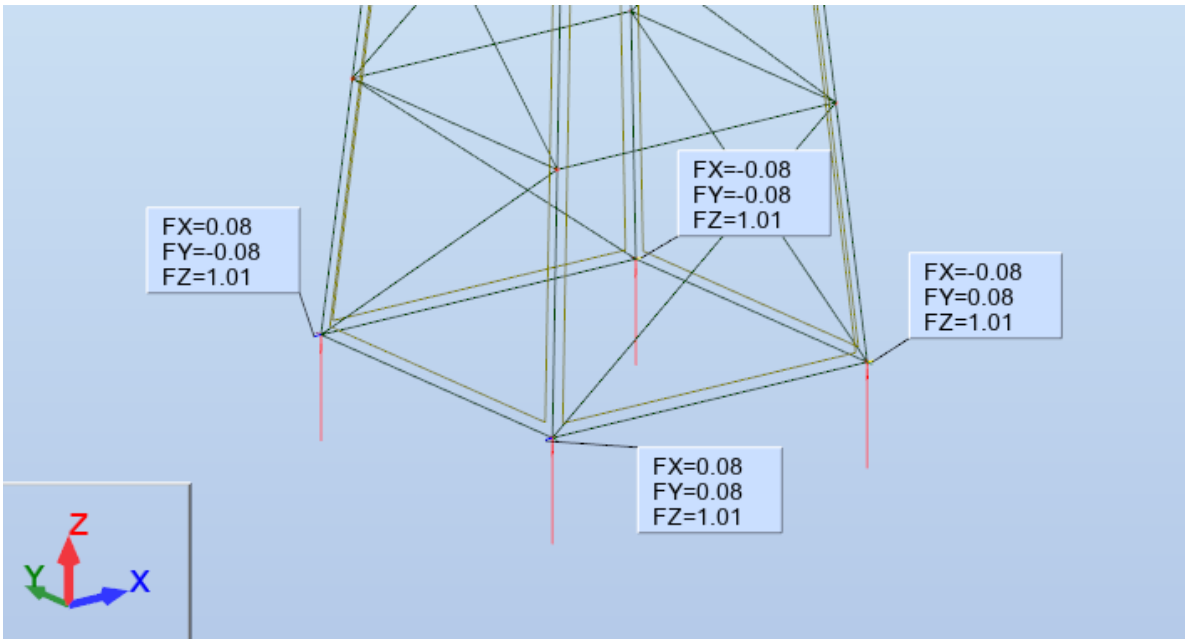

Wind +X Direction

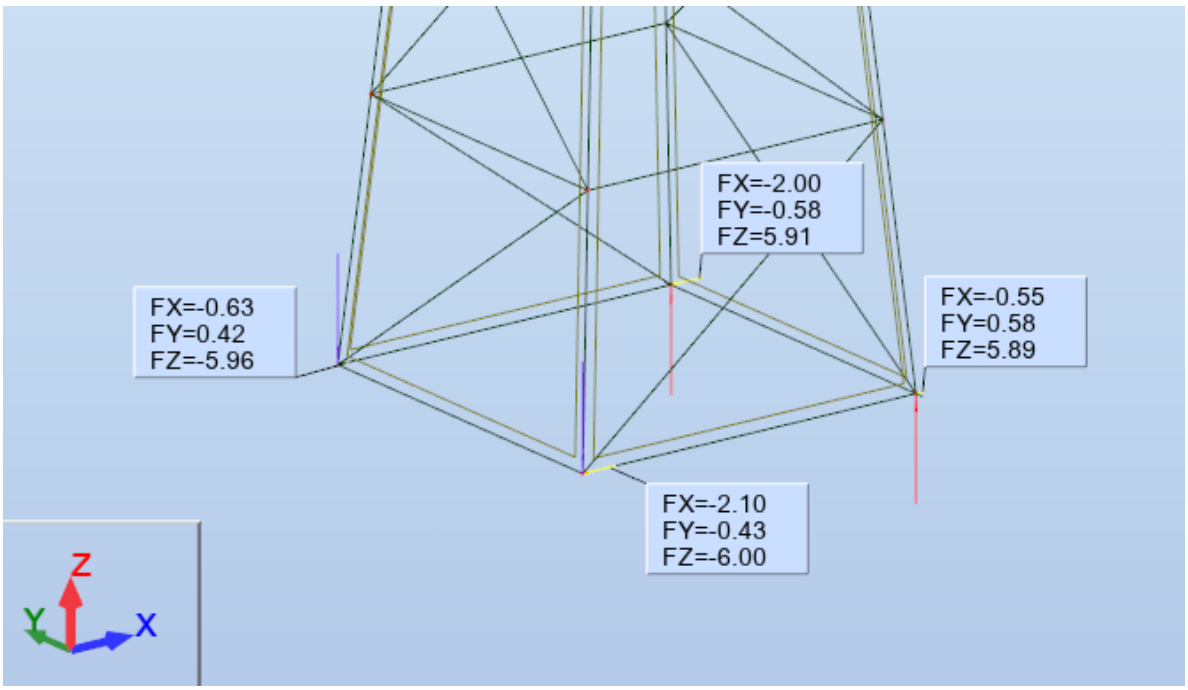

Wind +XY Direction

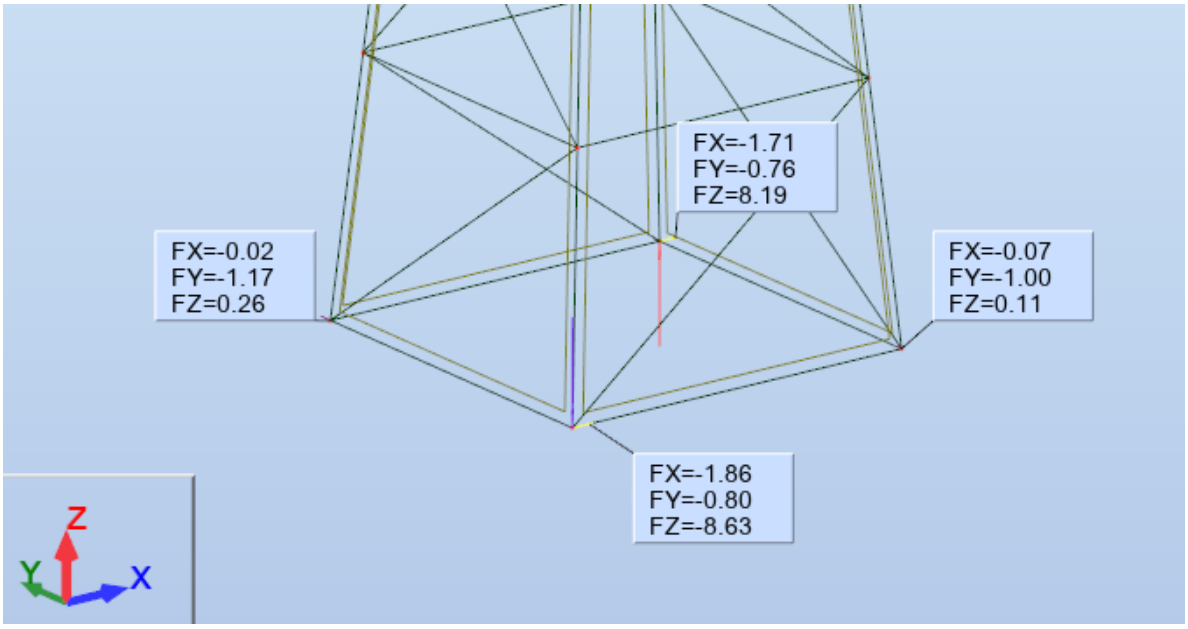

Company:		Page:	1
Address:		Specifier:	
Phone I Fax:	|	E-Mail:	
Design:	ANTENNA	Date:	29/02/2024
Fastening Point:			

Specifier's comments:

1 Input data

Anchor type and size:	**HIT-HY 200-A V3 + HAS-U 5.8 M16**
Return period (service life in years):	50
Item number:	2223869 HAS-U 5.8 M16x260 (insert) / 2378171 HIT-HY 200-A V3 (mortar)
Insert item # alternative:	2390209 HAS 5.8 M16x260
Hilti Filling Set or any suitable annular gap filling solution	
Effective embedment depth:	$h_{ef,act}$ = 200.0 mm ($h_{ef,limit}$ = - mm)
Material:	5.8
Approval No.:	ETA 19/0601
Issued I Valid:	02/06/2023 | -
Proof:	SOFA based on EN 1992-4, Chemical
Stand-off installation:	e_b = 0.0 mm (no stand-off); t = 15.0 mm
Baseplate[CBFEM] :	l_x x l_y x t = 300.0 mm x 300.0 mm x 15.0 mm;
Profile:	Square hollow, 100 x 100 x 3; (L x W x T) = 100.0 mm x 100.0 mm x 3.0 mm
Base material:	uncracked concrete, Custom, $f_{c,cyl}$ = 32.00 N/mm^2; h = 1,000.0 mm, Temp. short/long: 0/0 °C, User-defined partial material safety factor γ_c = 1.500
Installation:	**hammer drilled hole, Installation condition: Dry**
Reinforcement:	No reinforcement or Reinforcement spacing >= 150 mm (any Ø) or >= 100 mm (Ø <= 10 mm)
	no longitudinal edge reinforcement

[CBFEM] - The anchor calculation is based on a component-based Finite Element Method (CBFEM)

Geometry [mm] & Loading [kN, kNm]

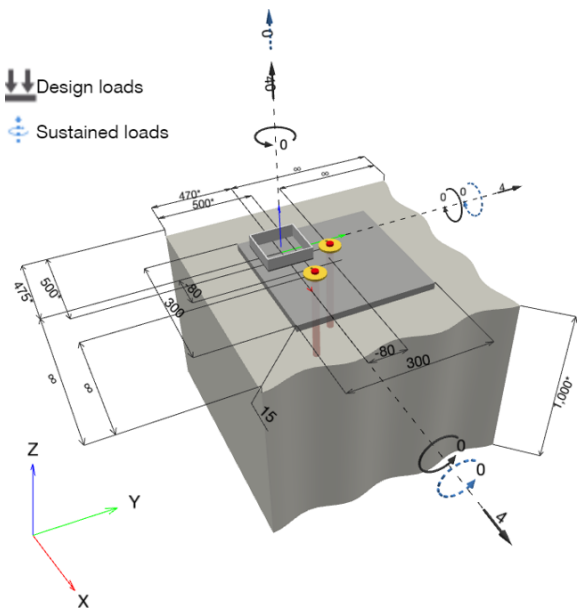

PROFIS Engineering (c) 2003-2024 Hilti AG, FL-9494 Schaan Hilti is a registered Trademark of Hilti AG, Schaan

1.1 Load combination

Case	Description	Forces [kN] / Moments [kNm]	Seismic	Fire	Max. Util. Anchor [%]
1	Combination 1	$N = 40.000$; $V_x = 4.000$; $V_y = 4.000$; $M_x = 0.000$; $M_y = 0.000$; $M_z = 0.000$; $N_{sus} = 0.000$; $M_{x,sus} = 0.000$; $M_{y,sus} = 0.000$;	no	no	86

Input data and results must be checked for conformity with the existing conditions and for plausibility!
PROFIS Engineering (c) 2003-2024 Hilti AG, FL-9494 Schaan Hilti is a registered Trademark of Hilti AG, Schaan

2 Proof I Utilisation (Governing Cases)

		Design values [kN]		Utilization	
Loading	**Proof**	**Load**	**Capacity**	**β_N / β_V [%]**	**Status**
Tension	Steel failure	44.662	52.333	86 / -	OK
Shear	Steel failure (without lever arm)	2.927	37.680	- / 8	OK

Loading	β_N	β_V	α	Utilization $\beta_{N,V}$ [%]	Status
Combined tension and shear loads	0.853	0.072	2.000	74	OK

3 Warnings

- Please consider all details and hints/warnings given in the detailed report!

Fastening meets the design criteria!

Input data and results must be checked for conformity with the existing conditions and for plausibility!
PROFIS Engineering (c) 2003-2024 Hilti AG, FL-9494 Schaan Hilti is a registered Trademark of Hilti AG, Schaan

4 Remarks; Your Cooperation Duties

- Any and all information and data contained in the Software concern solely the use of Hilti products and are based on the principles, formulas and security regulations in accordance with Hilti's technical directions and operating, mounting and assembly instructions, etc., that must be strictly complied with by the user. All figures contained therein are average figures, and therefore use-specific tests are to be conducted prior to using the relevant Hilti product. The results of the calculations carried out by means of the Software are based essentially on the data you put in. Therefore, you bear the sole responsibility for the absence of errors, the completeness and the relevance of the data to be put in by you. Moreover, you bear sole responsibility for having the results of the calculation checked and cleared by an expert, particularly with regard to compliance with applicable norms and permits, prior to using them for your specific facility. The Software serves only as an aid to interpret norms and permits without any guarantee as to the absence of errors, the correctness and the relevance of the results or suitability for a specific application.
- You must take all necessary and reasonable steps to prevent or limit damage caused by the Software. In particular, you must arrange for the regular backup of programs and data and, if applicable, carry out the updates of the Software offered by Hilti on a regular basis. If you do not use the AutoUpdate function of the Software, you must ensure that you are using the current and thus up-to-date version of the Software in each case by carrying out manual updates via the Hilti Website. Hilti will not be liable for consequences, such as the recovery of lost or damaged data or programs, arising from a culpable breach of duty by you.

PROFIS Engineering (c) 2003-2024 Hilti AG, FL-9494 Schaan Hilti is a registered Trademark of Hilti AG, Schaan

Fabrication Drawings

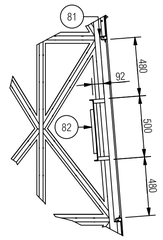

DETAIL M
TV MOUNTING BRACKET
SCALE 1 : 25

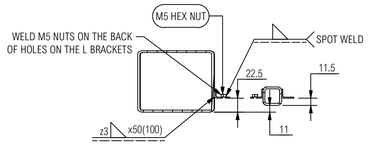

SECTION L - L

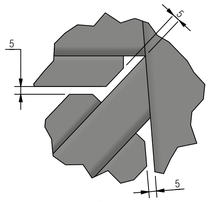

DETAIL E
TYP. L BRACKET SPACING
SCALE 1 : 2

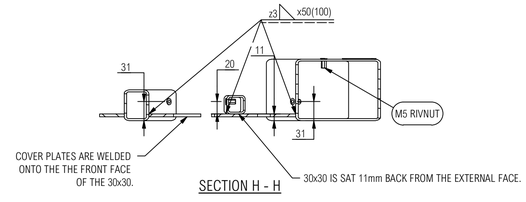

SECTION H - H

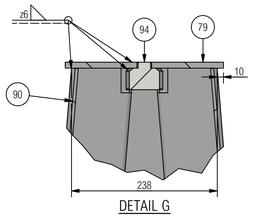

DETAIL G
BOSS WELDING DETAIL
SCALE 1 : 5

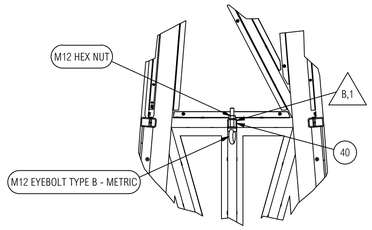

DETAIL K
RIGGING POINT DETAIL
SCALE 1 : 10

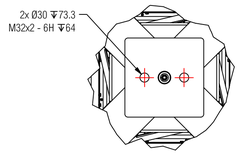

DETAIL J
TOP PLATE DETAIL
SCALE 1 : 10

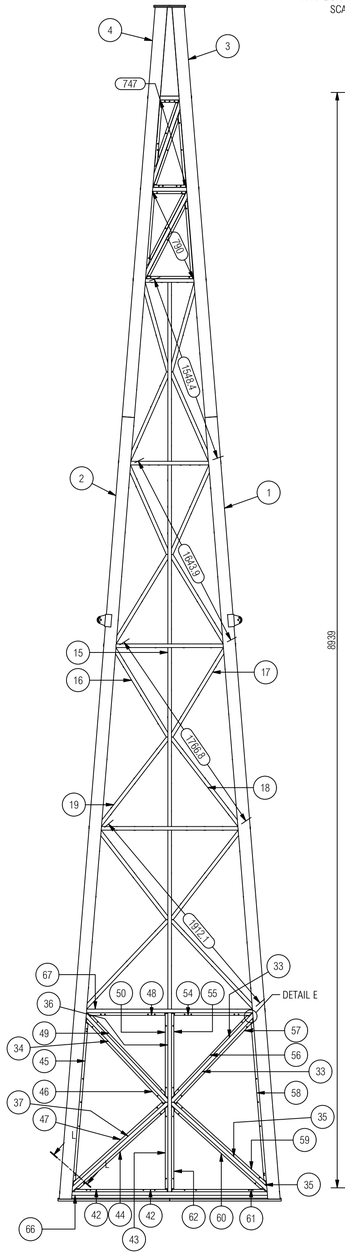

SECTION D - D
BACK
COVER PLATES HIDDEN

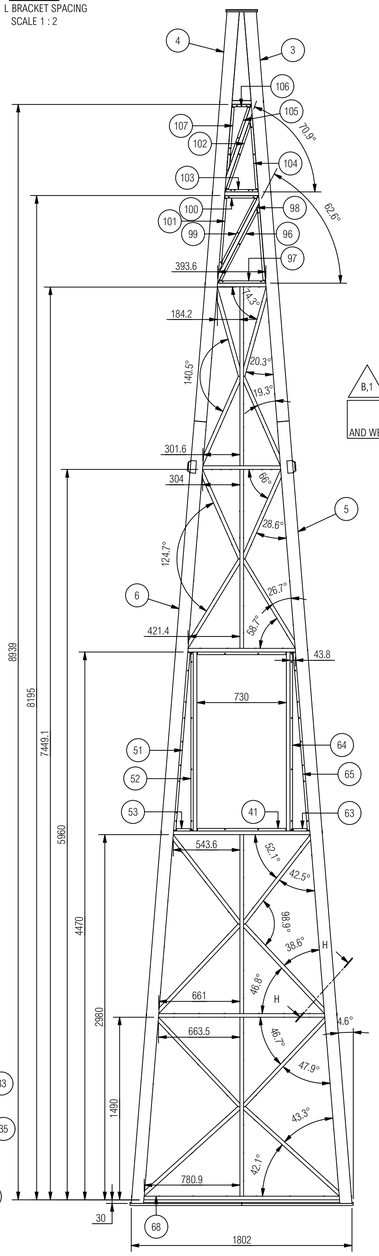

SECTION C - C
FRONT
COVER PLATES HIDDEN
LEFT AND RIGHT SIDES ARE THE SAME EXCEPT FOR THE 100x100 LOWER MEMBERS

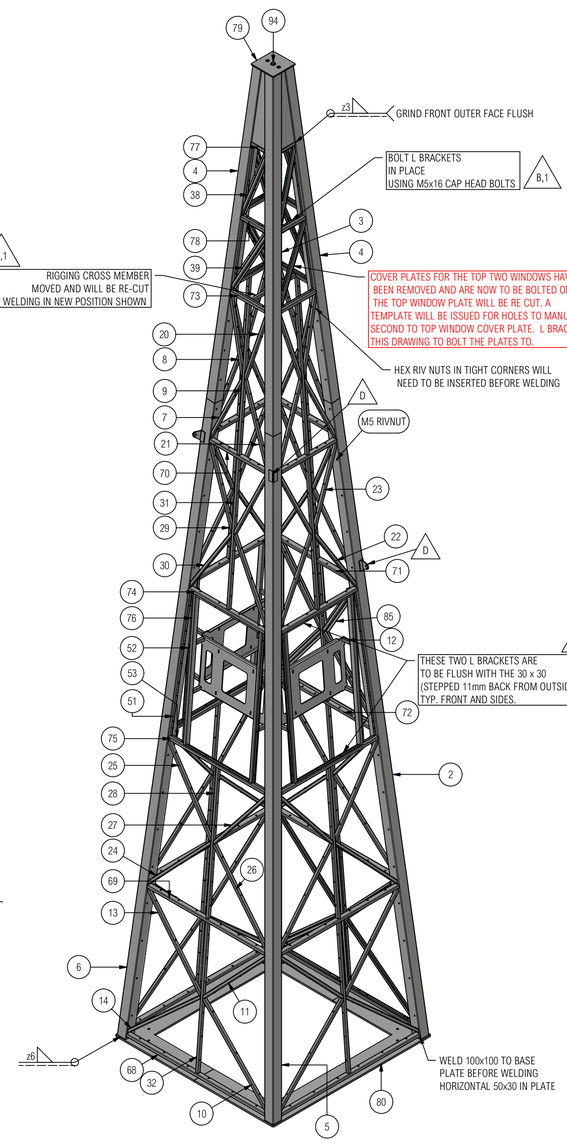

ISOMETRIC
COVER PLATES HIDDEN

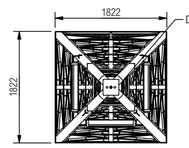

PLAN

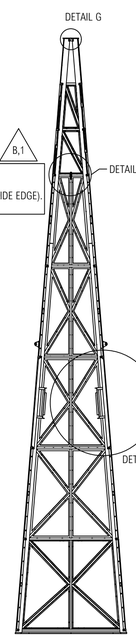

SECTION F - F

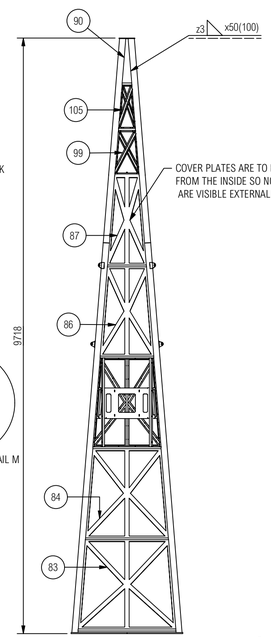

FRONT

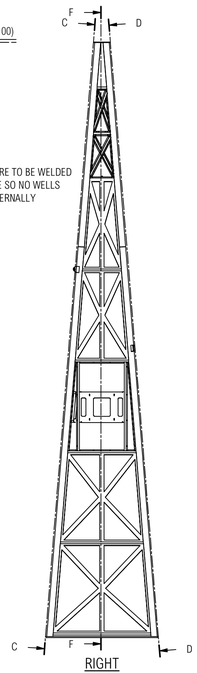

RIGHT

BILL OF MATERIALS

ITEM	PART NUMBER	REV	DESCRIPTION	MATERIAL	CUT	QTY
56	ANT0424-AA01-0392	A	FRAME MEMBER - L SECTION	50 x 30 x 2 RHS - MS 235 (CF)	YES	1
57	ANT0424-AA01-0393	A	FRAME MEMBER - L SECTION	50 x 30 x 2 RHS - MS 235 (CF)	YES	1
58	ANT0424-AA01-0394	A	FRAME MEMBER - L SECTION	50 x 30 x 2 RHS - MS 235 (CF)	YES	1
59	ANT0424-AA01-0395	A	FRAME MEMBER - L SECTION	50 x 30 x 2 RHS - MS 235 (CF)	YES	1
60	ANT0424-AA01-0396	A	FRAME MEMBER - L SECTION	50 x 30 x 2 RHS - MS 235 (CF)	YES	1
61	ANT0424-AA01-0397	A	FRAME MEMBER - L SECTION	50 x 30 x 2 RHS - MS 235 (CF)	YES	1
62	ANT0424-AA01-0398	A	FRAME MEMBER - L SECTION	50 x 30 x 2 RHS - MS 235 (CF)	YES	1
63	ANT0424-AA01-0410	A	FRAME MEMBER - L SECTION	50 x 30 x 2 RHS - MS 235 (CF)	YES	3
64	ANT0424-AA01-0411	A	FRAME MEMBER - L SECTION	50 x 30 x 2 RHS - MS 235 (CF)	YES	3
65	ANT0424-AA01-0412	A	FRAME MEMBER - L SECTION	50 x 30 x 2 RHS - MS 235 (CF)	YES	3
66	ANT0424-AA01-0072	A	FRAME MEMBER	50 x 30 x 3 RHS - MS S235 (CF)	YES	1
67	ANT0424-AA01-0108	A	FRAME MEMBER	50 x 30 x 3 RHS - MS S235 (CF)	YES	1
68	ANT0424-AA01-0116	A	FRAME MEMBER	50 x 30 x 3 RHS - MS S235 (CF)	YES	3
69	ANT0424-AA01-0117	A	FRAME MEMBER	50 x 30 x 3 RHS - MS S235 (CF)	YES	3
70	ANT0424-AA01-0262	A	FRAME MEMBER	50 x 30 x 3 RHS - MS S235 (CF)	YES	4
71	ANT0424-AA01-0263	A	FRAME MEMBER	50 x 30 x 3 RHS - MS S235 (CF)	YES	1
72	ANT0424-AA01-0264	A	FRAME MEMBER	50 x 30 x 3 RHS - MS S235 (CF)	YES	1
73	ANT0424-AA01-0265	A	FRAME MEMBER	50 x 30 x 3 RHS - MS S235 (CF)	YES	4
74	ANT0424-AA01-0339	A	FRAME MEMBER	50 x 30 x 3 RHS - MS S235 (CF)	YES	3
75	ANT0424-AA01-0340	A	FRAME MEMBER	50 x 30 x 3 RHS - MS S235 (CF)	YES	3
76	ANT0424-AA01-0362	A	FRAME MEMBER	50 x 30 x 3 RHS - MS S235 (CF)	YES	6
77	ANT0424-AA01-0374	A	FRAME MEMBER	50 x 30 x 3 RHS - MS S235 (CF)	YES	4
78	ANT0424-AA01-0383	A	FRAME MEMBER	50 x 30 x 3 RHS - MS S235 (CF)	YES	4
80	ANT0424-AA01-0065	B	BASE PLATE	MS PLATE S275 - 15 mm	YES	2
79	ANT0424-AA01-0359	A	TOP PLATE	MS PLATE S275 - 10 mm	YES	1
81	ANT0424-AA01-0361	A	END CAP	MS PLATE S275 - 3 mm	YES	12
82	ANT0424-AA01-0097	A	TV MOUNTING PLATE	MS PLATE S275 - 5 mm	YES	3
84	ANT0424-AA01-0201	A	WINDOW 2 COVER PLATE	MS PLATE S275 - 5 mm	YES	4
87	ANT0424-AA01-0203	A	WINDOW 5 COVER PLATE	MS PLATE S275 - 5 mm	YES	4
86	ANT0424-AA01-0204	A	WINDOW 4 COVER PLATE	MS PLATE S275 - 5 mm	YES	4
85	ANT0424-AA01-0210	A	WINDOW 3 COVER PLATE	MS PLATE S275 - 5 mm	YES	1
83	ANT0424-AA01-0352	A	WINDOW 1 COVER PLATE	MS PLATE S275 - 5 mm	YES	3
90	ANT0424-AA01-0407	A	WINDOW 8 COVER PLATE	MS PLATE S275 - 5 mm	YES	4
91	M12 HEX NUT		M12 HEX NUT	AS SUPPLIED	NO	1
92	M5 HEX NUT		M5 HEX NUT	AS SUPPLIED	NO	234
93	M5 RIVNUT		M5 RIVNUT	AS SUPPLIED	NO	998
94	ANT0424-AA01-0459	A	LIFTING BOSS	MILD STEEL EN3B - 70 mm	NO	1
95	ANT0424-AA01-0408	A	M12 EYEBOLT TYPE B - METRIC	MILD STEEL EN8	NO	1
96	ANT0424-AA01-0445	A	L SECTION - W 6 - 3	50 x 30 x 2 SHS - MS S235 (CF)	YES	4
97	ANT0424-AA01-0446	A	L SECTION - W 6 - 1	50 x 30 x 2 SHS - MS S235 (CF)	YES	4
98	ANT0424-AA01-0447	A	L SECTION - W 6 - 2	50 x 30 x 2 SHS - MS S235 (CF)	YES	4
99	ANT0424-AA01-0448	A	L SECTION - W 6 - 4	50 x 30 x 2 SHS - MS S235 (CF)	YES	4
100	ANT0424-AA01-0449	A	L SECTION - W 6 - 6	50 x 30 x 2 SHS - MS S235 (CF)	YES	4
101	ANT0424-AA01-0451	A	L SECTION - W 6 - 5	50 x 30 x 2 SHS - MS S235 (CF)	YES	4
102	ANT0424-AA01-0457	A	L SECTION - W 7 - 3	50 x 30 x 2 SHS - MS S235 (CF)	YES	4
103	ANT0424-AA01-0456	A	L SECTION - W 7 - 1	50 x 30 x 2 SHS - MS S235 (CF)	YES	4
104	ANT0424-AA01-0455	A	L SECTION - W 7 - 2	50 x 30 x 2 SHS - MS S235 (CF)	YES	4
105	ANT0424-AA01-0454	A	L SECTION - W 7 - 4	50 x 30 x 2 SHS - MS S235 (CF)	YES	4
106	ANT0424-AA01-0453	A	L SECTION - W 7 - 6	50 x 30 x 2 SHS - MS S235 (CF)	YES	4
107	ANT0424-AA01-0452	A	L SECTION - W 7 - 5	50 x 30 x 2 SHS - MS S235 (CF)	YES	4
108	ANT0424-AA01-0473	A	FOLDED PLATE	MS PLATE S275 - 5 mm	YES	4
109	ANT0424-AA02-0005	A	BOLTING PLATE	MS PLATE S275 - 5 mm	YES	4

ISSUED REV C
ISSUED SEPERATLY
ISSUED REV B
ADDED REV D
REVISED REV B - TO BE RE CUT

BILL OF MATERIALS

ITEM	PART NUMBER	REV	DESCRIPTION	MATERIAL	CUT	QTY
1	ANT0424-AA01-0027	A	FRAME MEMBER	100 x 100 x 3 SHS - MS S235 (CF)	YES	1
2	ANT0424-AA01-0261	A	FRAME MEMBER	100 x 100 x 3 SHS - MS S235 (CF)	YES	1
3	ANT0424-AA01-0384	A	FRAME MEMBER	100 x 100 x 3 SHS - MS S235 (CF)	YES	2
4	ANT0424-AA01-0385	A	FRAME MEMBER	100 x 100 x 3 SHS - MS S235 (CF)	YES	2
5	ANT0424-AA01-0443	A	FRAME MEMBER	100 x 100 x 3 SHS - MS S235 (CF)	YES	1
6	ANT0424-AA01-0444	A	FRAME MEMBER	100 x 100 x 3 SHS - MS S235 (CF)	YES	1
7	ANT0424-AA01-0084	A	FRAME MEMBER	30 x 30 x 3 SHS - MS S235 (CF)	YES	4
8	ANT0424-AA01-0085	A	FRAME MEMBER	30 x 30 x 3 SHS - MS S235 (CF)	YES	4
9	ANT0424-AA01-0089	A	FRAME MEMBER	30 x 30 x 3 SHS - MS S235 (CF)	YES	4
10	ANT0424-AA01-0091	A	FRAME MEMBER	30 x 30 x 3 SHS - MS S235 (CF)	YES	3
11	ANT0424-AA01-0092	A	FRAME MEMBER	30 x 30 x 3 SHS - MS S235 (CF)	YES	3
12	ANT0424-AA01-0096	A	FRAME MEMBER	30 x 30 x 3 SHS - MS S235 (CF)	YES	12
13	ANT0424-AA01-0197	A	FRAME MEMBER	30 x 30 x 3 SHS - MS S235 (CF)	YES	3
14	ANT0424-AA01-0198	A	FRAME MEMBER	30 x 30 x 3 SHS - MS S235 (CF)	YES	3
15	ANT0424-AA01-0205	A	FRAME MEMBER	30 x 30 x 3 SHS - MS S235 (CF)	YES	1
16	ANT0424-AA01-0206	A	FRAME MEMBER	30 x 30 x 3 SHS - MS S235 (CF)	YES	1
17	ANT0424-AA01-0207	A	FRAME MEMBER	30 x 30 x 3 SHS - MS S235 (CF)	YES	1
18	ANT0424-AA01-0208	A	FRAME MEMBER	30 x 30 x 3 SHS - MS S235 (CF)	YES	1
19	ANT0424-AA01-0209	A	FRAME MEMBER	30 x 30 x 3 SHS - MS S235 (CF)	YES	1
20	ANT0424-AA01-0213	A	FRAME MEMBER	30 x 30 x 3 SHS - MS S235 (CF)	YES	4
21	ANT0424-AA01-0214	A	FRAME MEMBER	30 x 30 x 3 SHS - MS S235 (CF)	YES	4
22	ANT0424-AA01-0215	A	FRAME MEMBER	30 x 30 x 3 SHS - MS S235 (CF)	YES	4
23	ANT0424-AA01-0216	B	FRAME MEMBER	30 x 30 x 3 SHS - MS S235 (CF)	YES	4
24	ANT0424-AA01-0217	A	FRAME MEMBER	30 x 30 x 3 SHS - MS S235 (CF)	YES	4
25	ANT0424-AA01-0218	A	FRAME MEMBER	30 x 30 x 3 SHS - MS S235 (CF)	YES	4
26	ANT0424-AA01-0266	A	FRAME MEMBER	30 x 30 x 3 SHS - MS S235 (CF)	YES	4
27	ANT0424-AA01-0267	A	FRAME MEMBER	30 x 30 x 3 SHS - MS S235 (CF)	YES	4
28	ANT0424-AA01-0281	A	FRAME MEMBER	30 x 30 x 3 SHS - MS S235 (CF)	YES	4
29	ANT0424-AA01-0282	A	FRAME MEMBER	30 x 30 x 3 SHS - MS S235 (CF)	YES	4
30	ANT0424-AA01-0283	A	FRAME MEMBER	30 x 30 x 3 SHS - MS S235 (CF)	YES	4
31	ANT0424-AA01-0284	A	FRAME MEMBER	30 x 30 x 3 SHS - MS S235 (CF)	YES	4
32	ANT0424-AA01-0337	A	FRAME MEMBER	30 x 30 x 3 SHS - MS S235 (CF)	YES	3
33	ANT0424-AA01-0341	A	FRAME MEMBER	30 x 30 x 3 SHS - MS S235 (CF)	YES	1
34	ANT0424-AA01-0342	A	FRAME MEMBER	30 x 30 x 3 SHS - MS S235 (CF)	YES	1
35	ANT0424-AA01-0343	A	FRAME MEMBER	30 x 30 x 3 SHS - MS S235 (CF)	YES	1
36	ANT0424-AA01-0344	A	FRAME MEMBER	30 x 30 x 3 SHS - MS S235 (CF)	YES	1
37	ANT0424-AA01-0345	A	FRAME MEMBER	30 x 30 x 3 SHS - MS S235 (CF)	YES	1
38	ANT0424-AA01-0375	A	FRAME MEMBER	30 x 30 x 3 SHS - MS S235 (CF)	YES	4
39	ANT0424-AA01-0376	A	FRAME MEMBER	30 x 30 x 3 SHS - MS S235 (CF)	YES	4
40	ANT0424-AA01-0416	B	FRAME MEMBER	30 x 30 x 3 SHS - MS S235 (CF)	YES	1
41	ANT0424-AA01-0199	A	FRAME MEMBER - L SECTION	50 x 30 x 2 RHS - MS 235 (CF)	YES	6
42	ANT0424-AA01-0349	A	FRAME MEMBER - L SECTION	50 x 30 x 2 RHS - MS 235 (CF)	YES	1
43	ANT0424-AA01-0350	A	FRAME MEMBER - L SECTION	50 x 30 x 2 RHS - MS 235 (CF)	YES	1
44	ANT0424-AA01-0351	A	FRAME MEMBER - L SECTION	50 x 30 x 2 RHS - MS 235 (CF)	YES	1
45	ANT0424-AA01-0353	A	FRAME MEMBER - L SECTION	50 x 30 x 2 RHS - MS 235 (CF)	YES	1
46	ANT0424-AA01-0354	A	FRAME MEMBER - L SECTION	50 x 30 x 2 RHS - MS 235 (CF)	YES	1
47	ANT0424-AA01-0355	A	FRAME MEMBER - L SECTION	50 x 30 x 2 RHS - MS 235 (CF)	YES	1
48	ANT0424-AA01-0356	A	FRAME MEMBER - L SECTION	50 x 30 x 2 RHS - MS 235 (CF)	YES	1
49	ANT0424-AA01-0357	A	FRAME MEMBER - L SECTION	50 x 30 x 2 RHS - MS 235 (CF)	YES	1
50	ANT0424-AA01-0358	A	FRAME MEMBER - L SECTION	50 x 30 x 2 RHS - MS 235 (CF)	YES	1
51	ANT0424-AA01-0386	A	FRAME MEMBER - L SECTION	50 x 30 x 2 RHS - MS 235 (CF)	YES	3
52	ANT0424-AA01-0387	A	FRAME MEMBER - L SECTION	50 x 30 x 2 RHS - MS 235 (CF)	YES	3
53	ANT0424-AA01-0388	A	FRAME MEMBER - L SECTION	50 x 30 x 2 RHS - MS 235 (CF)	YES	3
54	ANT0424-AA01-0390	A	FRAME MEMBER - L SECTION	50 x 30 x 2 RHS - MS 235 (CF)	YES	1
55	ANT0424-AA01-0391	A	FRAME MEMBER - L SECTION	50 x 30 x 2 RHS - MS 235 (CF)	YES	1

GENERAL NOTES

DO NOT ETCH

1. IF IN DOUBT - ASK!
2. ALL DIMENSIONS ARE IN mm UNLESS STATED OTHERWISE.
3. ALL LINEAR DIMENSIONS TO BE ± 1mm UNLESS STATED OTHERWISE.
4. ALL HOLE DIMENSIONS TO BE ± 0.25mm UNLESS STATED OTHERWISE.
5. USE WELD PROCEDURES WP01 TO WP09 WHERE APPLICABLE.
6. THIS PROJECT IS CE MARKED - WELD TESTING REQUIRED - SUB-CONTRACT PROCESS IN CONSTRUCTOR BOX.
7. PART(S) REQUIRE TAPPED HOLES.
8. SECOND SUBCONTRACT PROCESS IS FOR PAINTING
9. FOLDING DETAIL INNER RADIUS, USING 40mm 'v' WITH 6mm INNER RADIUS

CONSTRUCTOR

BUILD PROCESS 1:	LASER PLATE	BUILD PROCESS 2:	LASER TUBE	BUILD No:	1 - 2
BUILD PROCESS 3:	PRESS BRAKE	BUILD PROCESS 4:	METALWORK		
BUILD PROCESS 5:	SUB-CONTRACT	BUILD PROCESS 6:	SUB-CONTRACT		
BUILD PROCESS 7:		BUILD PROCESS 8:		BUILD QTY:	2
MATERIAL:	RHS, SHS & MS PLATE	WEIGHT:	1215 kg		
FINISH:	SHOT BLASTED & PAINTED PSX 700 RAL 9003 (SIGNAL WHITE)	FINISH QUALITY:	HIGH		

REVISION HISTORY

REV	DESCRIPTION	DRN	DATE
D	DISH MOUNTING BRACKETS ADDED - SEE SHEET 3		
C,1	BASE PLATE REVISED AND TAKEN OFF HOLD	ON	01/03/2024
B,1	TOP WINDOW COVER PLATES REMOVED AND TO BE ADDED ON THEIR OWN DRAWING. RIGGING CROSS MEMBER MOVED. L BRACKETS ADDED FOR TOP TWO WINDOWS	ON	27/02/2024
A,1	ISSUED FOR MANUFACTURING	ON	22/02/2024

T | +44 (0)1423 358 001
E | sales@stageone.co.uk
W | www.stageone.co.uk

THIS DRAWING IS THE COPYRIGHT OF STAGE ONE CREATIVE SERVICES LTD AND SHALL NOT BE DISCLOSED OR COPIED WITHOUT WRITTEN CONSENT

CLIENT:	NEWSUBSTANCE LTD
PROJECT:	CO-OP LIVE ANTENNA
GROUP:	AA - MANUFACTURED ITEMS
SUBGROUP:	01 - LIGHT ANTENNA
DRAWING TYPE	MF
DRAWN BY	ON
PROJECTION	
DRAWING SIZE	A1
DRAWING SCALE	1 : 50
DRAWING TITLE:	ANTENNA STEEL FRAME
SHEET No.	1 / 3
DRAWING NUMBER:	ANT0424-AA01-0001
REVISION	D

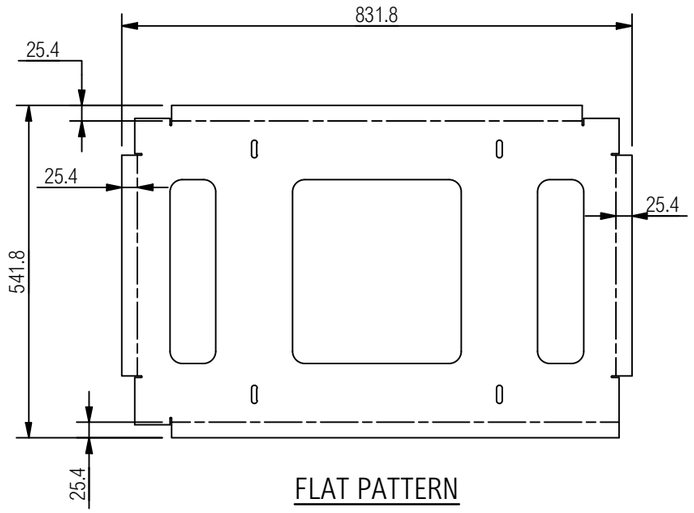

FLAT PATTERN

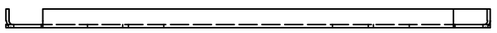

PLAN

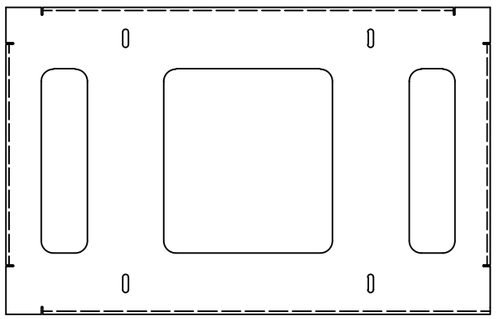

ANT0424-AA01-0097

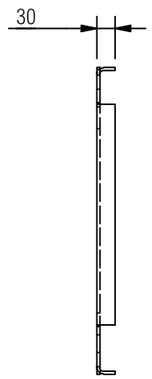

SIDE

GENERAL NOTES

DO NOT ETCH

1. IF IN DOUBT - ASK!
2. ALL DIMENSIONS ARE IN mm UNLESS STATED OTHERWISE.
3. ALL LINEAR DIMENSIONS TO BE ± 1mm UNLESS STATED OTHERWISE.
4. ALL HOLE DIMENSIONS TO BE ± 0.25mm UNLESS STATED OTHERWISE.
5. USE WELD PROCEDURES WP01 TO WP09 WHERE APPLICABLE.
6. THIS PROJECT IS CE MARKED - WELD TESTING REQUIRED - SUB-CONTRACT PROCESS IN CONSTRUCTOR BOX.
7. PART(S) REQUIRE TAPPED HOLES.
8. SECOND SUBCONTRACT PROCESS IS FOR PAINTING
9. FOLDING DETAIL INNER RADIUS, USING 40mm 'v' WITH 6mm INNER RADIUS

CONSTRUCTOR

BUILD PROCESS 1:	LASER PLATE	BUILD PROCESS 2:	LASER TUBE	BUILD No:	1 - 2
BUILD PROCESS 3:	PRESS BRAKE	BUILD PROCESS 4:	METALWORK		
BUILD PROCESS 5:	SUB-CONTRACT	BUILD PROCESS 6:	SUB-CONTRACT		
BUILD PROCESS 7:		BUILD PROCESS 8:		BUILD QTY:	2
MATERIAL:	RHS, SHS & MS PLATE	WEIGHT:	12 kg		
FINISH:	SHOT BLASTED & PAINTED PSX 700 RAL 9003 (SIGNAL WHITE)	FINISH QUALITY:	HIGH		

REVISION HISTORY

REV	DESCRIPTION	DRN	DATE
D	DISH MOUNTING BRACKETS ADDED - SEE SHEET 3		
C,1	BASE PLATE REVISED AND TAKEN OFF HOLD	ON	01/03/2024
B,1	TOP WINDOW COVER PLATES REMOVED AND TO BE ADDED ON THEIR OWN DRAWING. RIGGING CROSS MEMBER MOVED. L BRACKETS ADDED FOR TOP TWO WINDOWS	ON	27/02/2024
A,1	ISSUED FOR MANUFACTURING	ON	22/02/2024

T | +44 (0)1423 358 001
E | sales@stageone.co.uk
W | www.stageone.co.uk

THIS DRAWING IS THE COPYRIGHT OF STAGE ONE CREATIVE SERVICES LTD AND SHALL NOT BE DISCLOSED OR COPIED WITHOUT WRITTEN CONSENT

CLIENT:	NEWSUBSTANCE LTD
PROJECT:	CO-OP LIVE ANTENNA
GROUP:	AA - MANUFACTURED ITEMS
SUBGROUP:	01 - LIGHT ANTENNA

DRAWING TYPE	DRAWN BY	PROJECTION	DRAWING SIZE	DRAWING SCALE
MF	ON		A3	1 : 10

DRAWING TITLE: ANTENNA STEEL FRAME	SHEET No. 2 / 3
DRAWING NUMBER: ANT0424-AA01-0001	REVISION D

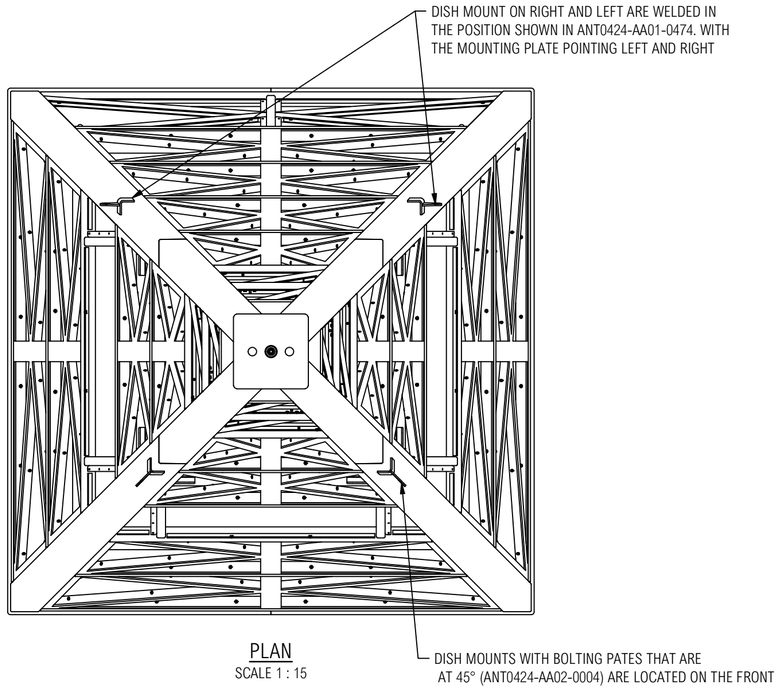

PLAN
SCALE 1 : 15

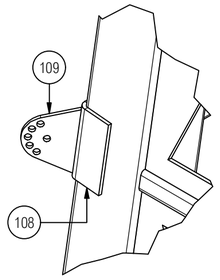

DETAIL R
SCALE 1 : 5

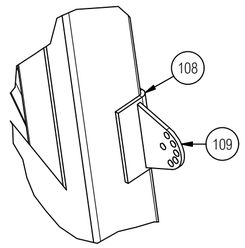

DETAIL T
SCALE 1 : 5

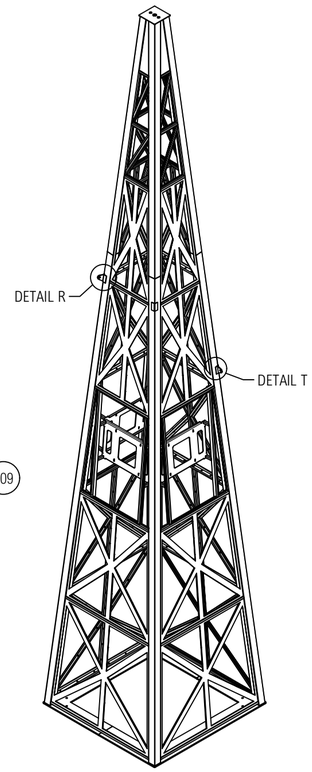

ISOMETRIC

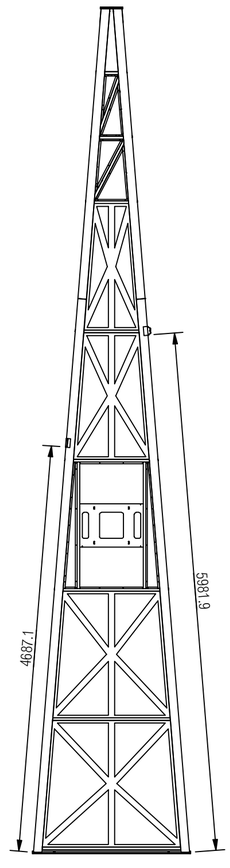

SECTION N - N
LEFT

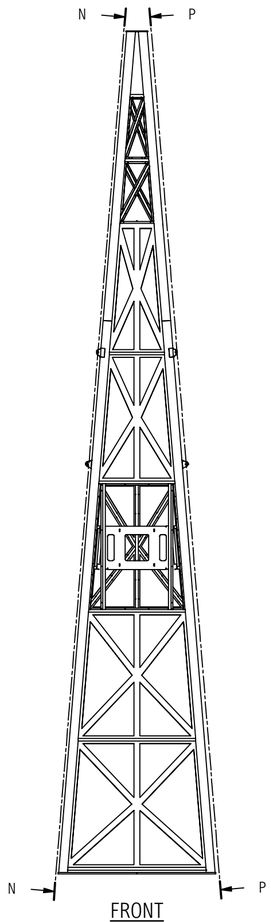

FRONT

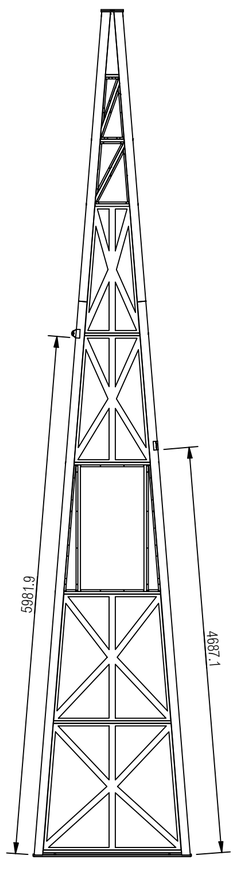

SECTION P - P
RIGHT

2 OFF

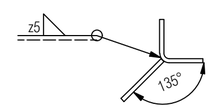

PLAN

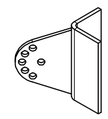

ISMETRIC

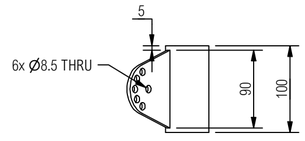

FRONT
ANT0424-AA02-0004

2 OFF

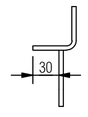

PLAN

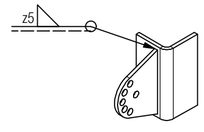

ISOMETRIC

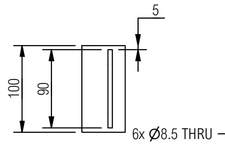

FRONT
ANT0424-AA01-0474

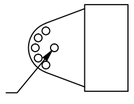

SIDE

BILL OF MATERIALS

ITEM	PART NUMBER	REV	DESCRIPTION	MATERIAL	CUT	QTY
108	ANT0424-AA01-0473	A	FOLDED PLATE	MS PLATE S275 - 5 mm	YES	4
109	ANT0424-AA02-0005	A	BOLTING PLATE	MS PLATE S275 - 5 mm	YES	4

GENERAL NOTES

CONSTRUCTOR

BUILD PROCESS 1:	LASER PLATE	BUILD PROCESS 2:	LASER TUBE	BUILD No: 1 - 2
BUILD PROCESS 3:	PRESS BRAKE	BUILD PROCESS 4:	METALWORK	
BUILD PROCESS 5:	SUB-CONTRACT	BUILD PROCESS 6:	SUB-CONTRACT	
BUILD PROCESS 7:		BUILD PROCESS 8:		BUILD QTY: 2
MATERIAL:	RHS, SHS & MS PLATE	WEIGHT:	1215 kg	
FINISH:	SHOT BLASTED & PAINTED PSX 700 RAL 9003 (SIGNAL WHITE)	FINISH QUALITY:	HIGH	

REVISION HISTORY

REV	DESCRIPTION	DRN	DATE
D	DISH MOUNTING BRACKETS ADDED - SEE SHEET 3		
C,1	BASE PLATE REVISED AND TAKEN OFF HOLD	ON	01/03/2024
B,1	TOP WINDOW COVER PLATES REMOVED AND TO BE ADDED ON THEIR OWN DRAWING. RIGGING CROSS MEMBER MOVED. L BRACKETS ADDED FOR TOP TWO WINDOWS	ON	27/02/2024
A,1	ISSUED FOR MANUFACTURING	ON	22/02/2024

T | +44 (0)1423 358 001
E | sales@stageone.co.uk
W | www.stageone.co.uk

THIS DRAWING IS THE COPYRIGHT OF STAGE ONE CREATIVE SERVICES LTD AND SHALL NOT BE DISCLOSED OR COPIED WITHOUT WRITTEN CONSENT

CLIENT:	NEWSUBSTANCE LTD
PROJECT:	CO-OP LIVE ANTENNA
GROUP:	AA - MANUFACTURED ITEMS
SUBGROUP:	01 - LIGHT ANTENNA
DRAWING TYPE	MF
DRAWN BY	ON
PROJECTION	
DRAWING SIZE	A2
DRAWING SCALE	1 : 50
DRAWING TITLE:	ANTENNA STEEL FRAME
SHEET No.	3 / 3
DRAWING NUMBER:	ANT0424-AA01-0001
REVISION	D

BILL OF MATERIALS

ITEM	PART NUMBER	REV	DESCRIPTION	MATERIAL	CUT	QTY
111	ANT0424-AA01-0242	A	W3 - P2 - BLUE	PERSPEX S2 7T1F - AZURE BLUE - 8 mm	YES	1
112	ANT0424-AA01-0424	A	W4 - P1 - BLUE	PERSPEX S2 7T1F - AZURE BLUE - 8 mm	YES	4
113	ANT0424-AA01-0425	A	W4 - P2 - BLUE	PERSPEX S2 7T1F - AZURE BLUE - 8 mm	YES	4
114	ANT0424-AA01-0246	A	W4 - P3 - BLUE	PERSPEX S2 7T1F - AZURE BLUE - 8 mm	YES	4
115	ANT0424-AA01-0247	A	W5 - P1 - BLUE	PERSPEX S2 7T1F - AZURE BLUE - 8 mm	YES	5
116	ANT0424-AA01-0428	A	W5 - P2 - BLUE	PERSPEX S2 7T1F - AZURE BLUE - 8 mm	YES	3
117	ANT0424-AA01-0249	A	W5 - P3 - BLUE	PERSPEX S2 7T1F - AZURE BLUE - 8 mm	YES	4
118	ANT0424-AA01-0252	A	W1 - P1 - PINK	PERSPEX S2 8T14 - VIOLET HEATHER - 8 mm	YES	3
119	ANT0424-AA01-0239	A	W2 - P1 - PINK	PERSPEX S2 8T14 - VIOLET HEATHER - 8 mm	YES	3
120	ANT0424-AA01-0436	A	W2 - P3 - PINK	PERSPEX S2 8T14 - VIOLET HEATHER - 8 mm	YES	1
121	ANT0424-AA01-0438	A	W3 - P3 - PINK	PERSPEX S2 8T14 - VIOLET HEATHER - 8 mm	YES	1
122	ANT0424-AA01-0244	A	W4 - P2 - PINK	PERSPEX S2 8T14 - VIOLET HEATHER - 8 mm	YES	4
123	ANT0424-AA01-0440	A	W5 - P2 - PINK	PERSPEX S2 8T14 - VIOLET HEATHER - 8 mm	YES	1
124	ANT0424-AA01-0429	A	W5 - P3 - PINK	PERSPEX S2 8T14 - VIOLET HEATHER - 8 mm	YES	3
125	M5 x 16 SKT CAP SCREW		M5 x 16 SKT CAP SCREW	AS SUPPLIED	NO	940

BILL OF MATERIALS

ITEM	PART NUMBER	REV	DESCRIPTION	MATERIAL	CUT	QTY
86	ANT0424-AA01-0297	A	L SECTION - W 5 - 7 R	50 x 30 x 2 RHS - MS S235 (CF)	YES	4
87	ANT0424-AA01-0301	A	L SECTION - W 5 - 8 L	50 x 30 x 2 RHS - MS S235 (CF)	YES	4
88	ANT0424-AA01-0298	A	L SECTION - W 5 - 8 R	50 x 30 x 2 RHS - MS S235 (CF)	YES	4
89	ANT0424-AA01-0300	A	L SECTION - W 5 - 9 L	50 x 30 x 2 RHS - MS S235 (CF)	YES	4
90	ANT0424-AA01-0299	A	L SECTION - W 5 - 9 R	50 x 30 x 2 RHS - MS S235 (CF)	YES	4
91	ANT0424-AA01-0420	A	W1 - P2 - GREEN	PERSPEX S2 6T7A - JADE GREEN - 8 mm	YES	3
92	ANT0424-AA01-0250	A	W1 - P3 - GREEN	PERSPEX S2 6T7A - JADE GREEN - 8 mm	YES	3
93	ANT0424-AA01-0422	A	W2 - P1 - GREEN	PERSPEX S2 6T7A - JADE GREEN - 8 mm	YES	4
94	ANT0424-AA01-0430	A	W2 - P2 - GREEN	PERSPEX S2 6T7A - JADE GREEN - 8 mm	YES	3
95	ANT0424-AA01-0423	A	W2 - P3 - GREEN	PERSPEX S2 6T7A - JADE GREEN - 8 mm	YES	3
96	ANT0424-AA01-0241	A	W3 - P1 - GREEN	PERSPEX S2 6T7A - JADE GREEN - 8 mm	YES	1
97	ANT0424-AA01-0437	A	W3 - P2 - GREEN	PERSPEX S2 6T7A - JADE GREEN - 8 mm	YES	1
98	ANT0424-AA01-0243	A	W3 - P3 - GREEN	PERSPEX S2 6T7A - JADE GREEN - 8 mm	YES	1
99	ANT0424-AA01-0245	A	W4 - P1 - GREEN	PERSPEX S2 6T7A - JADE GREEN - 8 mm	YES	4
100	ANT0424-AA01-0426	A	W4 - P3 - GREEN	PERSPEX S2 6T7A - JADE GREEN - 8 mm	YES	4
101	ANT0424-AA01-0427	A	W5 - P1 - GREEN	PERSPEX S2 6T7A - JADE GREEN - 8 mm	YES	3
102	ANT0424-AA01-0248	A	W5 - P2 - GREEN	PERSPEX S2 6T7A - JADE GREEN - 8 mm	YES	4
103	ANT0424-AA01-0441	A	W5 - P3 - GREEN	PERSPEX S2 6T7A - JADE GREEN - 8 mm	YES	1
104	ANT0424-AA01-0421	A	W1 - P1 - BLUE	PERSPEX S2 7T1F - AZURE BLUE - 8 mm	YES	3
105	ANT0424-AA01-0251	A	W1 - P2 - BLUE	PERSPEX S2 7T1F - AZURE BLUE - 8 mm	YES	3
106	ANT0424-AA01-0419	A	W1 - P3 - BLUE	PERSPEX S2 7T1F - AZURE BLUE - 8 mm	YES	3
107	ANT0424-AA01-0435	A	W2 - P1 - BLUE	PERSPEX S2 7T1F - AZURE BLUE - 8 mm	YES	1
108	ANT0424-AA01-0238	A	W2 - P2 - BLUE	PERSPEX S2 7T1F - AZURE BLUE - 8 mm	YES	5
109	ANT0424-AA01-0240	A	W2 - P3 - BLUE	PERSPEX S2 7T1F - AZURE BLUE - 8 mm	YES	4
110	ANT0424-AA01-0439	A	W3 - P1 - BLUE	PERSPEX S2 7T1F - AZURE BLUE - 8 mm	YES	1

BILL OF MATERIALS

ITEM	PART NUMBER	REV	DESCRIPTION	MATERIAL	CUT	QTY
51	ANT0424-AA01-0323	A	L SECTION - W 3 - 8 L	50 x 30 x 2 RHS - MS S235 (CF)	YES	1
52	ANT0424-AA01-0277	A	L SECTION - W 3 - 8 R	50 x 30 x 2 RHS - MS S235 (CF)	YES	1
53	ANT0424-AA01-0321	A	L SECTION - W 3 - 9 L	50 x 30 x 2 RHS - MS S235 (CF)	YES	1
54	ANT0424-AA01-0275	A	L SECTION - W 3 - 9 R	50 x 30 x 2 RHS - MS S235 (CF)	YES	1
55	ANT0424-AA01-0316	A	L SECTION - W 4 - 1 L	50 x 30 x 2 RHS - MS S235 (CF)	YES	4
56	ANT0424-AA01-0278	A	L SECTION - W 4 - 1 R	50 x 30 x 2 RHS - MS S235 (CF)	YES	4
57	ANT0424-AA01-0317	A	L SECTION - W 4 - 2 L	50 x 30 x 2 RHS - MS S235 (CF)	YES	4
58	ANT0424-AA01-0279	A	L SECTION - W 4 - 2 R	50 x 30 x 2 RHS - MS S235 (CF)	YES	4
59	ANT0424-AA01-0315	A	L SECTION - W 4 - 3 L	50 x 30 x 2 RHS - MS S235 (CF)	YES	4
60	ANT0424-AA01-0280	A	L SECTION - W 4 - 3 R	50 x 30 x 2 RHS - MS S235 (CF)	YES	4
61	ANT0424-AA01-0314	A	L SECTION - W 4 - 4 L	50 x 30 x 2 RHS - MS S235 (CF)	YES	4
62	ANT0424-AA01-0287	A	L SECTION - W 4 - 4 R	50 x 30 x 2 RHS - MS S235 (CF)	YES	4
63	ANT0424-AA01-0313	A	L SECTION - W 4 - 5 L	50 x 30 x 2 RHS - MS S235 (CF)	YES	4
64	ANT0424-AA01-0285	A	L SECTION - W 4 - 5 R	50 x 30 x 2 RHS - MS S235 (CF)	YES	4
65	ANT0424-AA01-0312	A	L SECTION - W 4 - 6 L	50 x 30 x 2 RHS - MS S235 (CF)	YES	4
66	ANT0424-AA01-0286	A	L SECTION - W 4 - 6 R	50 x 30 x 2 RHS - MS S235 (CF)	YES	4
67	ANT0424-AA01-0311	A	L SECTION - W 4 - 7 L	50 x 30 x 2 RHS - MS S235 (CF)	YES	4
68	ANT0424-AA01-0290	A	L SECTION - W 4 - 7 R	50 x 30 x 2 RHS - MS S235 (CF)	YES	4
69	ANT0424-AA01-0310	A	L SECTION - W 4 - 8 L	50 x 30 x 2 RHS - MS S235 (CF)	YES	4
70	ANT0424-AA01-0289	A	L SECTION - W 4 - 8 R	50 x 30 x 2 RHS - MS S235 (CF)	YES	4
71	ANT0424-AA01-0309	A	L SECTION - W 4 - 9 L	50 x 30 x 2 RHS - MS S235 (CF)	YES	4
72	ANT0424-AA01-0288	A	L SECTION - W 4 - 9 R	50 x 30 x 2 RHS - MS S235 (CF)	YES	4
73	ANT0424-AA01-0307	A	L SECTION - W 5 - 1 L	50 x 30 x 2 RHS - MS S235 (CF)	YES	4
74	ANT0424-AA01-0291	A	L SECTION - W 5 - 1 R	50 x 30 x 2 RHS - MS S235 (CF)	YES	4
75	ANT0424-AA01-0458	A	L SECTION - W 5 - 2 L	50 x 30 x 2 RHS - MS S235 (CF)	YES	4
76	ANT0424-AA01-0292	A	L SECTION - W 5 - 2 R	50 x 30 x 2 RHS - MS S235 (CF)	YES	4
77	ANT0424-AA01-0306	A	L SECTION - W 5 - 3 L	50 x 30 x 2 RHS - MS S235 (CF)	YES	4
78	ANT0424-AA01-0293	A	L SECTION - W 5 - 3 R	50 x 30 x 2 RHS - MS S235 (CF)	YES	4
79	ANT0424-AA01-0305	A	L SECTION - W 5 - 4 L	50 x 30 x 2 RHS - MS S235 (CF)	YES	4
80	ANT0424-AA01-0294	A	L SECTION - W 5 - 4 R	50 x 30 x 2 RHS - MS S235 (CF)	YES	4
81	ANT0424-AA01-0304	A	L SECTION - W 5 - 5 L	50 x 30 x 2 RHS - MS S235 (CF)	YES	4
82	ANT0424-AA01-0295	A	L SECTION - W 5 - 5 R	50 x 30 x 2 RHS - MS S235 (CF)	YES	4
83	ANT0424-AA01-0303	A	L SECTION - W 5 - 6 L	50 x 30 x 2 RHS - MS S235 (CF)	YES	4
84	ANT0424-AA01-0296	A	L SECTION - W 5 - 6 R	50 x 30 x 2 RHS - MS S235 (CF)	YES	4
85	ANT0424-AA01-0302	A	L SECTION - W 5 - 7 L	50 x 30 x 2 RHS - MS S235 (CF)	YES	4

BILL OF MATERIALS

ITEM	PART NUMBER	REV	DESCRIPTION	MATERIAL	CUT	QTY
1	ANT0424-AA01-0405	A	L SECTION - W 1 - 1 L	50 x 30 x 2 RHS - MS S235 (CF)	YES	3
2	ANT0424-AA01-0371	A	L SECTION - W 1 - 1 R	50 x 30 x 2 RHS - MS S235 (CF)	YES	3
3	ANT0424-AA01-0406	A	L SECTION - W 1 - 2 L	50 x 30 x 2 RHS - MS S235 (CF)	YES	3
6	ANT0424-AA01-0370	A	L SECTION - W 1 - 3 R	50 x 30 x 2 RHS - MS S235 (CF)	YES	3
5	ANT0424-AA01-0404	A	L SECTION - W 1 - 3 L	50 x 30 x 2 RHS - MS S235 (CF)	YES	3
4	ANT0424-AA01-0372	A	L SECTION - W 1 - 2 R	50 x 30 x 2 RHS - MS S235 (CF)	YES	3
7	ANT0424-AA01-0403	A	L SECTION - W 1 - 4 L	50 x 30 x 2 RHS - MS S235 (CF)	YES	3
8	ANT0424-AA01-0369	A	L SECTION - W 1 - 4 R	50 x 30 x 2 RHS - MS S235 (CF)	YES	3
9	ANT0424-AA01-0402	A	L SECTION - W 1 - 5 L	50 x 30 x 2 RHS - MS S235 (CF)	YES	3
10	ANT0424-AA01-0368	A	L SECTION - W 1 - 5 R	50 x 30 x 2 RHS - MS S235 (CF)	YES	3
11	ANT0424-AA01-0399	A	L SECTION - W 1 - 6 L	50 x 30 x 2 RHS - MS S235 (CF)	YES	3
12	ANT0424-AA01-0373	A	L SECTION - W 1 - 6 R	50 x 30 x 2 RHS - MS S235 (CF)	YES	3
13	ANT0424-AA01-0401	A	L SECTION - W 1 - 7 L	50 x 30 x 2 RHS - MS S235 (CF)	YES	3
14	ANT0424-AA01-0367	A	L SECTION - W 1 - 7 R	50 x 30 x 2 RHS - MS S235 (CF)	YES	3
15	ANT0424-AA01-0433	A	L SECTION - W 1 - 8 L	50 x 30 x 2 RHS - MS S235 (CF)	YES	3
16	ANT0424-AA01-0366	A	L SECTION - W 1 - 8 R	50 x 30 x 2 RHS - MS S235 (CF)	YES	3
17	ANT0424-AA01-0400	A	L SECTION - W 1 - 9 L	50 x 30 x 2 RHS - MS S235 (CF)	YES	3
18	ANT0424-AA01-0364	A	L SECTION - W 1 - 9 R	50 x 30 x 2 RHS - MS S235 (CF)	YES	3
19	ANT0424-AA01-0331	A	L SECTION - W 2 - 1 L	50 x 30 x 2 RHS - MS S235 (CF)	YES	4
20	ANT0424-AA01-0257	A	L SECTION - W 2 - 1 R	50 x 30 x 2 RHS - MS S235 (CF)	YES	4
21	ANT0424-AA01-0334	A	L SECTION - W 2 - 2 L	50 x 30 x 2 RHS - MS S235 (CF)	YES	4
22	ANT0424-AA01-0254	A	L SECTION - W 2 - 2 R	50 x 30 x 2 RHS - MS S235 (CF)	YES	4
23	ANT0424-AA01-0327	A	L SECTION - W 2 - 3 L	50 x 30 x 2 RHS - MS S235 (CF)	YES	4
24	ANT0424-AA01-0268	A	L SECTION - W 2 - 3 R	50 x 30 x 2 RHS - MS S235 (CF)	YES	4
25	ANT0424-AA01-0335	A	L SECTION - W 2 - 4 L	50 x 30 x 2 RHS - MS S235 (CF)	YES	4
26	ANT0424-AA01-0253	A	L SECTION - W 2 - 4 R	50 x 30 x 2 RHS - MS S235 (CF)	YES	4
27	ANT0424-AA01-0329	A	L SECTION - W 2 - 5 L	50 x 30 x 2 RHS - MS S235 (CF)	YES	4
28	ANT0424-AA01-0259	A	L SECTION - W 2 - 5 R	50 x 30 x 2 RHS - MS S235 (CF)	YES	4
29	ANT0424-AA01-0328	A	L SECTION - W 2 - 6 L	50 x 30 x 2 RHS - MS S235 (CF)	YES	4
30	ANT0424-AA01-0260	A	L SECTION - W 2 - 6 R	50 x 30 x 2 RHS - MS S235 (CF)	YES	4
31	ANT0424-AA01-0333	A	L SECTION - W 2 - 7 L	50 x 30 x 2 RHS - MS S235 (CF)	YES	4
32	ANT0424-AA01-0255	A	L SECTION - W 2 - 7 R	50 x 30 x 2 RHS - MS S235 (CF)	YES	4
33	ANT0424-AA01-0332	A	L SECTION - W 2 - 8 L	50 x 30 x 2 RHS - MS S235 (CF)	YES	4
34	ANT0424-AA01-0256	A	L SECTION - W 2 - 8 R	50 x 30 x 2 RHS - MS S235 (CF)	YES	4
35	ANT0424-AA01-0330	A	L SECTION - W 2 - 9 L	50 x 30 x 2 RHS - MS S235 (CF)	YES	4
36	ANT0424-AA01-0258	A	L SECTION - W 2 - 9 R	50 x 30 x 2 RHS - MS S235 (CF)	YES	4
37	ANT0424-AA01-0322	A	L SECTION - W 3 - 1 L	50 x 30 x 2 RHS - MS S235 (CF)	YES	1
38	ANT0424-AA01-0269	A	L SECTION - W 3 - 1 R	50 x 30 x 2 RHS - MS S235 (CF)	YES	1
39	ANT0424-AA01-0325	A	L SECTION - W 3 - 2 L	50 x 30 x 2 RHS - MS S235 (CF)	YES	1
40	ANT0424-AA01-0270	A	L SECTION - W 3 - 2 R	50 x 30 x 2 RHS - MS S235 (CF)	YES	1
41	ANT0424-AA01-0318	A	L SECTION - W 3 - 3 L	50 x 30 x 2 RHS - MS S235 (CF)	YES	1
42	ANT0424-AA01-0271	A	L SECTION - W 3 - 3 R	50 x 30 x 2 RHS - MS S235 (CF)	YES	1
43	ANT0424-AA01-0326	A	L SECTION - W 3 - 4 L	50 x 30 x 2 RHS - MS S235 (CF)	YES	1
44	ANT0424-AA01-0273	A	L SECTION - W 3 - 4 R	50 x 30 x 2 RHS - MS S235 (CF)	YES	1
45	ANT0424-AA01-0320	A	L SECTION - W 3 - 5 L	50 x 30 x 2 RHS - MS S235 (CF)	YES	1
46	ANT0424-AA01-0272	A	L SECTION - W 3 - 5 R	50 x 30 x 2 RHS - MS S235 (CF)	YES	1
47	ANT0424-AA01-0319	A	L SECTION - W 3 - 6 L	50 x 30 x 2 RHS - MS S235 (CF)	YES	1
48	ANT0424-AA01-0274	A	L SECTION - W 3 - 6 R	50 x 30 x 2 RHS - MS S235 (CF)	YES	1
49	ANT0424-AA01-0324	A	L SECTION - W 3 - 7 L	50 x 30 x 2 RHS - MS S235 (CF)	YES	1
50	ANT0424-AA01-0276	A	L SECTION - W 3 - 7 R	50 x 30 x 2 RHS - MS S235 (CF)	YES	1

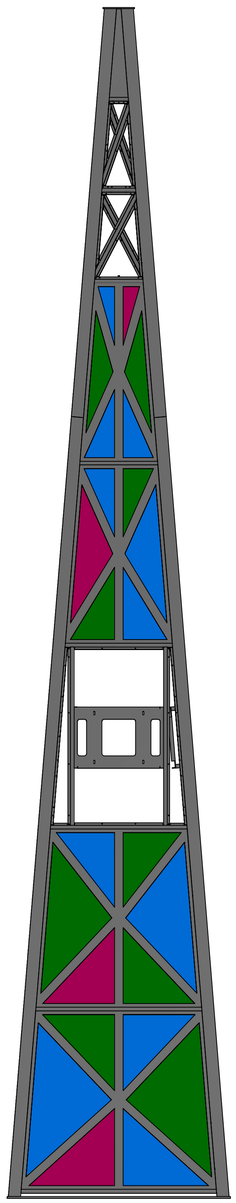

LEFT

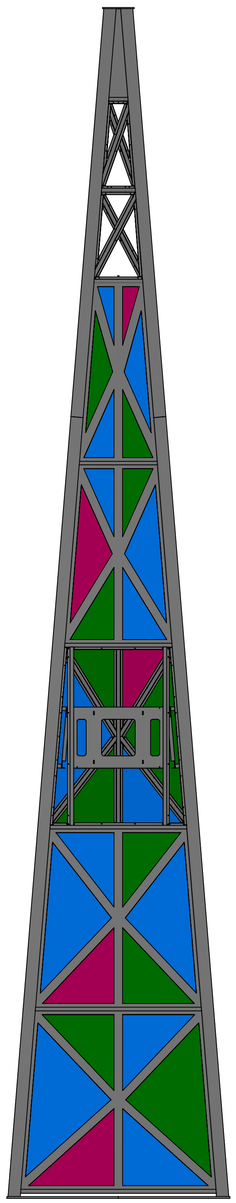

FRONT

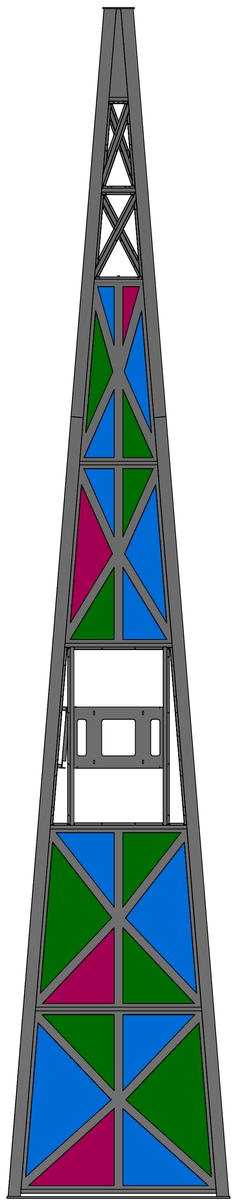

RIGHT

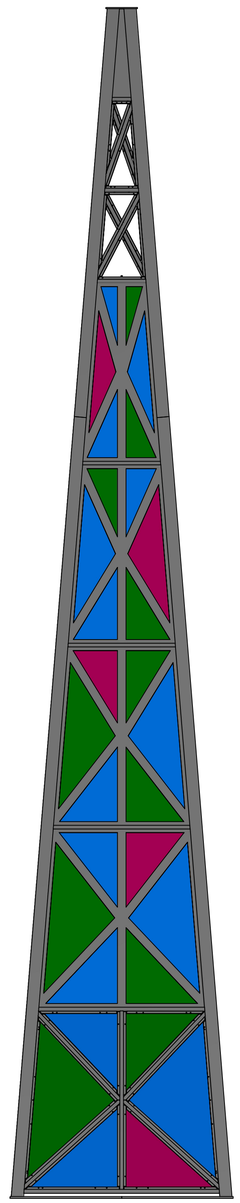

BACK

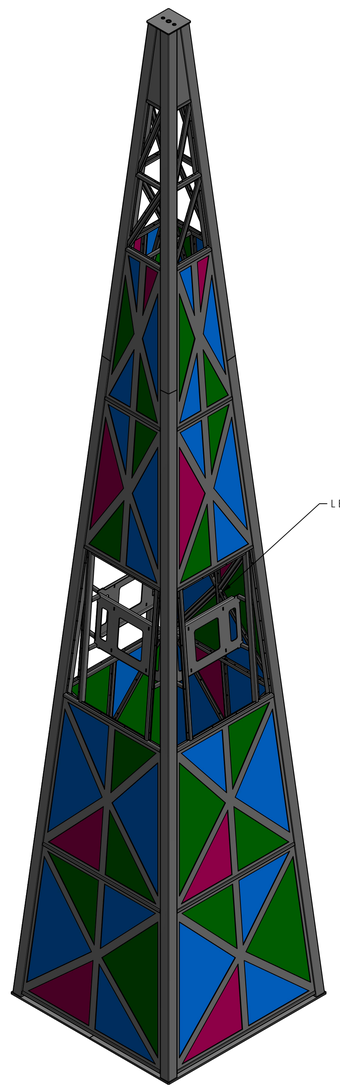

L BRACKETS TO BE SENT TO BE SHOT BLASTED AND PAINTED

ISOMETRIC

ITEM LIST

BUILD No.	PART NUMBER	DESCRIPTION	QTY
1 - 2	ANT0424-AA01-0001	ANTENNA STEEL FRAME	1

GENERAL NOTES

DO NOT ETCH

1. IF IN DOUBT - ASK!
2. ALL DIMENSIONS ARE IN mm UNLESS STATED OTHERWISE.
3. ALL LINEAR DIMENSIONS TO BE ± 1mm UNLESS STATED OTHERWISE.
4. ALL HOLE DIMENSIONS TO BE ± 0.25mm UNLESS STATED OTHERWISE.
5. PAINTING PROCESS HAS BEEN SUBCONTRACTED

CONTENTS

SHEET 1: BOM

SHEET 2: L BRACKETS

SHEET 3: PERSPEX

FINISHES

- PERSPERX: NO FINISH
- L BRACKETS: SHOT BLASTED & PAINTED PSX 700 RAL 9003 (SIGNAL WHITE)

CONSTRUCTOR

BUILD PROCESS 1:	LASER PLATE	BUILD PROCESS 2:	LASER TUBE	BUILD No:	6 - 7
BUILD PROCESS 3:	WOODWORK	BUILD PROCESS 4:	SUB-CONTRACT		
BUILD PROCESS 5:		BUILD PROCESS 6:			
BUILD PROCESS 7:		BUILD PROCESS 8:		BUILD QTY:	2
MATERIAL:	PERSPEX & RHS	WEIGHT:	1477 kg		
FINISH:	PAINTED - SEE DRAWING NOTES	FINISH QUALITY:	HIGH		

REVISION HISTORY

REV	DESCRIPTION	DRN	DATE
A,1	ISSUED FOR MANUFACTURING	ON	27/02/2024

T | +44 (0)1423 358 001
E | sales@stageone.co.uk
W | www.stageone.co.uk

THIS DRAWING IS THE COPYRIGHT OF STAGE ONE CREATIVE SERVICES LTD AND SHALL NOT BE DISCLOSED OR COPIED WITHOUT WRITTEN CONSENT

CLIENT: NEWSUBSTANCE LTD	PROJECT: CO-OP LIVE ANTENNA
GROUP: AA - MANUFACTURED ITEMS	
SUBGROUP: 01 - LIGHT ANTENNA	
DRAWING TYPE: MF	DRAWN BY: ON
PROJECTION:	DRAWING SIZE: A1
DRAWING SCALE: 1 : 25	
DRAWING TITLE: ANTENNA	SHEET No. 1 / 3
DRAWING NUMBER: ANT0424-AA01-0003	REVISION A,1

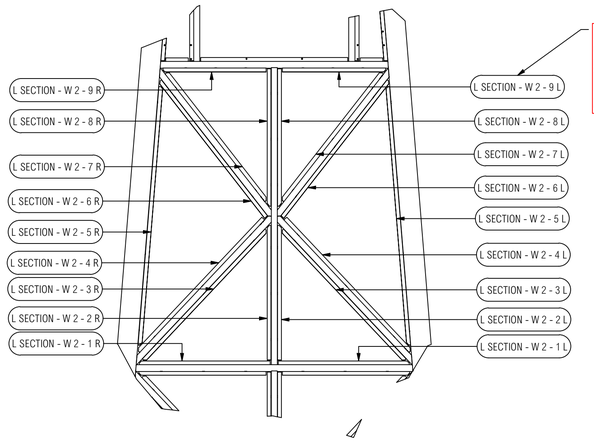

ALL BRACKETS WILL BE ETCHED WITH THE LOCATION OF WHERE THE BRACKET BELONGS, W REFERS TO THE WINDOW SECTION, EACH WILL HAVE A NUMBER SHOWING THE POSITION FLOWING THE NUMBERING SCHEME SHOWN IN DETAIL A.

PLEASE NOTE THAT THE THEY ARE FITTED FROM THE INSIDE SO LEFT AND RIGHT WILL BE INVERTED WHEN LOOKING FROM THE OUTSIDE.

DETAIL A
SCALE 1 : 15
COVER PLATES HIDDEN

BILL OF MATERIALS

ITEM	PART NUMBER	REV	DESCRIPTION	MATERIAL	CUT	QTY
79	ANT0424-AA01-0305	A	L SECTION - W 5 - 4 L	50 x 30 x 2 RHS - MS S235 (CF)	YES	4
80	ANT0424-AA01-0294	A	L SECTION - W 5 - 4 R	50 x 30 x 2 RHS - MS S235 (CF)	YES	4
81	ANT0424-AA01-0304	A	L SECTION - W 5 - 5 L	50 x 30 x 2 RHS - MS S235 (CF)	YES	4
82	ANT0424-AA01-0295	A	L SECTION - W 5 - 5 R	50 x 30 x 2 RHS - MS S235 (CF)	YES	4
83	ANT0424-AA01-0303	A	L SECTION - W 5 - 6 L	50 x 30 x 2 RHS - MS S235 (CF)	YES	4
84	ANT0424-AA01-0296	A	L SECTION - W 5 - 6 R	50 x 30 x 2 RHS - MS S235 (CF)	YES	4
85	ANT0424-AA01-0302	A	L SECTION - W 5 - 7 L	50 x 30 x 2 RHS - MS S235 (CF)	YES	4
86	ANT0424-AA01-0297	A	L SECTION - W 5 - 7 R	50 x 30 x 2 RHS - MS S235 (CF)	YES	4
87	ANT0424-AA01-0301	A	L SECTION - W 5 - 8 L	50 x 30 x 2 RHS - MS S235 (CF)	YES	4
88	ANT0424-AA01-0298	A	L SECTION - W 5 - 8 R	50 x 30 x 2 RHS - MS S235 (CF)	YES	4
89	ANT0424-AA01-0300	A	L SECTION - W 5 - 9 L	50 x 30 x 2 RHS - MS S235 (CF)	YES	4
90	ANT0424-AA01-0299	A	L SECTION - W 5 - 9 R	50 x 30 x 2 RHS - MS S235 (CF)	YES	4
125	M5 x 16 SKT CAP SCREW		M5 x 16 SKT CAP SCREW	AS SUPPLIED	NO	940

BILL OF MATERIALS

ITEM	PART NUMBER	REV	DESCRIPTION	MATERIAL	CUT	QTY
53	ANT0424-AA01-0321	A	L SECTION - W 3 - 9 L	50 x 30 x 2 RHS - MS S235 (CF)	YES	1
54	ANT0424-AA01-0275	A	L SECTION - W 3 - 9 R	50 x 30 x 2 RHS - MS S235 (CF)	YES	1
55	ANT0424-AA01-0316	A	L SECTION - W 4 - 1 L	50 x 30 x 2 RHS - MS S235 (CF)	YES	4
56	ANT0424-AA01-0278	A	L SECTION - W 4 - 1 R	50 x 30 x 2 RHS - MS S235 (CF)	YES	4
57	ANT0424-AA01-0317	A	L SECTION - W 4 - 2 L	50 x 30 x 2 RHS - MS S235 (CF)	YES	4
58	ANT0424-AA01-0279	A	L SECTION - W 4 - 2 R	50 x 30 x 2 RHS - MS S235 (CF)	YES	4
59	ANT0424-AA01-0315	A	L SECTION - W 4 - 3 L	50 x 30 x 2 RHS - MS S235 (CF)	YES	4
60	ANT0424-AA01-0280	A	L SECTION - W 4 - 3 R	50 x 30 x 2 RHS - MS S235 (CF)	YES	4
61	ANT0424-AA01-0314	A	L SECTION - W 4 - 4 L	50 x 30 x 2 RHS - MS S235 (CF)	YES	4
62	ANT0424-AA01-0287	A	L SECTION - W 4 - 4 R	50 x 30 x 2 RHS - MS S235 (CF)	YES	4
63	ANT0424-AA01-0313	A	L SECTION - W 4 - 5 L	50 x 30 x 2 RHS - MS S235 (CF)	YES	4
64	ANT0424-AA01-0285	A	L SECTION - W 4 - 5 R	50 x 30 x 2 RHS - MS S235 (CF)	YES	4
65	ANT0424-AA01-0312	A	L SECTION - W 4 - 6 L	50 x 30 x 2 RHS - MS S235 (CF)	YES	4
66	ANT0424-AA01-0286	A	L SECTION - W 4 - 6 R	50 x 30 x 2 RHS - MS S235 (CF)	YES	4
67	ANT0424-AA01-0311	A	L SECTION - W 4 - 7 L	50 x 30 x 2 RHS - MS S235 (CF)	YES	4
68	ANT0424-AA01-0290	A	L SECTION - W 4 - 7 R	50 x 30 x 2 RHS - MS S235 (CF)	YES	4
69	ANT0424-AA01-0310	A	L SECTION - W 4 - 8 L	50 x 30 x 2 RHS - MS S235 (CF)	YES	4
70	ANT0424-AA01-0289	A	L SECTION - W 4 - 8 R	50 x 30 x 2 RHS - MS S235 (CF)	YES	4
71	ANT0424-AA01-0309	A	L SECTION - W 4 - 9 L	50 x 30 x 2 RHS - MS S235 (CF)	YES	4
72	ANT0424-AA01-0288	A	L SECTION - W 4 - 9 R	50 x 30 x 2 RHS - MS S235 (CF)	YES	4
73	ANT0424-AA01-0307	A	L SECTION - W 5 - 1 L	50 x 30 x 2 RHS - MS S235 (CF)	YES	4
74	ANT0424-AA01-0291	A	L SECTION - W 5 - 1 R	50 x 30 x 2 RHS - MS S235 (CF)	YES	4
75	ANT0424-AA01-0458	A	L SECTION - W 5 - 2 L	50 x 30 x 2 RHS - MS S235 (CF)	YES	4
76	ANT0424-AA01-0292	A	L SECTION - W 5 - 2 R	50 x 30 x 2 RHS - MS S235 (CF)	YES	4
77	ANT0424-AA01-0306	A	L SECTION - W 5 - 3 L	50 x 30 x 2 RHS - MS S235 (CF)	YES	4
78	ANT0424-AA01-0293	A	L SECTION - W 5 - 3 R	50 x 30 x 2 RHS - MS S235 (CF)	YES	4

BILL OF MATERIALS

ITEM	PART NUMBER	REV	DESCRIPTION	MATERIAL	CUT	QTY
1	ANT0424-AA01-0405	A	L SECTION - W 1 - 1 L	50 x 30 x 2 RHS - MS S235 (CF)	YES	3
2	ANT0424-AA01-0371	A	L SECTION - W 1 - 1 R	50 x 30 x 2 RHS - MS S235 (CF)	YES	3
3	ANT0424-AA01-0406	A	L SECTION - W 1 - 2 L	50 x 30 x 2 RHS - MS S235 (CF)	YES	3
4	ANT0424-AA01-0372	A	L SECTION - W 1 - 2 R	50 x 30 x 2 RHS - MS S235 (CF)	YES	3
5	ANT0424-AA01-0404	A	L SECTION - W 1 - 3 L	50 x 30 x 2 RHS - MS S235 (CF)	YES	3
6	ANT0424-AA01-0370	A	L SECTION - W 1 - 3 R	50 x 30 x 2 RHS - MS S235 (CF)	YES	3
7	ANT0424-AA01-0403	A	L SECTION - W 1 - 4 L	50 x 30 x 2 RHS - MS S235 (CF)	YES	3
8	ANT0424-AA01-0369	A	L SECTION - W 1 - 4 R	50 x 30 x 2 RHS - MS S235 (CF)	YES	3
9	ANT0424-AA01-0402	A	L SECTION - W 1 - 5 L	50 x 30 x 2 RHS - MS S235 (CF)	YES	3
10	ANT0424-AA01-0368	A	L SECTION - W 1 - 5 R	50 x 30 x 2 RHS - MS S235 (CF)	YES	3
11	ANT0424-AA01-0399	A	L SECTION - W 1 - 6 L	50 x 30 x 2 RHS - MS S235 (CF)	YES	3
12	ANT0424-AA01-0373	A	L SECTION - W 1 - 6 R	50 x 30 x 2 RHS - MS S235 (CF)	YES	3
13	ANT0424-AA01-0401	A	L SECTION - W 1 - 7 L	50 x 30 x 2 RHS - MS S235 (CF)	YES	3
14	ANT0424-AA01-0367	A	L SECTION - W 1 - 7 R	50 x 30 x 2 RHS - MS S235 (CF)	YES	3
15	ANT0424-AA01-0433	A	L SECTION - W 1 - 8 L	50 x 30 x 2 RHS - MS S235 (CF)	YES	3
16	ANT0424-AA01-0366	A	L SECTION - W 1 - 8 R	50 x 30 x 2 RHS - MS S235 (CF)	YES	3
17	ANT0424-AA01-0400	A	L SECTION - W 1 - 9 L	50 x 30 x 2 RHS - MS S235 (CF)	YES	3
18	ANT0424-AA01-0364	A	L SECTION - W 1 - 9 R	50 x 30 x 2 RHS - MS S235 (CF)	YES	3
19	ANT0424-AA01-0331	A	L SECTION - W 2 - 1 L	50 x 30 x 2 RHS - MS S235 (CF)	YES	4
20	ANT0424-AA01-0257	A	L SECTION - W 2 - 1 R	50 x 30 x 2 RHS - MS S235 (CF)	YES	4
21	ANT0424-AA01-0334	A	L SECTION - W 2 - 2 L	50 x 30 x 2 RHS - MS S235 (CF)	YES	4
22	ANT0424-AA01-0254	A	L SECTION - W 2 - 2 R	50 x 30 x 2 RHS - MS S235 (CF)	YES	4
23	ANT0424-AA01-0327	A	L SECTION - W 2 - 3 L	50 x 30 x 2 RHS - MS S235 (CF)	YES	4
24	ANT0424-AA01-0268	A	L SECTION - W 2 - 3 R	50 x 30 x 2 RHS - MS S235 (CF)	YES	4
25	ANT0424-AA01-0335	A	L SECTION - W 2 - 4 L	50 x 30 x 2 RHS - MS S235 (CF)	YES	4
26	ANT0424-AA01-0253	A	L SECTION - W 2 - 4 R	50 x 30 x 2 RHS - MS S235 (CF)	YES	4
27	ANT0424-AA01-0329	A	L SECTION - W 2 - 5 L	50 x 30 x 2 RHS - MS S235 (CF)	YES	4
28	ANT0424-AA01-0259	A	L SECTION - W 2 - 5 R	50 x 30 x 2 RHS - MS S235 (CF)	YES	4
29	ANT0424-AA01-0328	A	L SECTION - W 2 - 6 L	50 x 30 x 2 RHS - MS S235 (CF)	YES	4
30	ANT0424-AA01-0260	A	L SECTION - W 2 - 6 R	50 x 30 x 2 RHS - MS S235 (CF)	YES	4
31	ANT0424-AA01-0333	A	L SECTION - W 2 - 7 L	50 x 30 x 2 RHS - MS S235 (CF)	YES	4
32	ANT0424-AA01-0255	A	L SECTION - W 2 - 7 R	50 x 30 x 2 RHS - MS S235 (CF)	YES	4
33	ANT0424-AA01-0332	A	L SECTION - W 2 - 8 L	50 x 30 x 2 RHS - MS S235 (CF)	YES	4
34	ANT0424-AA01-0256	A	L SECTION - W 2 - 8 R	50 x 30 x 2 RHS - MS S235 (CF)	YES	4
35	ANT0424-AA01-0330	A	L SECTION - W 2 - 9 L	50 x 30 x 2 RHS - MS S235 (CF)	YES	4
36	ANT0424-AA01-0258	A	L SECTION - W 2 - 9 R	50 x 30 x 2 RHS - MS S235 (CF)	YES	4
37	ANT0424-AA01-0322	A	L SECTION - W 3 - 1 L	50 x 30 x 2 RHS - MS S235 (CF)	YES	1
38	ANT0424-AA01-0269	A	L SECTION - W 3 - 1 R	50 x 30 x 2 RHS - MS S235 (CF)	YES	1
39	ANT0424-AA01-0325	A	L SECTION - W 3 - 2 L	50 x 30 x 2 RHS - MS S235 (CF)	YES	1
40	ANT0424-AA01-0270	A	L SECTION - W 3 - 2 R	50 x 30 x 2 RHS - MS S235 (CF)	YES	1
41	ANT0424-AA01-0318	A	L SECTION - W 3 - 3 L	50 x 30 x 2 RHS - MS S235 (CF)	YES	1
42	ANT0424-AA01-0271	A	L SECTION - W 3 - 3 R	50 x 30 x 2 RHS - MS S235 (CF)	YES	1
43	ANT0424-AA01-0326	A	L SECTION - W 3 - 4 L	50 x 30 x 2 RHS - MS S235 (CF)	YES	1
44	ANT0424-AA01-0273	A	L SECTION - W 3 - 4 R	50 x 30 x 2 RHS - MS S235 (CF)	YES	1
45	ANT0424-AA01-0320	A	L SECTION - W 3 - 5 L	50 x 30 x 2 RHS - MS S235 (CF)	YES	1
46	ANT0424-AA01-0272	A	L SECTION - W 3 - 5 R	50 x 30 x 2 RHS - MS S235 (CF)	YES	1
47	ANT0424-AA01-0319	A	L SECTION - W 3 - 6 L	50 x 30 x 2 RHS - MS S235 (CF)	YES	1
48	ANT0424-AA01-0274	A	L SECTION - W 3 - 6 R	50 x 30 x 2 RHS - MS S235 (CF)	YES	1
49	ANT0424-AA01-0324	A	L SECTION - W 3 - 7 L	50 x 30 x 2 RHS - MS S235 (CF)	YES	1
50	ANT0424-AA01-0276	A	L SECTION - W 3 - 7 R	50 x 30 x 2 RHS - MS S235 (CF)	YES	1
51	ANT0424-AA01-0323	A	L SECTION - W 3 - 8 L	50 x 30 x 2 RHS - MS S235 (CF)	YES	1
52	ANT0424-AA01-0277	A	L SECTION - W 3 - 8 R	50 x 30 x 2 RHS - MS S235 (CF)	YES	1

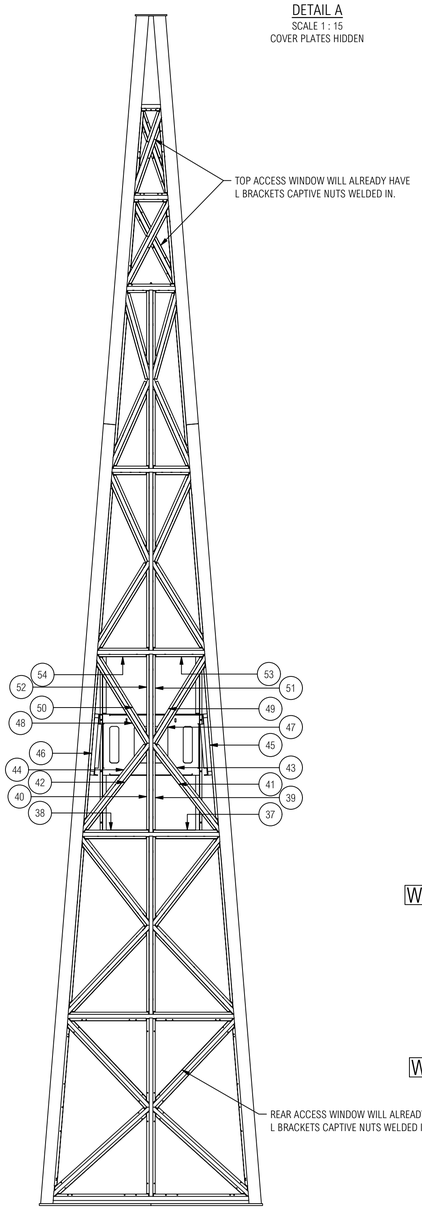

BACK
COVER PLATES HIDDEN

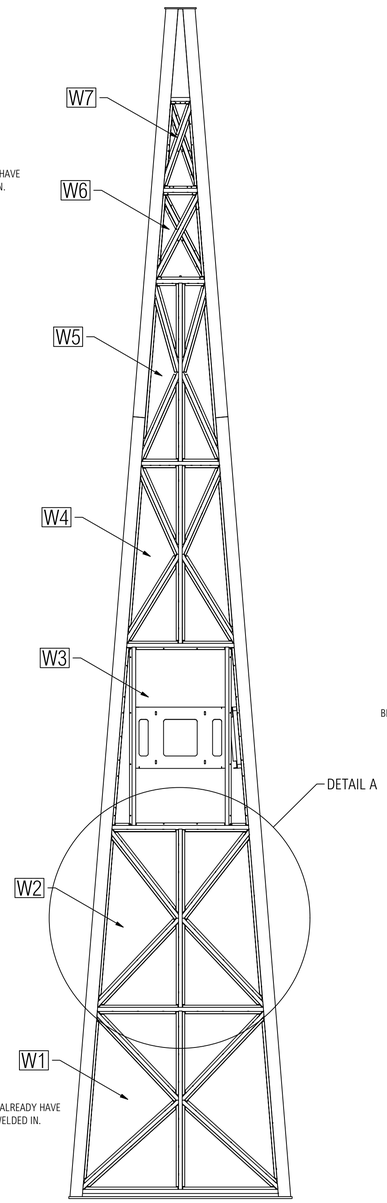

SIDE
COVER PLATES HIDDEN

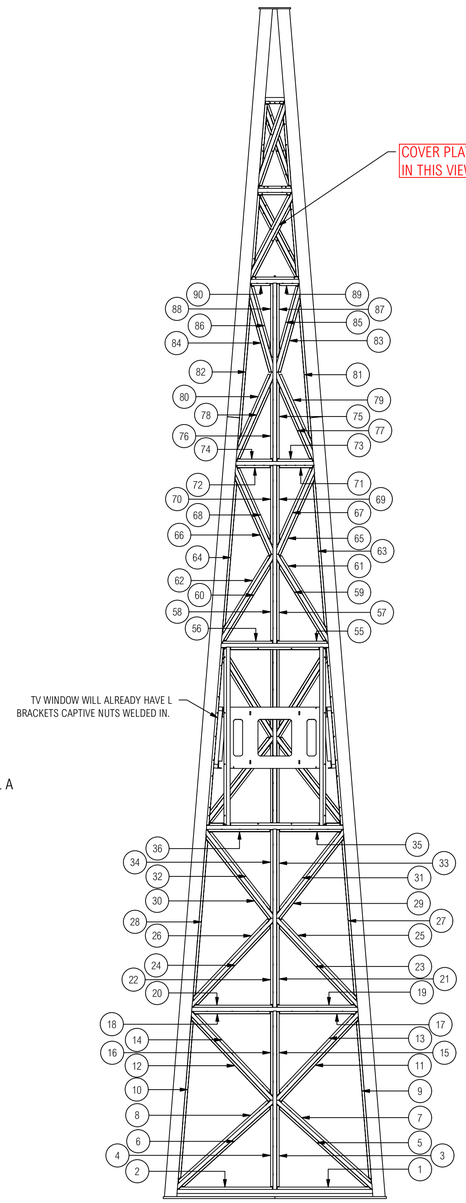

FRONT
COVER PLATES HIDDEN

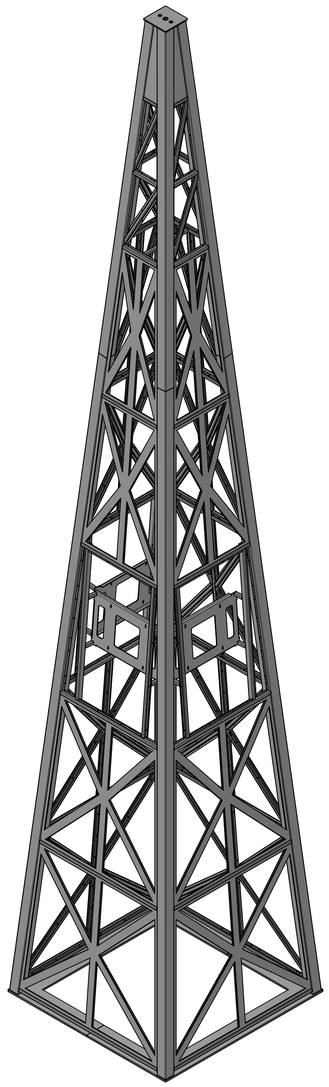

ISOMETRIC
COVER PLATES SHOWN

GENERAL NOTES

DO NOT ETCH

1. IF IN DOUBT - ASK!
2. ALL DIMENSIONS ARE IN mm UNLESS STATED OTHERWISE.
3. ALL LINEAR DIMENSIONS TO BE ± 1mm UNLESS STATED OTHERWISE.
4. ALL HOLE DIMENSIONS TO BE ± 0.25mm UNLESS STATED OTHERWISE.
5. PAINTING PROCESS HAS BEEN SUBCONTRACTED

CONTENTS

SHEET 1: BOM

SHEET 2: L BRACKETS

SHEET 3: PERSPEX

FINISHES

- PERSPERX: NO FINISH
- L BRACKETS: SHOT BLASTED & PAINTED PSX 700 RAL 9003 (SIGNAL WHITE)

CONSTRUCTOR

BUILD PROCESS 1:	LASER PLATE	BUILD PROCESS 2:	LASER TUBE	BUILD No:	6 - 7
BUILD PROCESS 3:	WOODWORK	BUILD PROCESS 4:	SUB-CONTRACT		
BUILD PROCESS 5:		BUILD PROCESS 6:			
BUILD PROCESS 7:		BUILD PROCESS 8:		BUILD QTY:	2
MATERIAL:	PERSPEX & RHS	WEIGHT:	1477 kg		
FINISH:	PAINTED - SEE DRAWING NOTES	FINISH QUALITY:	HIGH		

REVISION HISTORY

REV	DESCRIPTION	DRN	DATE
A,1	ISSUED FOR MANUFACTURING	ON	27/02/2024

T | +44 (0)1423 358 001
E | sales@stageone.co.uk
W | www.stageone.co.uk

THIS DRAWING IS THE COPYRIGHT OF STAGE ONE CREATIVE SERVICES LTD AND SHALL NOT BE DISCLOSED OR COPIED WITHOUT WRITTEN CONSENT

CLIENT: NEWSUBSTANCE LTD	PROJECT: CO-OP LIVE ANTENNA
GROUP: AA - MANUFACTURED ITEMS	
SUBGROUP: 01 - LIGHT ANTENNA	
DRAWING TYPE: MF	DRAWN BY: ON
PROJECTION:	DRAWING SIZE: A1
DRAWING SCALE: 1 : 25	
DRAWING TITLE: ANTENNA	SHEET No. 2 / 3
DRAWING NUMBER: ANT0424-AA01-0003	REVISION A,1

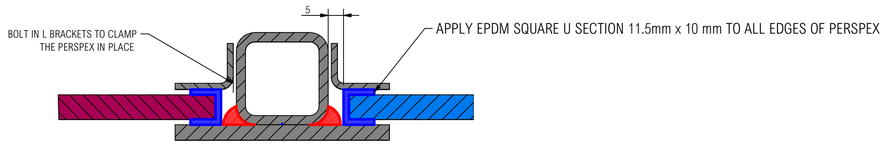

SECTION C - C

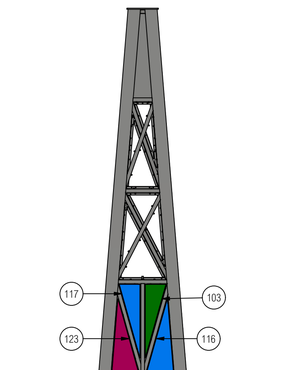

BACK
COVER PLATES HIDDEN

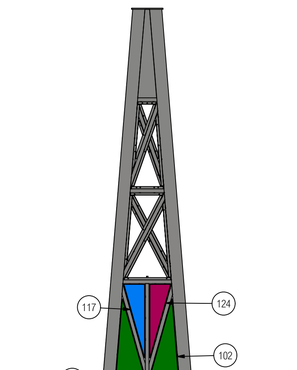

LEFT
COVER PLATES HIDDEN

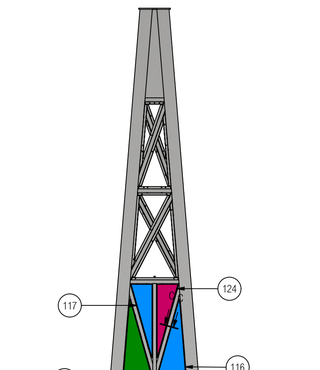

FRONT
COVER PLATES HIDDEN

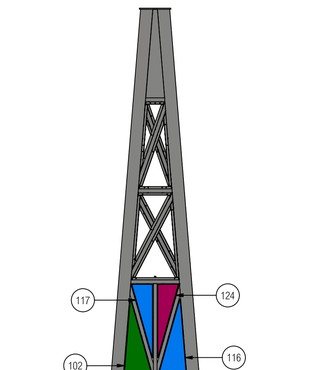

RIGHT
COVER PLATES HIDDEN

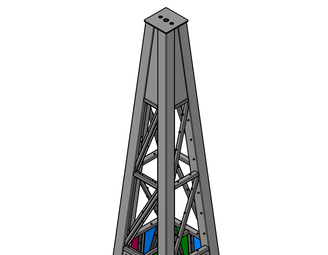

ISOMETRIC
COVER PLATES SHOWN

BILL OF MATERIALS

ITEM	PART NUMBER	REV	DESCRIPTION	MATERIAL	CUT	QTY
91	ANT0424-AA01-0420	A	W1 - P2 - GREEN	PERSPEX S2 6T7A - JADE GREEN - 8 mm	YES	3
92	ANT0424-AA01-0250	A	W1 - P3 - GREEN	PERSPEX S2 6T7A - JADE GREEN - 8 mm	YES	3
93	ANT0424-AA01-0422	A	W2 - P1 - GREEN	PERSPEX S2 6T7A - JADE GREEN - 8 mm	YES	4
94	ANT0424-AA01-0430	A	W2 - P2 - GREEN	PERSPEX S2 6T7A - JADE GREEN - 8 mm	YES	3
95	ANT0424-AA01-0423	A	W2 - P3 - GREEN	PERSPEX S2 6T7A - JADE GREEN - 8 mm	YES	3
96	ANT0424-AA01-0241	A	W3 - P1 - GREEN	PERSPEX S2 6T7A - JADE GREEN - 8 mm	YES	1
97	ANT0424-AA01-0437	A	W3 - P2 - GREEN	PERSPEX S2 6T7A - JADE GREEN - 8 mm	YES	1
98	ANT0424-AA01-0243	A	W3 - P3 - GREEN	PERSPEX S2 6T7A - JADE GREEN - 8 mm	YES	1
99	ANT0424-AA01-0245	A	W4 - P1 - GREEN	PERSPEX S2 6T7A - JADE GREEN - 8 mm	YES	4
100	ANT0424-AA01-0426	A	W4 - P3 - GREEN	PERSPEX S2 6T7A - JADE GREEN - 8 mm	YES	4
101	ANT0424-AA01-0427	A	W5 - P1 - GREEN	PERSPEX S2 6T7A - JADE GREEN - 8 mm	YES	3
102	ANT0424-AA01-0248	A	W5 - P2 - GREEN	PERSPEX S2 6T7A - JADE GREEN - 8 mm	YES	4
103	ANT0424-AA01-0441	A	W5 - P3 - GREEN	PERSPEX S2 6T7A - JADE GREEN - 8 mm	YES	1
104	ANT0424-AA01-0421	A	W1 - P1 - BLUE	PERSPEX S2 7T1F - AZURE BLUE - 8 mm	YES	3
105	ANT0424-AA01-0251	A	W1 - P2 - BLUE	PERSPEX S2 7T1F - AZURE BLUE - 8 mm	YES	3
106	ANT0424-AA01-0419	A	W1 - P3 - BLUE	PERSPEX S2 7T1F - AZURE BLUE - 8 mm	YES	3
107	ANT0424-AA01-0435	A	W2 - P1 - BLUE	PERSPEX S2 7T1F - AZURE BLUE - 8 mm	YES	1
108	ANT0424-AA01-0238	A	W2 - P2 - BLUE	PERSPEX S2 7T1F - AZURE BLUE - 8 mm	YES	5
109	ANT0424-AA01-0240	A	W2 - P3 - BLUE	PERSPEX S2 7T1F - AZURE BLUE - 8 mm	YES	4
110	ANT0424-AA01-0439	A	W3 - P1 - BLUE	PERSPEX S2 7T1F - AZURE BLUE - 8 mm	YES	1
111	ANT0424-AA01-0242	A	W3 - P2 - BLUE	PERSPEX S2 7T1F - AZURE BLUE - 8 mm	YES	1
112	ANT0424-AA01-0424	A	W4 - P1 - BLUE	PERSPEX S2 7T1F - AZURE BLUE - 8 mm	YES	4
113	ANT0424-AA01-0425	A	W4 - P2 - BLUE	PERSPEX S2 7T1F - AZURE BLUE - 8 mm	YES	4
114	ANT0424-AA01-0246	A	W4 - P3 - BLUE	PERSPEX S2 7T1F - AZURE BLUE - 8 mm	YES	4
115	ANT0424-AA01-0247	A	W5 - P1 - BLUE	PERSPEX S2 7T1F - AZURE BLUE - 8 mm	YES	5
116	ANT0424-AA01-0428	A	W5 - P2 - BLUE	PERSPEX S2 7T1F - AZURE BLUE - 8 mm	YES	3
117	ANT0424-AA01-0249	A	W5 - P3 - BLUE	PERSPEX S2 7T1F - AZURE BLUE - 8 mm	YES	4
118	ANT0424-AA01-0252	A	W1 - P1 - PINK	PERSPEX S2 8T14 - VIOLET HEATHER - 8 mm	YES	3
119	ANT0424-AA01-0239	A	W2 - P1 - PINK	PERSPEX S2 8T14 - VIOLET HEATHER - 8 mm	YES	3
120	ANT0424-AA01-0436	A	W2 - P3 - PINK	PERSPEX S2 8T14 - VIOLET HEATHER - 8 mm	YES	1
121	ANT0424-AA01-0438	A	W3 - P3 - PINK	PERSPEX S2 8T14 - VIOLET HEATHER - 8 mm	YES	1
122	ANT0424-AA01-0244	A	W4 - P2 - PINK	PERSPEX S2 8T14 - VIOLET HEATHER - 8 mm	YES	4
123	ANT0424-AA01-0440	A	W5 - P2 - PINK	PERSPEX S2 8T14 - VIOLET HEATHER - 8 mm	YES	1
124	ANT0424-AA01-0429	A	W5 - P3 - PINK	PERSPEX S2 8T14 - VIOLET HEATHER - 8 mm	YES	3
125	M5 x 16 SKT CAP SCREW		M5 x 16 SKT CAP SCREW	AS SUPPLIED	NO	940

GENERAL NOTES

1. IF IN DOUBT - ASK!
2. ALL DIMENSIONS ARE IN mm UNLESS STATED OTHERWISE.
3. ALL LINEAR DIMENSIONS TO BE ± 1mm UNLESS STATED OTHERWISE.
4. ALL HOLE DIMENSIONS TO BE ± 0.25mm UNLESS STATED OTHERWISE.
5. PAINTING PROCESS HAS BEEN SUBCONTRACTED

CONTENTS

SHEET 1: BOM

SHEET 2: L BRACKETS

SHEET 3: PERSPEX

FINISHES

- PERSPERX: NO FINISH
- L BRACKETS: SHOT BLASTED & PAINTED PSX 700 RAL 9003 (SIGNAL WHITE)

CONSTRUCTOR

BUILD PROCESS 1:	LASER PLATE	BUILD PROCESS 2:	LASER TUBE	BUILD No:	6 - 7
BUILD PROCESS 3:	WOODWORK	BUILD PROCESS 4:	SUB-CONTRACT		
BUILD PROCESS 5:		BUILD PROCESS 6:			
BUILD PROCESS 7:		BUILD PROCESS 8:		BUILD QTY:	2
MATERIAL:	PERSPEX & RHS	WEIGHT:	1477 kg		
FINISH:	PAINTED - SEE DRAWING NOTES	FINISH QUALITY:	HIGH		

REVISION HISTORY

REV	DESCRIPTION	DRN	DATE
A,1	ISSUED FOR MANUFACTURING	ON	27/02/2024

T | +44 (0)1423 358 001
E | sales@stageone.co.uk
W | www.stageone.co.uk

THIS DRAWING IS THE COPYRIGHT OF STAGE ONE CREATIVE SERVICES LTD AND SHALL NOT BE DISCLOSED OR COPIED WITHOUT WRITTEN CONSENT

CLIENT: NEWSUBSTANCE LTD	PROJECT: CO-OP LIVE ANTENNA
GROUP: AA - MANUFACTURED ITEMS	
SUBGROUP: 01 - LIGHT ANTENNA	

DRAWING TYPE	DRAWN BY	PROJECTION	DRAWING SIZE	DRAWING SCALE
MF	ON		A1	1 : 25

DRAWING TITLE: ANTENNA	SHEET No. 3 / 3
DRAWING NUMBER: ANT0424-AA01-0003	REVISION A,1

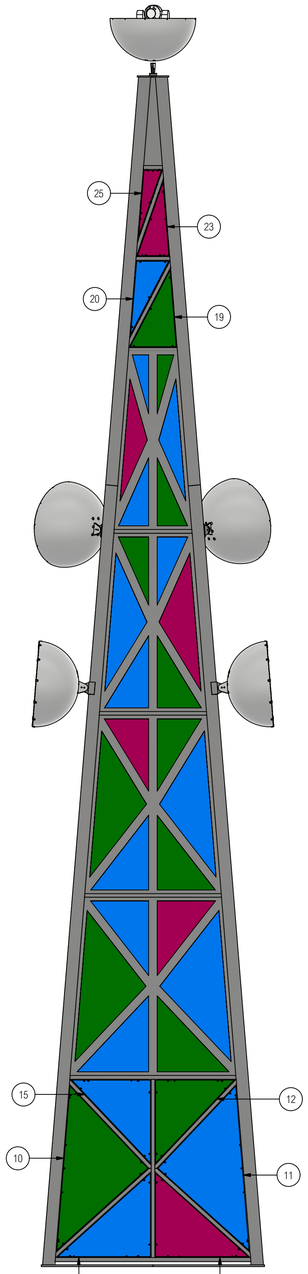

BACK
ACCESS COVER PLATES HIDDEN TO SHOW PERSPEX

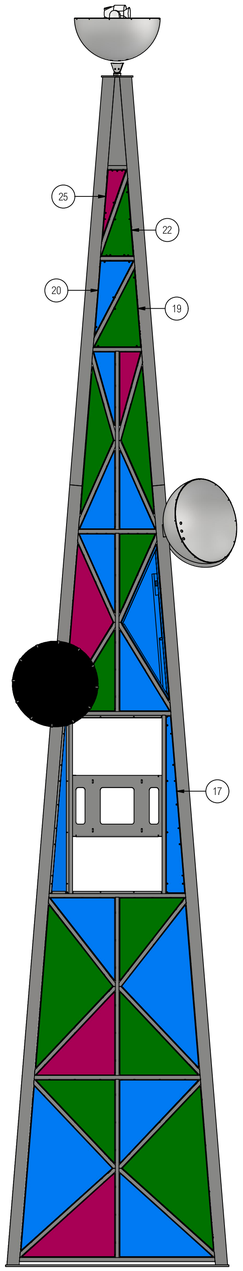

LEFT
ACCESS COVER PLATES HIDDEN TO SHOW PERSPEX

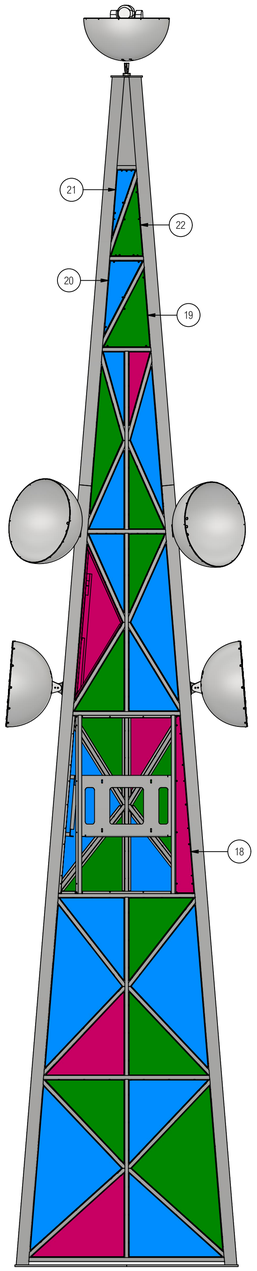

FRONT
ACCESS COVER PLATES HIDDEN TO SHOW PERSPEX

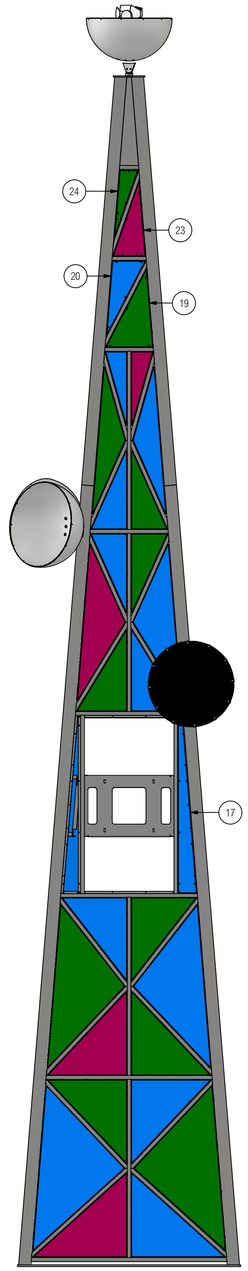

RIGHT
ACCESS COVER PLATES HIDDEN TO SHOW PERSPEX

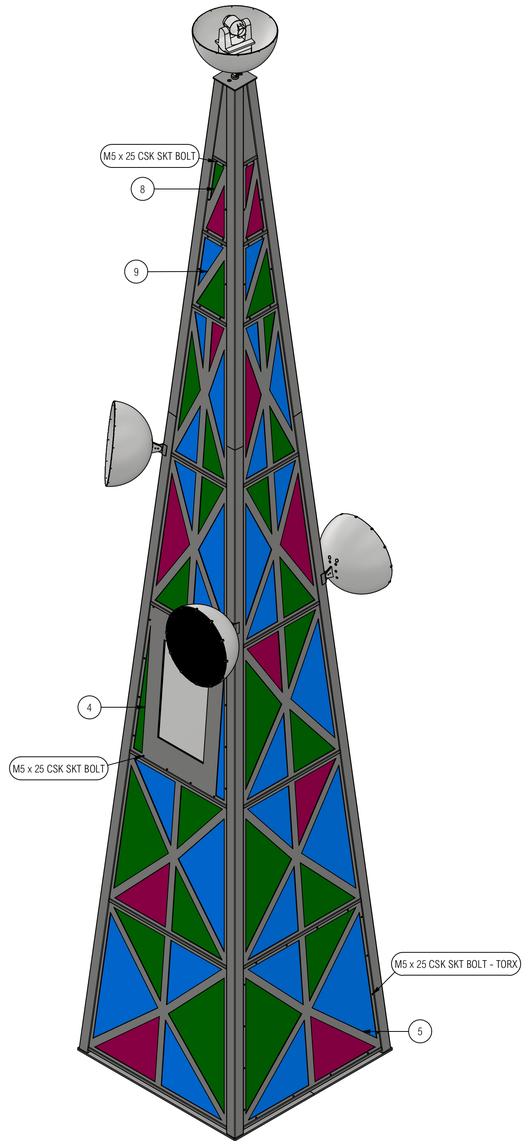

ISOMETRIC

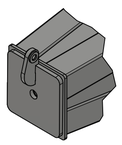

DETAIL M
SCALE 1 : 10

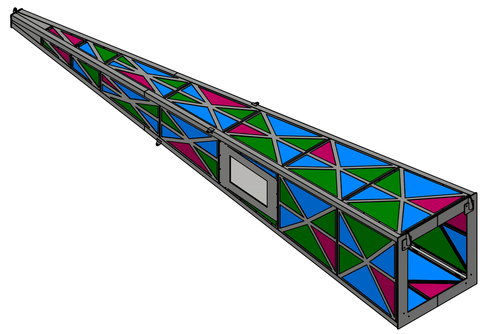

ISOMETRIC

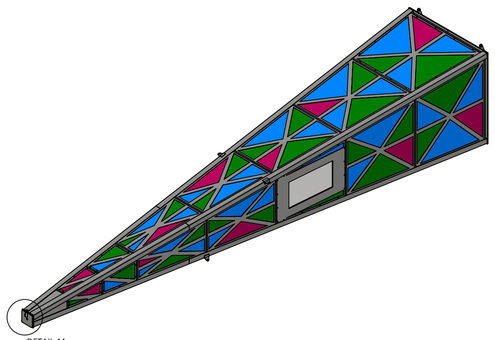

DETAIL M

ISOMETRIC

ITEM LIST

BUILD No.	PART NUMBER	DESCRIPTION	QTY
4	ANT0424-AA01-0363	TV ACCESS HATCH	3
5	ANT0424-AA01-0415	BOTTOM ACCESS HATCH	1
6 - 7	ANT0424-AA01-0003	ANTENNA	1
8	ANT0424-AA01-0378	WINDOW 7 ACCESS PLATE	4
9	ANT0424-AA01-0377	WINDOW 6 ACCESS PLATE	4
10	ANT0424-AA01-0140	W1 - P2 - GREEN - ACCESS	1
11	ANT0424-AA01-0469	W1 - P2 - BLUE- ACCESS	1
12	ANT0424-AA01-0468	W1 - P3 - GREEN - ACCESS	1
13	ANT0424-AA01-0467	W1 - P1 - PINK- ACCESS	1
14	ANT0424-AA01-0465	W1 - P1 - BLUE - ACCESS	1
15	ANT0424-AA01-0464	W1 - P3 - BLUE - ACCESS	1
16	ANT0424-AA01-0463	W3 - P4 - GREEN - ACCESS	3
17	ANT0424-AA01-0418	W3 - P5 - BLUE - ACCESS	2
18	ANT0424-AA01-0417	W3 - P5 - PINK - ACCESS	1
19	ANT0424-AA01-0379	W6 - P1 - GREEN - ACCESS	4
20	ANT0424-AA01-0380	W6 - P2 - BLUE - ACCESS	4
21	ANT0424-AA01-0382	W7 - P1 - BLUE - ACCESS	1
22	ANT0424-AA01-0381	W7 - P1 - GREEN - ACCESS	2
23	ANT0424-AA01-0431	W7 - P1 - PINK - ACCESS	2
24	ANT0424-AA01-0432	W7 - P2 - GREEN - ACCESS	1
25	ANT0424-AA01-0434	W7 - P2 - PINK - ACCESS	2
26	ANT0424-EXTR-0131	LIFTING POINT A	1
27	ANT0424-EXTR-0136	LIFTING POINT B	1
28	ANT0424-EXTR-0137	LIFTING POINT C	1
N/A	ANT0424-EXTR-0044	43" TV	3
N/A	M5 x 20 CSK SKT BOLT	M5 x 20 CSK SKT BOLT	146
N/A	M5 x 25 CSK SKT BOLT	M5 x 25 CSK SKT BOLT	112
N/A	M8 WASHER - FORM A	M8 WASHER - FORM A	12
N/A	M8 x 16 HEX SCREW	M8 x 16 HEX SCREW	12
	ANT0424-AA02-0006	DISH MOUNTING BOSS	1
29	ANT0424-EXTR-0145	LED MOUNTING BRACKET	4
	ANT0424-EXTR-0144	LED	2

GENERAL NOTES

1. IF IN DOUBT - ASK!
2. ALL DIMENSIONS ARE IN mm UNLESS STATED OTHERWISE.
3. ALL LINEAR DIMENSIONS TO BE ± 1mm UNLESS STATED OTHERWISE.
4. ALL HOLE DIMENSIONS TO BE ± 0.25mm UNLESS STATED OTHERWISE.

CONSTRUCTOR

BUILD PROCESS 1: -	BUILD PROCESS 2:	BUILD No:
BUILD PROCESS 3:	BUILD PROCESS 4:	
BUILD PROCESS 5:	BUILD PROCESS 6:	
BUILD PROCESS 7:	BUILD PROCESS 8:	BUILD QTY:
MATERIAL: N/A	WEIGHT: 1909 kg	1
FINISH: N/A	FINISH QUALITY: STANDARD	

REVISION HISTORY

REV	DESCRIPTION	DRN	DATE
A	ISSUED FOR REVIEW		

T | +44 (0)1423 358 001
E | sales@stageone.co.uk
W | www.stageone.co.uk

THIS DRAWING IS THE COPYRIGHT OF STAGE ONE CREATIVE SERVICES LTD AND SHALL NOT BE DISCLOSED OR COPIED WITHOUT WRITTEN CONSENT

CLIENT: NEWSUBSTANCE LTD
PROJECT: CO-OP LIVE ANTENNA
GROUP: EX - EXTRA
SUBGROUP: TR - EXTRA

DRAWING TYPE	DRAWN BY	PROJECTION	DRAWING SIZE	DRAWING SCALE
SP	ON		A1	1 : 25

DRAWING TITLE: CO-OP LIVE ANTENNA GA
SHEET No. 1 / 1
DRAWING NUMBER: ANT0424-EXTR-0001
REVISION A

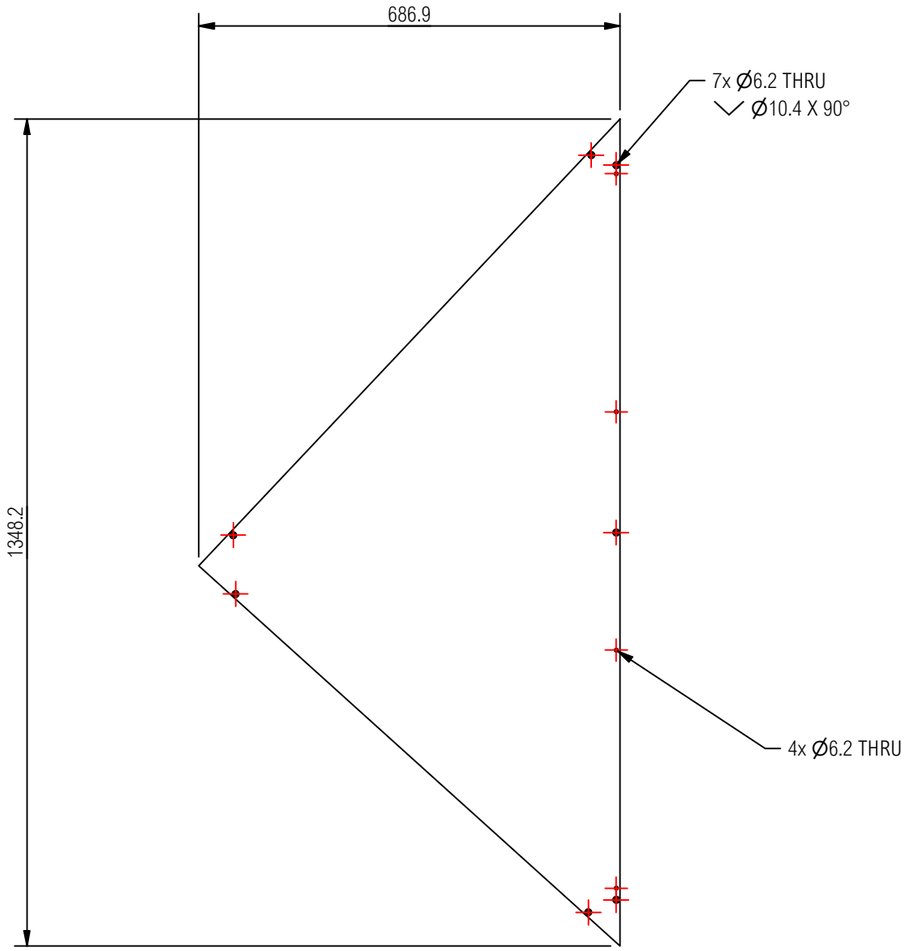

PLAN

GENERAL NOTES

1. IF IN DOUBT - ASK!
2. ALL DIMENSIONS ARE IN mm UNLESS STATED OTHERWISE.
3. ALL LINEAR DIMENSIONS TO BE ± 1mm UNLESS STATED OTHERWISE.
4. ALL HOLE DIMENSIONS TO BE ± 0.25mm UNLESS STATED OTHERWISE.

CONSTRUCTOR

BUILD PROCESS 1: CNC - 3-AXIS	BUILD PROCESS 2:		BUILD No: 10
BUILD PROCESS 3:	BUILD PROCESS 4:		
BUILD PROCESS 5:	BUILD PROCESS 6:		
BUILD PROCESS 7:	BUILD PROCESS 8:		BUILD QTY: 2
MATERIAL: PERSPEX S2 6T7A - JADE GREEN - 8 mm		WEIGHT: 4 kg	
FINISH: PERSPEX S2 6T7A - JADE GREEN		FINISH QUALITY: HIGH	

REVISION HISTORY

REV	DESCRIPTION	DRN	DATE
A	ISSUED FOR MANUFACTURING		

T | +44 (0)1423 358 001
E | sales@stageone.co.uk
W | www.stageone.co.uk

THIS DRAWING IS THE COPYRIGHT OF STAGE ONE CREATIVE SERVICES LTD AND SHALL NOT BE DISCLOSED OR COPIED WITHOUT WRITTEN CONSENT

CLIENT: NEWSUBSTANCE LTD	PROJECT: CO-OP LIVE ANTENNA
GROUP: AA - MANUFACTURED ITEMS	
SUBGROUP: 01 - LIGHT ANTENNA	

DRAWING TYPE	DRAWN BY	PROJECTION	DRAWING SIZE	DRAWING SCALE
SP	ON		A3	1 : 10

DRAWING TITLE: W1 - P2 - GREEN - ACCESS	SHEET No. 1 / 1
DRAWING NUMBER: ANT0424-AA01-0140	REVISION A,1

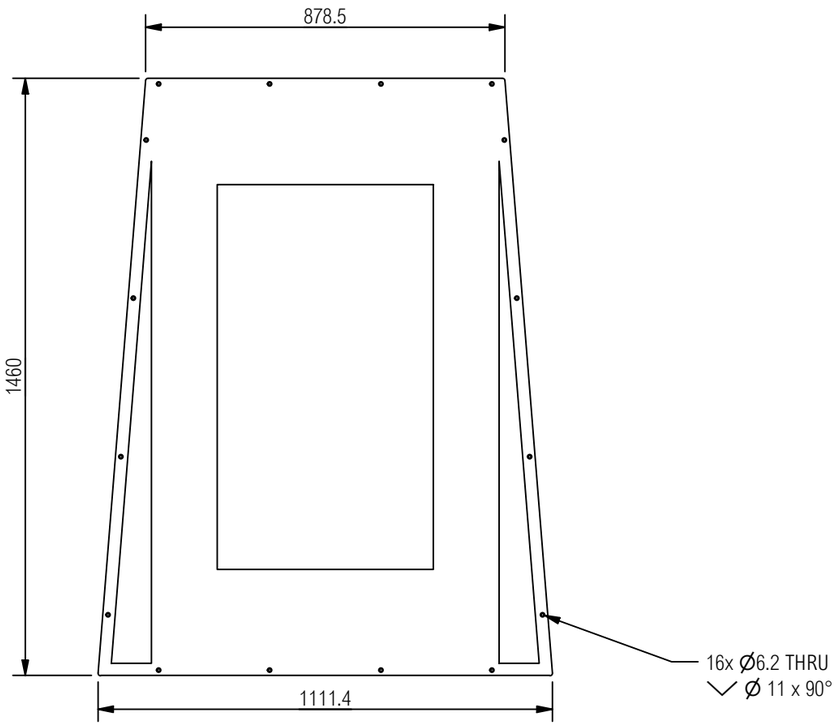

PLAN

GENERAL NOTES

DO NOT ETCH

1. IF IN DOUBT - ASK!
2. ALL DIMENSIONS ARE IN mm UNLESS STATED OTHERWISE.
3. ALL LINEAR DIMENSIONS TO BE ± 1mm UNLESS STATED OTHERWISE.
4. ALL HOLE DIMENSIONS TO BE ± 0.25mm UNLESS STATED OTHERWISE.
5. PART(S) REQUIRE COUNTERSUNK OR TAPPED HOLES.
6. SUBCONTRACT FOR PAINTING

CONSTRUCTOR

BUILD PROCESS 1:	LASER PLATE	BUILD PROCESS 2:	SUB-CONTRACT	BUILD No: 4
BUILD PROCESS 3:		BUILD PROCESS 4:		
BUILD PROCESS 5:		BUILD PROCESS 6:		
BUILD PROCESS 7:		BUILD PROCESS 8:		BUILD QTY: 6
MATERIAL:	MS PLATE S275 - 5 mm	WEIGHT:	33 kg	
FINISH:	SHOT BLASTED & PAINTED PSX 700 RAL 9003 (SIGNAL WHITE)	FINISH QUALITY:	HIGH	

REVISION HISTORY

REV	DESCRIPTION	DRN	DATE
A	ISSUED FOR MANUFACTURING		

T | +44 (0)1423 358 001
E | sales@stageone.co.uk
W | www.stageone.co.uk

THIS DRAWING IS THE COPYRIGHT OF STAGE ONE CREATIVE SERVICES LTD AND SHALL NOT BE DISCLOSED OR COPIED WITHOUT WRITTEN CONSENT

CLIENT:	NEWSUBSTANCE LTD
PROJECT:	CO-OP LIVE ANTENNA
GROUP:	AA - MANUFACTURED ITEMS
SUBGROUP:	01 - LIGHT ANTENNA

DRAWING TYPE	DRAWN BY	PROJECTION	DRAWING SIZE	DRAWING SCALE
SP	ON		A3	1 : 15

DRAWING TITLE: TV ACCESS HATCH	SHEET No. 1 / 1
DRAWING NUMBER: ANT0424-AA01-0363	REVISION A

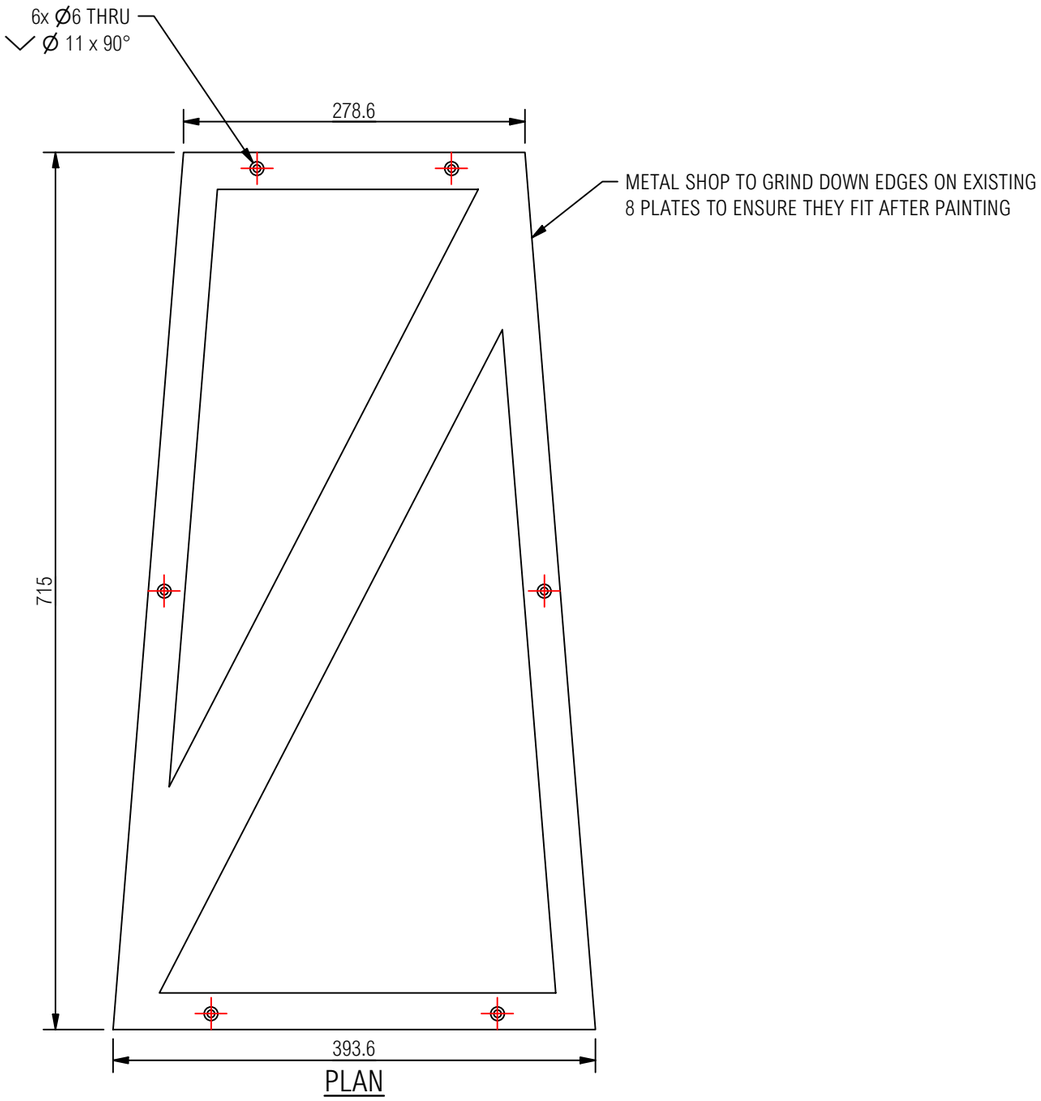

PLAN

GENERAL NOTES

THIS PART WAS ISSUED ON A SEPARATE DRAWING. IT NOW NEEDS TO BE AN ACCESS HATCH. DRILL AND COUNTERSINK HOLES USING TEMPLATE ISSUED ON DRAWING ANT0423-AA01-0466

1. IF IN DOUBT - ASK!
2. ALL DIMENSIONS ARE IN mm UNLESS STATED OTHERWISE.
3. ALL LINEAR DIMENSIONS TO BE ± 1mm UNLESS STATED OTHERWISE.
4. ALL HOLE DIMENSIONS TO BE ± 0.25mm UNLESS STATED OTHERWISE.
5. PAINTING PROCESS TO BE SUBCONTRACTED

CONSTRUCTOR

BUILD PROCESS 1: METALWORK	BUILD PROCESS 2: SUB-CONTRACT		BUILD No: 9
BUILD PROCESS 3:	BUILD PROCESS 4:		
BUILD PROCESS 5:	BUILD PROCESS 6:		
BUILD PROCESS 7:	BUILD PROCESS 8:		BUILD QTY: 8
MATERIAL: MS PLATE S275 - 5 mm		WEIGHT: 4 kg	
FINISH: SHOT BLASTED & PAINTED PSX 700 RAL 9003 (SIGNAL WHITE)		FINISH QUALITY: HIGH	

REVISION HISTORY

REV	DESCRIPTION	DRN	DATE
A,1	ISSUED FOR MANUFACTURING	ON	27/02/2024

T | +44 (0)1423 358 001
E | sales@stageone.co.uk
W | www.stageone.co.uk

THIS DRAWING IS THE COPYRIGHT OF STAGE ONE CREATIVE SERVICES LTD AND SHALL NOT BE DISCLOSED OR COPIED WITHOUT WRITTEN CONSENT

CLIENT: NEWSUBSTANCE LTD	PROJECT: CO-OP LIVE ANTENNA
GROUP: AA - MANUFACTURED ITEMS	
SUBGROUP: 01 - LIGHT ANTENNA	

DRAWING TYPE	DRAWN BY	PROJECTION	DRAWING SIZE	DRAWING SCALE
SP	ON		A3	1 : 5

DRAWING TITLE: WINDOW 6 ACCESS PLATE	SHEET No. 1 / 1
DRAWING NUMBER: ANT0424-AA01-0377	REVISION A,1

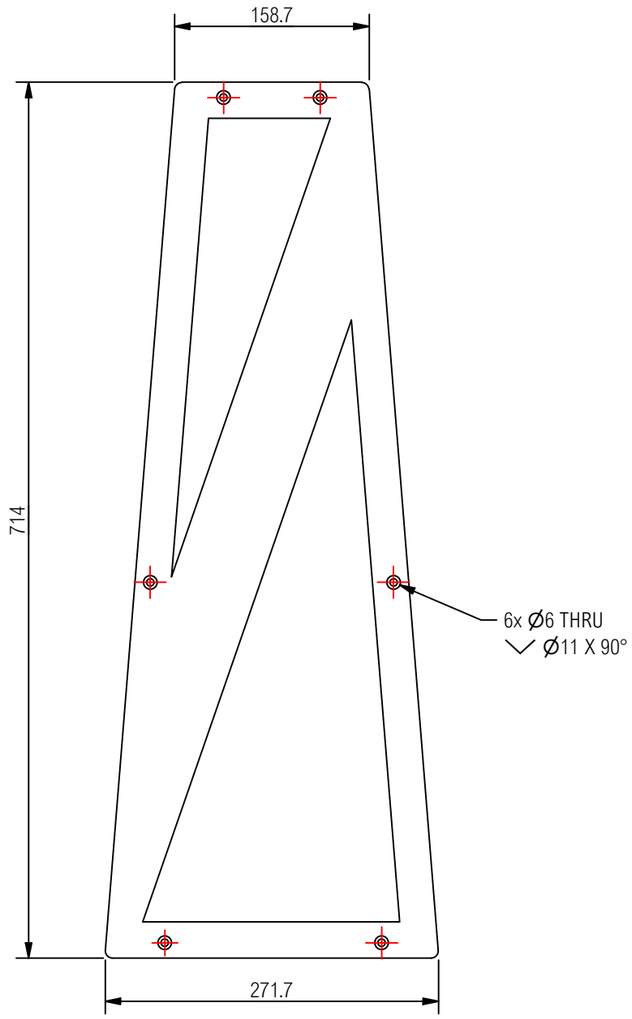

PLAN

GENERAL NOTES

1. IF IN DOUBT - ASK!
2. ALL DIMENSIONS ARE IN mm UNLESS STATED OTHERWISE.
3. ALL LINEAR DIMENSIONS TO BE ± 1mm UNLESS STATED OTHERWISE.
4. ALL HOLE DIMENSIONS TO BE ± 0.25mm UNLESS STATED OTHERWISE.
5. PAINTING PROCESS TO BE SUBCONTRACTED
6. THIS PART WAS ISSUED IN BN 1-2 BUT NEEDS TO BE RE CUT.

CONSTRUCTOR

BUILD PROCESS 1:	LASER PLATE	BUILD PROCESS 2:	SUB-CONTRACT		BUILD No: 8
BUILD PROCESS 3:		BUILD PROCESS 4:			
BUILD PROCESS 5:		BUILD PROCESS 6:			
BUILD PROCESS 7:		BUILD PROCESS 8:			BUILD QTY: 8
MATERIAL:	MS PLATE S275 - 5 mm			WEIGHT: 3 kg	
FINISH:	SHOT BLASTED & PAINTED PSX 700 RAL 9003 (SIGNAL WHITE)			FINISH QUALITY: HIGH	

REVISION HISTORY

REV	DESCRIPTION	DRN	DATE
A	ISSUED FOR MANUFACTURING		

T | +44 (0)1423 358 001
E | sales@stageone.co.uk
W | www.stageone.co.uk

THIS DRAWING IS THE COPYRIGHT OF STAGE ONE CREATIVE SERVICES LTD AND SHALL NOT BE DISCLOSED OR COPIED WITHOUT WRITTEN CONSENT

CLIENT: NEWSUBSTANCE LTD		PROJECT: CO-OP LIVE ANTENNA		
GROUP: AA - MANUFACTURED ITEMS				
SUBGROUP: 01 - LIGHT ANTENNA				
DRAWING TYPE: MF	DRAWN BY: ON	PROJECTION	DRAWING SIZE: A3	DRAWING SCALE: 1 : 5
DRAWING TITLE: WINDOW 7 ACCESS PLATE				SHEET No. 1 / 1
DRAWING NUMBER: ANT0424-AA01-0378				REVISION A,1

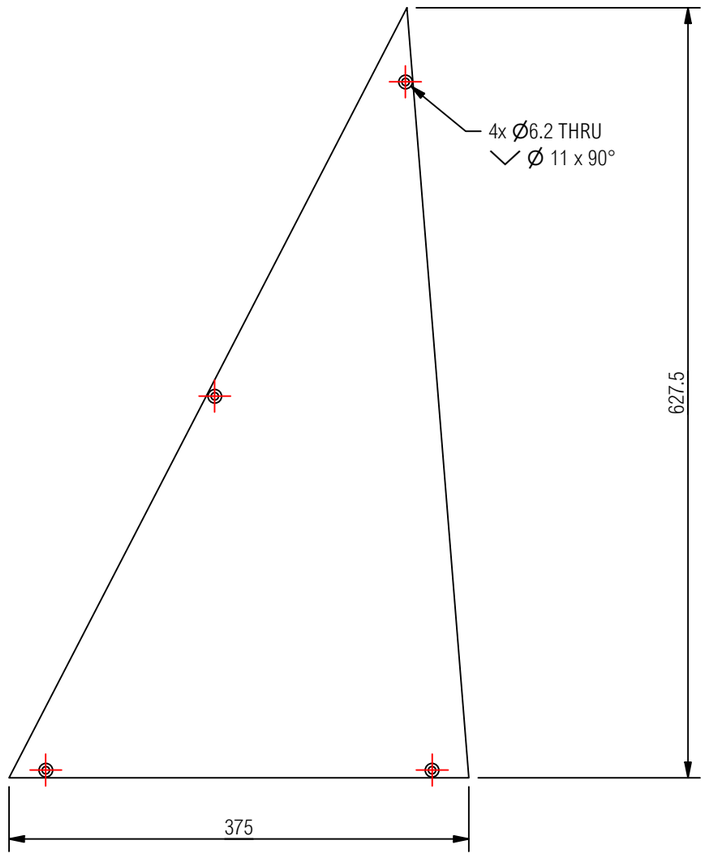

PLAN

GENERAL NOTES

1. IF IN DOUBT - ASK!
2. ALL DIMENSIONS ARE IN mm UNLESS STATED OTHERWISE.
3. ALL LINEAR DIMENSIONS TO BE ± 1mm UNLESS STATED OTHERWISE.
4. ALL HOLE DIMENSIONS TO BE ± 0.25mm UNLESS STATED OTHERWISE.
5. PART REQUIRE COUNTERSUNK HOLES.

CONSTRUCTOR

BUILD PROCESS 1: CNC - 3-AXIS	BUILD PROCESS 2:		BUILD No: 19
BUILD PROCESS 3:	BUILD PROCESS 4:		
BUILD PROCESS 5:	BUILD PROCESS 6:		
BUILD PROCESS 7:	BUILD PROCESS 8:		BUILD QTY: 8
MATERIAL: PERSPEX S2 6T7A - JADE GREEN - 8 mm		WEIGHT: 1 kg	
FINISH: PERSPEX S2 6T7A - JADE GREEN		FINISH QUALITY: HIGH	

REVISION HISTORY

REV	DESCRIPTION	DRN	DATE
A,1	ISSUED FOR MANUFACTURING	ON	28/02/2024

T | +44 (0)1423 358 001
E | sales@stageone.co.uk
W | www.stageone.co.uk

THIS DRAWING IS THE COPYRIGHT OF STAGE ONE CREATIVE SERVICES LTD AND SHALL NOT BE DISCLOSED OR COPIED WITHOUT WRITTEN CONSENT

CLIENT: NEWSUBSTANCE LTD	PROJECT: CO-OP LIVE ANTENNA
GROUP: AA - MANUFACTURED ITEMS	
SUBGROUP: 01 - LIGHT ANTENNA	

DRAWING TYPE	DRAWN BY	PROJECTION	DRAWING SIZE	DRAWING SCALE
SP	ON		A3	1 : 5

DRAWING TITLE: W6 - P1 - GREEN - ACCESS	SHEET No. 1 / 1
DRAWING NUMBER: ANT0424-AA01-0379	REVISION A,1

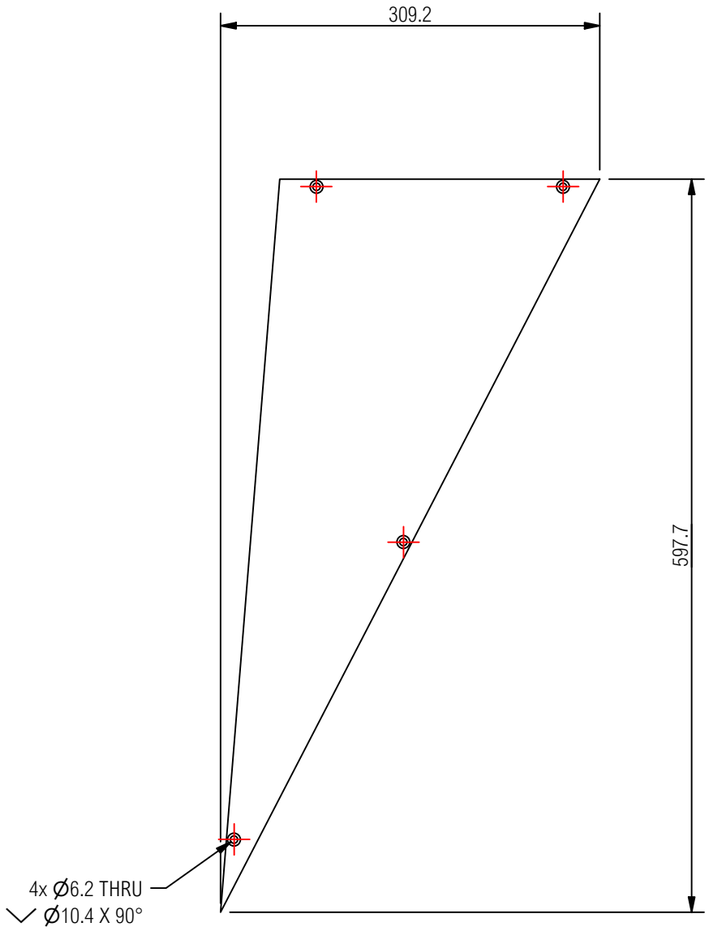

PLAN

GENERAL NOTES

1. IF IN DOUBT - ASK!
2. ALL DIMENSIONS ARE IN mm UNLESS STATED OTHERWISE.
3. ALL LINEAR DIMENSIONS TO BE ± 1mm UNLESS STATED OTHERWISE.
4. ALL HOLE DIMENSIONS TO BE ± 0.25mm UNLESS STATED OTHERWISE.
5. PART REQUIRE COUNTERSUNK HOLES.

CONSTRUCTOR

BUILD PROCESS 1: CNC - 3-AXIS	BUILD PROCESS 2:	BUILD No: 20
BUILD PROCESS 3:	BUILD PROCESS 4:	
BUILD PROCESS 5:	BUILD PROCESS 6:	
BUILD PROCESS 7:	BUILD PROCESS 8:	BUILD QTY: 8
MATERIAL: PERSPEX S2 7T1F - AZURE BLUE - 8 mm	WEIGHT: 1 kg	
FINISH: PERSPEX S2 7T1F - AZURE BLUE	FINISH QUALITY: HIGH	

REVISION HISTORY

REV	DESCRIPTION	DRN	DATE
A,1	ISSUED FOR MANUFACTURING	ON	28/02/2024

T | +44 (0)1423 358 001
E | sales@stageone.co.uk
W | www.stageone.co.uk

THIS DRAWING IS THE COPYRIGHT OF STAGE ONE CREATIVE SERVICES LTD AND SHALL NOT BE DISCLOSED OR COPIED WITHOUT WRITTEN CONSENT

CLIENT: NEWSUBSTANCE LTD

PROJECT: CO-OP LIVE ANTENNA

GROUP: AA - MANUFACTURED ITEMS

SUBGROUP: 01 - LIGHT ANTENNA

DRAWING TYPE	DRAWN BY	PROJECTION	DRAWING SIZE	DRAWING SCALE
SP	ON		A3	1 : 5

DRAWING TITLE: W6 - P2 - BLUE - ACCESS

SHEET No. 1 / 1

DRAWING NUMBER: ANT0424-AA01-0380

REVISION A,1

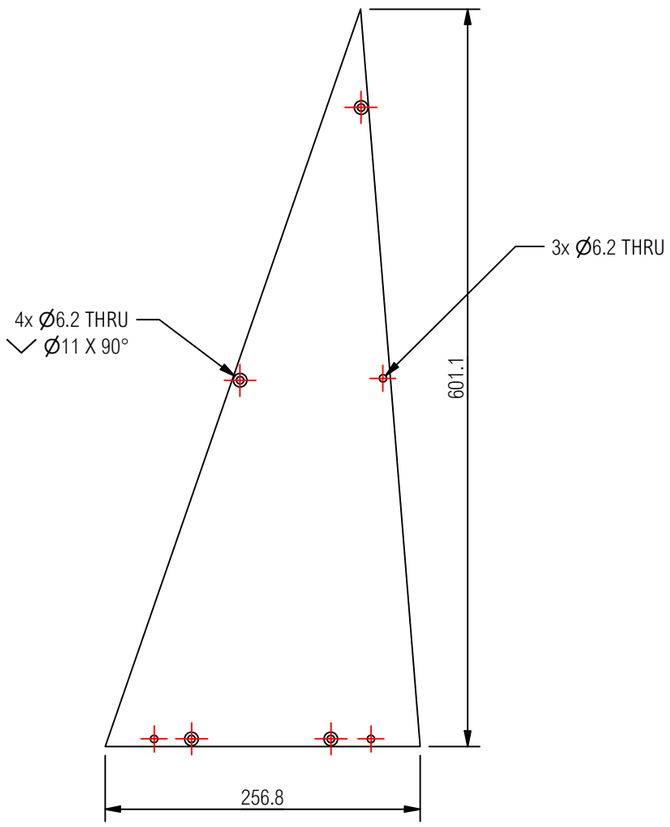

PLAN

GENERAL NOTES

1. IF IN DOUBT - ASK!
2. ALL DIMENSIONS ARE IN mm UNLESS STATED OTHERWISE.
3. ALL LINEAR DIMENSIONS TO BE ± 1mm UNLESS STATED OTHERWISE.
4. ALL HOLE DIMENSIONS TO BE ± 0.25mm UNLESS STATED OTHERWISE.
5. PART REQUIRE COUNTERSUNK HOLES.

CONSTRUCTOR

BUILD PROCESS 1: CNC - 3-AXIS	BUILD PROCESS 2:		BUILD No: 22
BUILD PROCESS 3:	BUILD PROCESS 4:		
BUILD PROCESS 5:	BUILD PROCESS 6:		
BUILD PROCESS 7:	BUILD PROCESS 8:		BUILD QTY: 4
MATERIAL: PERSPEX S2 6T7A - JADE GREEN - 8 mm		WEIGHT: 1 kg	
FINISH: PERSPEX S2 6T7A - JADE GREEN		FINISH QUALITY: HIGH	

REVISION HISTORY

REV	DESCRIPTION	DRN	DATE
A,1	ISSUED FOR MANUFACTURING	ON	28/02/2024

T | +44 (0)1423 358 001
E | sales@stageone.co.uk
W | www.stageone.co.uk

THIS DRAWING IS THE COPYRIGHT OF STAGE ONE CREATIVE SERVICES LTD AND SHALL NOT BE DISCLOSED OR COPIED WITHOUT WRITTEN CONSENT

CLIENT: NEWSUBSTANCE LTD	PROJECT: CO-OP LIVE ANTENNA
GROUP: AA - MANUFACTURED ITEMS	
SUBGROUP: 01 - LIGHT ANTENNA	

DRAWING TYPE	DRAWN BY	PROJECTION	DRAWING SIZE	DRAWING SCALE
SP	ON		A3	1 : 5

DRAWING TITLE: W7 - P1 - GREEN - ACCESS	SHEET No. 1 / 1
DRAWING NUMBER: ANT0424-AA01-0381	REVISION A,1

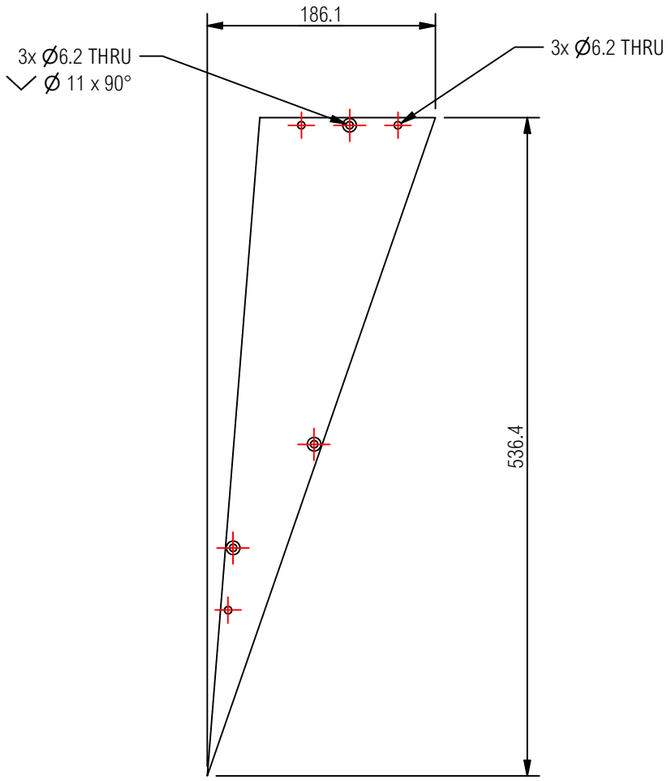

PLAN

GENERAL NOTES

1. IF IN DOUBT - ASK!
2. ALL DIMENSIONS ARE IN mm UNLESS STATED OTHERWISE.
3. ALL LINEAR DIMENSIONS TO BE ± 1mm UNLESS STATED OTHERWISE.
4. ALL HOLE DIMENSIONS TO BE ± 0.25mm UNLESS STATED OTHERWISE.
5. PART REQUIRE COUNTERSUNK HOLES.

CONSTRUCTOR

BUILD PROCESS 1: CNC - 3-AXIS	BUILD PROCESS 2:	BUILD No: 21
BUILD PROCESS 3:	BUILD PROCESS 4:	
BUILD PROCESS 5:	BUILD PROCESS 6:	
BUILD PROCESS 7:	BUILD PROCESS 8:	BUILD QTY: 2
MATERIAL: PERSPEX S2 7T1F - AZURE BLUE - 8 mm	WEIGHT: 0 kg	
FINISH: PERSPEX S2 7T1F - AZURE BLUE	FINISH QUALITY: HIGH	

REVISION HISTORY

REV	DESCRIPTION	DRN	DATE
A,1	ISSUED FOR MANUFACTURING	ON	28/02/2024

T | +44 (0)1423 358 001
E | sales@stageone.co.uk
W | www.stageone.co.uk

THIS DRAWING IS THE COPYRIGHT OF STAGE ONE CREATIVE SERVICES LTD AND SHALL NOT BE DISCLOSED OR COPIED WITHOUT WRITTEN CONSENT

CLIENT: NEWSUBSTANCE LTD	PROJECT: CO-OP LIVE ANTENNA
GROUP: AA - MANUFACTURED ITEMS	
SUBGROUP: 01 - LIGHT ANTENNA	

DRAWING TYPE	DRAWN BY	PROJECTION	DRAWING SIZE	DRAWING SCALE
SP	ON		A3	1 : 5

DRAWING TITLE: W7 - P1 - BLUE - ACCESS	SHEET No. 1 / 1
DRAWING NUMBER: ANT0424-AA01-0382	REVISION A,1

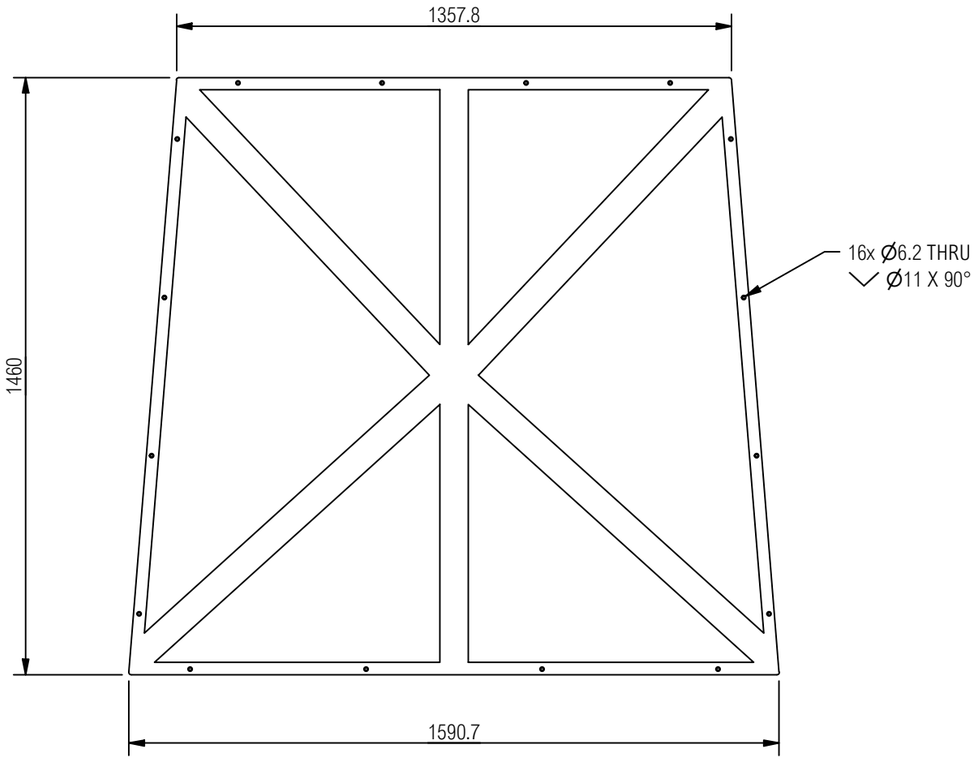

PLAN

GENERAL NOTES

DO NOT ETCH

1. IF IN DOUBT - ASK!
2. ALL DIMENSIONS ARE IN mm UNLESS STATED OTHERWISE.
3. ALL LINEAR DIMENSIONS TO BE ± 1mm UNLESS STATED OTHERWISE.
4. ALL HOLE DIMENSIONS TO BE ± 0.25mm UNLESS STATED OTHERWISE.
5. PART(S) REQUIRE COUNTERSUNK OR TAPPED HOLES.
6. SUBCONTRACT FOR PAINTING

CONSTRUCTOR

BUILD PROCESS 1:	LASER PLATE	BUILD PROCESS 2:	SUB-CONTRACT	BUILD No: 5
BUILD PROCESS 3:		BUILD PROCESS 4:		
BUILD PROCESS 5:		BUILD PROCESS 6:		
BUILD PROCESS 7:		BUILD PROCESS 8:		BUILD QTY: 2
MATERIAL:	MS PLATE S275 - 5 mm	WEIGHT:	21 kg	
FINISH:	SHOT BLASTED & PAINTED PSX 700 RAL 9003 (SIGNAL WHITE)	FINISH QUALITY:	HIGH	

REVISION HISTORY

REV	DESCRIPTION	DRN	DATE
A,1	ISSUED FOR MANUFACTURING	ON	23/02/2024

T | +44 (0)1423 358 001
E | sales@stageone.co.uk
W | www.stageone.co.uk

THIS DRAWING IS THE COPYRIGHT OF STAGE ONE CREATIVE SERVICES LTD AND SHALL NOT BE DISCLOSED OR COPIED WITHOUT WRITTEN CONSENT

CLIENT:	NEWSUBSTANCE LTD
PROJECT:	CO-OP LIVE ANTENNA
GROUP:	AA - MANUFACTURED ITEMS
SUBGROUP:	01 - LIGHT ANTENNA

DRAWING TYPE	DRAWN BY	PROJECTION	DRAWING SIZE	DRAWING SCALE
SP	ON		A3	1 : 15

DRAWING TITLE: BOTTOM ACCESS HATCH

SHEET No. 1 / 1

DRAWING NUMBER: ANT0424-AA01-0415

REVISION A,1

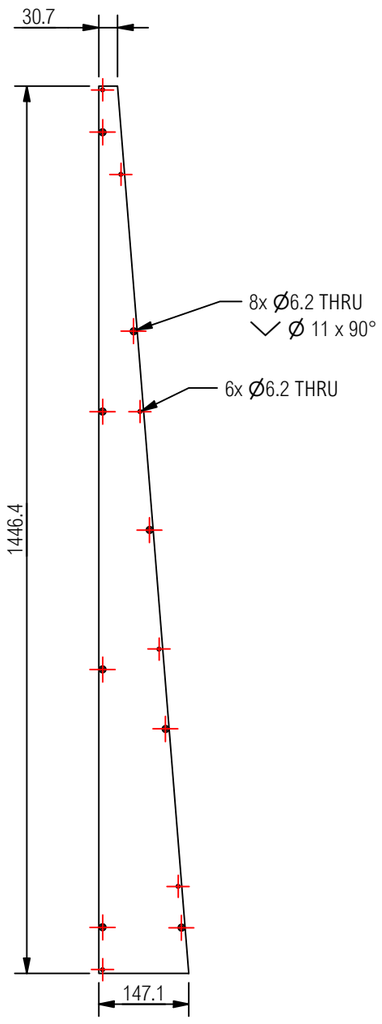

PLAN

GENERAL NOTES

1. IF IN DOUBT - ASK!
2. ALL DIMENSIONS ARE IN mm UNLESS STATED OTHERWISE.
3. ALL LINEAR DIMENSIONS TO BE ± 1mm UNLESS STATED OTHERWISE.
4. ALL HOLE DIMENSIONS TO BE ± 0.25mm UNLESS STATED OTHERWISE.
5. PART REQUIRE COUNTERSUNK HOLES.

CONSTRUCTOR

BUILD PROCESS 1: CNC - 3-AXIS	BUILD PROCESS 2:		BUILD No: 18
BUILD PROCESS 3:	BUILD PROCESS 4:		
BUILD PROCESS 5:	BUILD PROCESS 6:		
BUILD PROCESS 7:	BUILD PROCESS 8:		BUILD QTY: 2
MATERIAL: PERSPEX S2 8T14 - VIOLET HEATHER - 8 mm		WEIGHT: 1 kg	
FINISH: PERSPEX S2 8T14 - VIOLET HEATHER		FINISH QUALITY: HIGH	

REVISION HISTORY

REV	DESCRIPTION	DRN	DATE
A,1	ISSUED FOR MANUFACTURING	ON	28/02/2024

T | +44 (0)1423 358 001
E | sales@stageone.co.uk
W | www.stageone.co.uk

THIS DRAWING IS THE COPYRIGHT OF STAGE ONE CREATIVE SERVICES LTD AND SHALL NOT BE DISCLOSED OR COPIED WITHOUT WRITTEN CONSENT

CLIENT: NEWSUBSTANCE LTD	PROJECT: CO-OP LIVE ANTENNA
GROUP: AA - MANUFACTURED ITEMS	
SUBGROUP: 01 - LIGHT ANTENNA	

DRAWING TYPE	DRAWN BY	PROJECTION	DRAWING SIZE	DRAWING SCALE
SP	ON		A3	1 : 10

DRAWING TITLE: W3 - P5 - PINK - ACCESS	SHEET No. 1 / 1
DRAWING NUMBER: ANT0424-AA01-0417	REVISION A,1

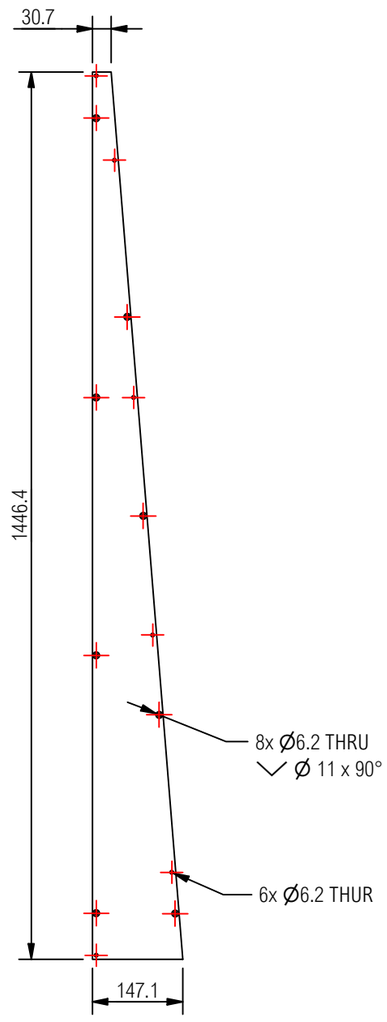

PLAN

GENERAL NOTES

1. IF IN DOUBT - ASK!
2. ALL DIMENSIONS ARE IN mm UNLESS STATED OTHERWISE.
3. ALL LINEAR DIMENSIONS TO BE ± 1mm UNLESS STATED OTHERWISE.
4. ALL HOLE DIMENSIONS TO BE ± 0.25mm UNLESS STATED OTHERWISE.
5. PART REQUIRE COUNTERSUNK HOLES.

CONSTRUCTOR

BUILD PROCESS 1: CNC - 3-AXIS	BUILD PROCESS 2:	BUILD No: 17
BUILD PROCESS 3:	BUILD PROCESS 4:	
BUILD PROCESS 5:	BUILD PROCESS 6:	
BUILD PROCESS 7:	BUILD PROCESS 8:	BUILD QTY: 4
MATERIAL: PERSPEX S2 7T1F - AZURE BLUE - 8 mm	WEIGHT: 1 kg	
FINISH: PERSPEX S2 7T1F - AZURE BLUE	FINISH QUALITY: HIGH	

REVISION HISTORY

REV	DESCRIPTION	DRN	DATE
A,1	ISSUED FOR MANUFACTURING	ON	28/02/2024

T | +44 (0)1423 358 001
E | sales@stageone.co.uk
W | www.stageone.co.uk

THIS DRAWING IS THE COPYRIGHT OF STAGE ONE CREATIVE SERVICES LTD AND SHALL NOT BE DISCLOSED OR COPIED WITHOUT WRITTEN CONSENT

CLIENT: NEWSUBSTANCE LTD	PROJECT: CO-OP LIVE ANTENNA
GROUP: AA - MANUFACTURED ITEMS	
SUBGROUP: 01 - LIGHT ANTENNA	

DRAWING TYPE	DRAWN BY	PROJECTION	DRAWING SIZE	DRAWING SCALE
SP	ON		A3	1 : 10

DRAWING TITLE: W3 - P5 - BLUE - ACCESS	SHEET No. 1 / 1
DRAWING NUMBER: ANT0424-AA01-0418	REVISION A,1

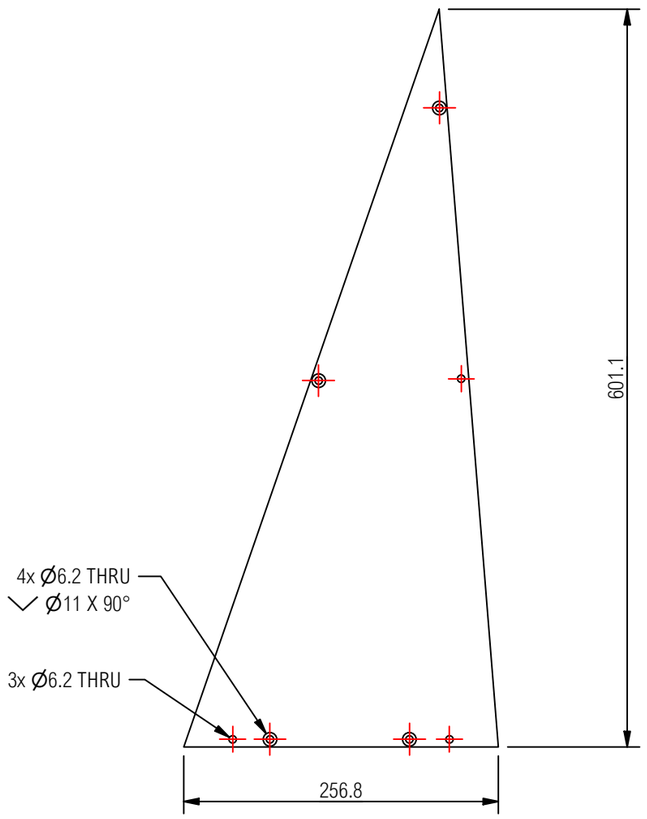

PLAN

GENERAL NOTES

1. IF IN DOUBT - ASK!
2. ALL DIMENSIONS ARE IN mm UNLESS STATED OTHERWISE.
3. ALL LINEAR DIMENSIONS TO BE ± 1mm UNLESS STATED OTHERWISE.
4. ALL HOLE DIMENSIONS TO BE ± 0.25mm UNLESS STATED OTHERWISE.
5. PART REQUIRE COUNTERSUNK HOLES.

CONSTRUCTOR

BUILD PROCESS 1: CNC - 3-AXIS	BUILD PROCESS 2:	BUILD No: 23
BUILD PROCESS 3:	BUILD PROCESS 4:	
BUILD PROCESS 5:	BUILD PROCESS 6:	
BUILD PROCESS 7:	BUILD PROCESS 8:	BUILD QTY: 4
MATERIAL: PERSPEX S2 8T14 - VIOLET HEATHER - 8 mm	WEIGHT: 1 kg	
FINISH: PERSPEX S2 8T14 - VIOLET HEATHER	FINISH QUALITY: HIGH	

REVISION HISTORY

REV	DESCRIPTION	DRN	DATE
A,1	ISSUED FOR MANUFACTURING	ON	28/02/2024

T | +44 (0)1423 358 001
E | sales@stageone.co.uk
W | www.stageone.co.uk

THIS DRAWING IS THE COPYRIGHT OF STAGE ONE CREATIVE SERVICES LTD AND SHALL NOT BE DISCLOSED OR COPIED WITHOUT WRITTEN CONSENT

CLIENT: NEWSUBSTANCE LTD	PROJECT: CO-OP LIVE ANTENNA
GROUP: AA - MANUFACTURED ITEMS	
SUBGROUP: 01 - LIGHT ANTENNA	

DRAWING TYPE	DRAWN BY	PROJECTION	DRAWING SIZE	DRAWING SCALE
SP	ON		A3	1 : 5

DRAWING TITLE: W7 - P1 - PINK - ACCESS	SHEET No. 1 / 1
DRAWING NUMBER: ANT0424-AA01-0431	REVISION A,1

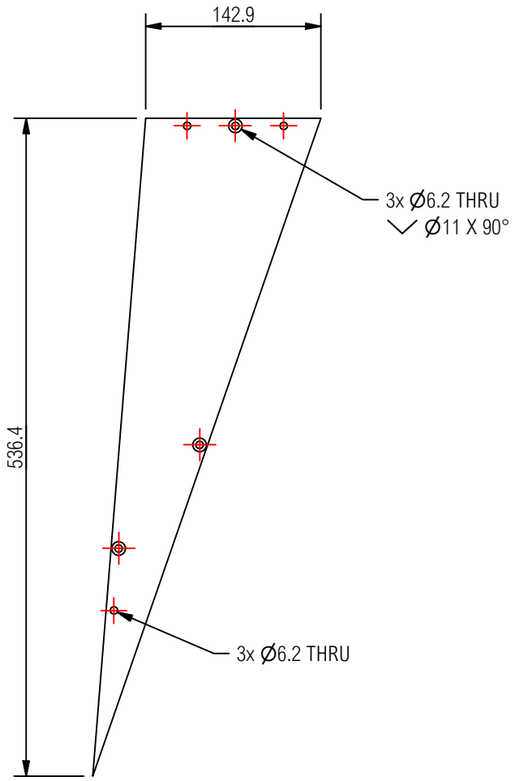

VIEW1

GENERAL NOTES

1. IF IN DOUBT - ASK!
2. ALL DIMENSIONS ARE IN mm UNLESS STATED OTHERWISE.
3. ALL LINEAR DIMENSIONS TO BE ± 1mm UNLESS STATED OTHERWISE.
4. ALL HOLE DIMENSIONS TO BE ± 0.25mm UNLESS STATED OTHERWISE.
5. PART REQUIRE COUNTERSUNK HOLES.

CONSTRUCTOR

BUILD PROCESS 1: CNC - 3-AXIS	BUILD PROCESS 2:	BUILD No: 24
BUILD PROCESS 3:	BUILD PROCESS 4:	
BUILD PROCESS 5:	BUILD PROCESS 6:	
BUILD PROCESS 7:	BUILD PROCESS 8:	BUILD QTY: 2
MATERIAL: PERSPEX S2 6T7A - JADE GREEN - 8 mm	WEIGHT: 0 kg	
FINISH: PERSPEX S2 6T7A - JADE GREEN	FINISH QUALITY: HIGH	

REVISION HISTORY

REV	DESCRIPTION	DRN	DATE
A,1	ISSUED FOR MANUFACTURING	ON	28/02/2024

T | +44 (0)1423 358 001
E | sales@stageone.co.uk
W | www.stageone.co.uk

THIS DRAWING IS THE COPYRIGHT OF STAGE ONE CREATIVE SERVICES LTD AND SHALL NOT BE DISCLOSED OR COPIED WITHOUT WRITTEN CONSENT

CLIENT: NEWSUBSTANCE LTD	PROJECT: CO-OP LIVE ANTENNA
GROUP: AA - MANUFACTURED ITEMS	
SUBGROUP: 01 - LIGHT ANTENNA	

DRAWING TYPE	DRAWN BY	PROJECTION	DRAWING SIZE	DRAWING SCALE
SP	ON		A3	1 : 5

DRAWING TITLE: W7 - P2 - GREEN - ACCESS	SHEET No. 1 / 1
DRAWING NUMBER: ANT0424-AA01-0432	REVISION A,1

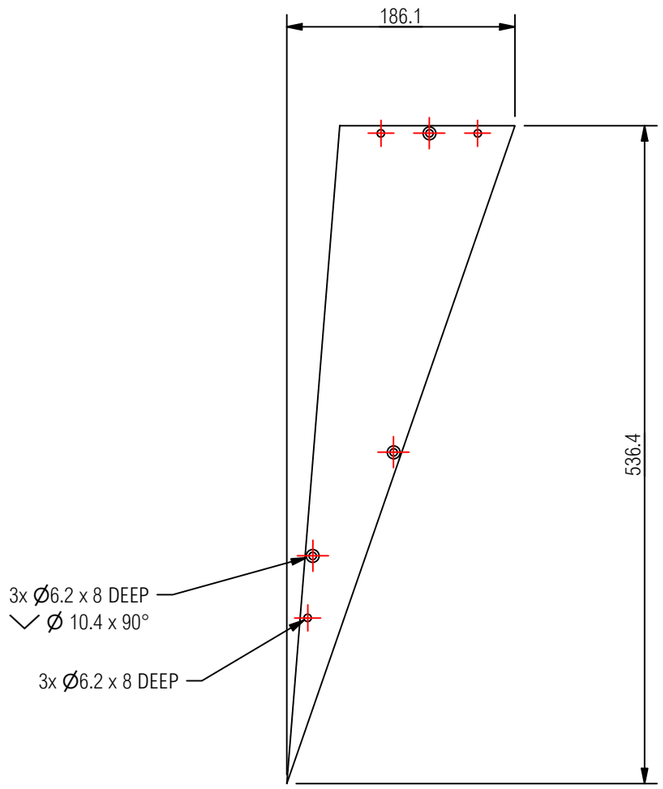

PLAN

GENERAL NOTES

1. IF IN DOUBT - ASK!
2. ALL DIMENSIONS ARE IN mm UNLESS STATED OTHERWISE.
3. ALL LINEAR DIMENSIONS TO BE ± 1mm UNLESS STATED OTHERWISE.
4. ALL HOLE DIMENSIONS TO BE ± 0.25mm UNLESS STATED OTHERWISE.
5. PART REQUIRE COUNTERSUNK HOLES.

CONSTRUCTOR

BUILD PROCESS 1: CNC - 3-AXIS	BUILD PROCESS 2:	BUILD No: 25
BUILD PROCESS 3:	BUILD PROCESS 4:	
BUILD PROCESS 5:	BUILD PROCESS 6:	
BUILD PROCESS 7:	BUILD PROCESS 8:	BUILD QTY: 4
MATERIAL: PERSPEX S2 8T14 - VIOLET HEATHER - 8 mm	WEIGHT: 0 kg	
FINISH: PERSPEX S2 8T14 - VIOLET HEATHER	FINISH QUALITY: HIGH	

REVISION HISTORY

REV	DESCRIPTION	DRN	DATE
A,1	ISSUED FOR MANUFACTURING	ON	28/02/2024

T | +44 (0)1423 358 001
E | sales@stageone.co.uk
W | www.stageone.co.uk

THIS DRAWING IS THE COPYRIGHT OF STAGE ONE CREATIVE SERVICES LTD AND SHALL NOT BE DISCLOSED OR COPIED WITHOUT WRITTEN CONSENT

CLIENT: NEWSUBSTANCE LTD	PROJECT: CO-OP LIVE ANTENNA
GROUP: AA - MANUFACTURED ITEMS	
SUBGROUP: 01 - LIGHT ANTENNA	

DRAWING TYPE	DRAWN BY	PROJECTION	DRAWING SIZE	DRAWING SCALE
SP	ON		A3	1 : 5

DRAWING TITLE: W7 - P2 - PINK - ACCESS	SHEET No. 1 / 1
DRAWING NUMBER: ANT0424-AA01-0434	REVISION A,1

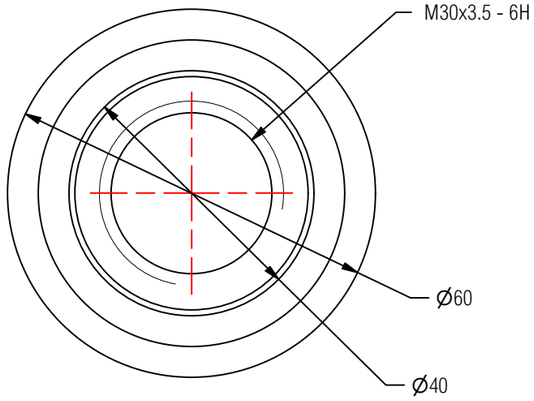

PLAN

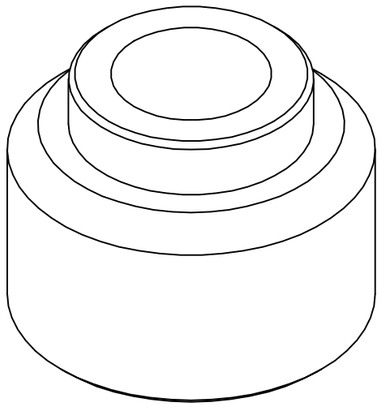

ISOMETRIC

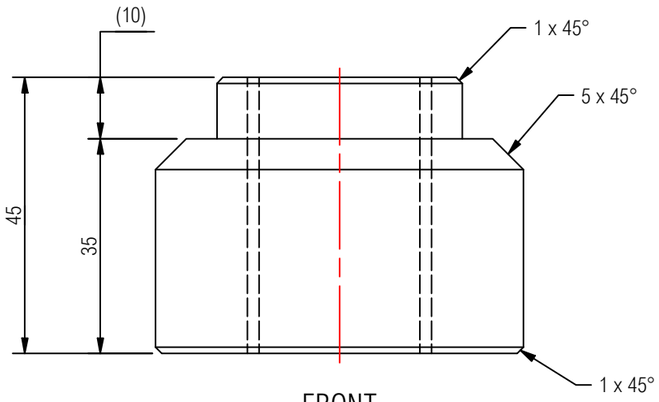

FRONT

REV	DESCRIPTION	DRN	DATE
A	ISSUED FOR MANUFACTURING		

REVISION HISTORY

GENERAL NOTES

1. IF IN DOUBT - ASK!
2. PART OF BUILD NUMBER 1 - 2

DO NOT ETCH

IMPLIED TOL'S

TOLERANCE EXCEPT WHERE OTHERWISE STATED
ALL DIMENSIONS ARE IN mm UNLESS STATED OTHERWISE

SIZE		TOLERANCE
0.5	UP TO 3	± 0.2
OVER 3	UP TO 6	± 0.3
OVER 6	UP TO 30	± 0.5
OVER 30	UP TO 120	± 0.8
OVER 120	UP TO 400	± 1.2
OVER 400	UP TO 1000	± 2
OVER 1000	UP TO 2000	± 3
ON ANGLE	ON ANGLE	± 0°10'

COARSE

T | +44 (0)1423 358 001
E | sales@stageone.co.uk
W | www.stageone.co.uk

CONSTRUCTOR

BUILD PROCESS 1: MACHINING	BUILD PROCESS 2:	BUILD No: 3
BUILD PROCESS 3:	BUILD PROCESS 4:	BUILD QTY: 2
MATERIAL: MILD STEEL EN3B - 70 mm		WEIGHT: 0.656 kg
PO NUMBER: 242113		
FINISH: BRIGHT BAR - NO FINISH		FINISH QUALITY: STANDARD

THIS DRAWING IS THE COPYRIGHT OF STAGE ONE CREATIVE SERVICES LTD AND SHALL NOT BE DISCLOSED OR COPIED WITHOUT WRITTEN CONSENT

GROUP: AA - MANUFACTURED ITEMS
SUBGROUP: 01 -LIGHT ANTENNA
DRAWING TITLE: LIFTING BOSS
DRAWING NUMBER: ANT0424-AA01-0459
PROJECTION:

SHEET NO:	DWG SIZE:	DWG TYPE:
1/1	A3	SP
DWG SCALE: 1 : 1	DWG BY: ON	REVISION: A

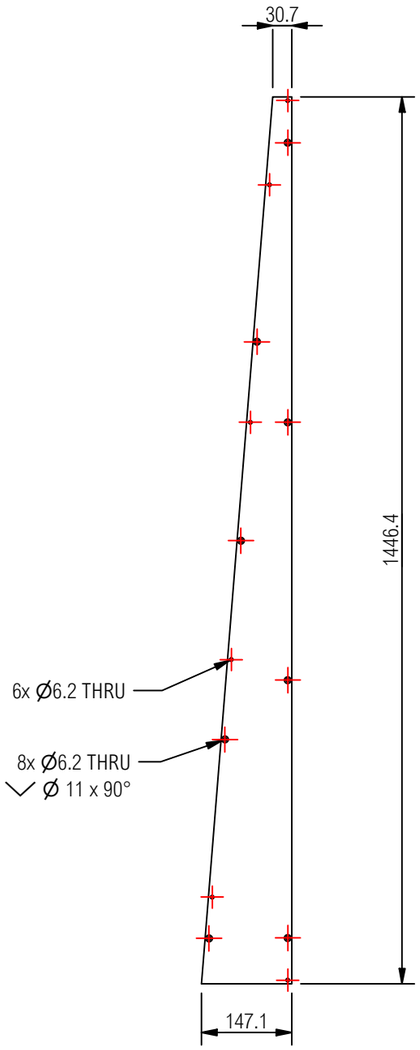

PLAN

GENERAL NOTES

1. IF IN DOUBT - ASK!
2. ALL DIMENSIONS ARE IN mm UNLESS STATED OTHERWISE.
3. ALL LINEAR DIMENSIONS TO BE ± 1mm UNLESS STATED OTHERWISE.
4. ALL HOLE DIMENSIONS TO BE ± 0.25mm UNLESS STATED OTHERWISE.
5. PART REQUIRE COUNTERSUNK HOLES.

CONSTRUCTOR

BUILD PROCESS 1: CNC - 3-AXIS	BUILD PROCESS 2:		BUILD No: 16
BUILD PROCESS 3:	BUILD PROCESS 4:		
BUILD PROCESS 5:	BUILD PROCESS 6:		
BUILD PROCESS 7:	BUILD PROCESS 8:		BUILD QTY: 6
MATERIAL: PERSPEX S2 6T7A - JADE GREEN - 8 mm		WEIGHT: 1 kg	
FINISH: PERSPEX S2 6T7A - JADE GREEN		FINISH QUALITY: HIGH	

REVISION HISTORY

REV	DESCRIPTION	DRN	DATE
A,1	ISSUED FOR MANUFACTURING	ON	28/02/2024

T | +44 (0)1423 358 001
E | sales@stageone.co.uk
W | www.stageone.co.uk

THIS DRAWING IS THE COPYRIGHT OF STAGE ONE CREATIVE SERVICES LTD AND SHALL NOT BE DISCLOSED OR COPIED WITHOUT WRITTEN CONSENT

CLIENT: NEWSUBSTANCE LTD	PROJECT: CO-OP LIVE ANTENNA
GROUP: AA - MANUFACTURED ITEMS	
SUBGROUP: 01 - LIGHT ANTENNA	

DRAWING TYPE	DRAWN BY	PROJECTION	DRAWING SIZE	DRAWING SCALE
SP	ON		A3	1 : 10

DRAWING TITLE: W3 - P4 - GREEN - ACCESS	SHEET No. 1 / 1
DRAWING NUMBER: ANT0424-AA01-0463	REVISION A,1

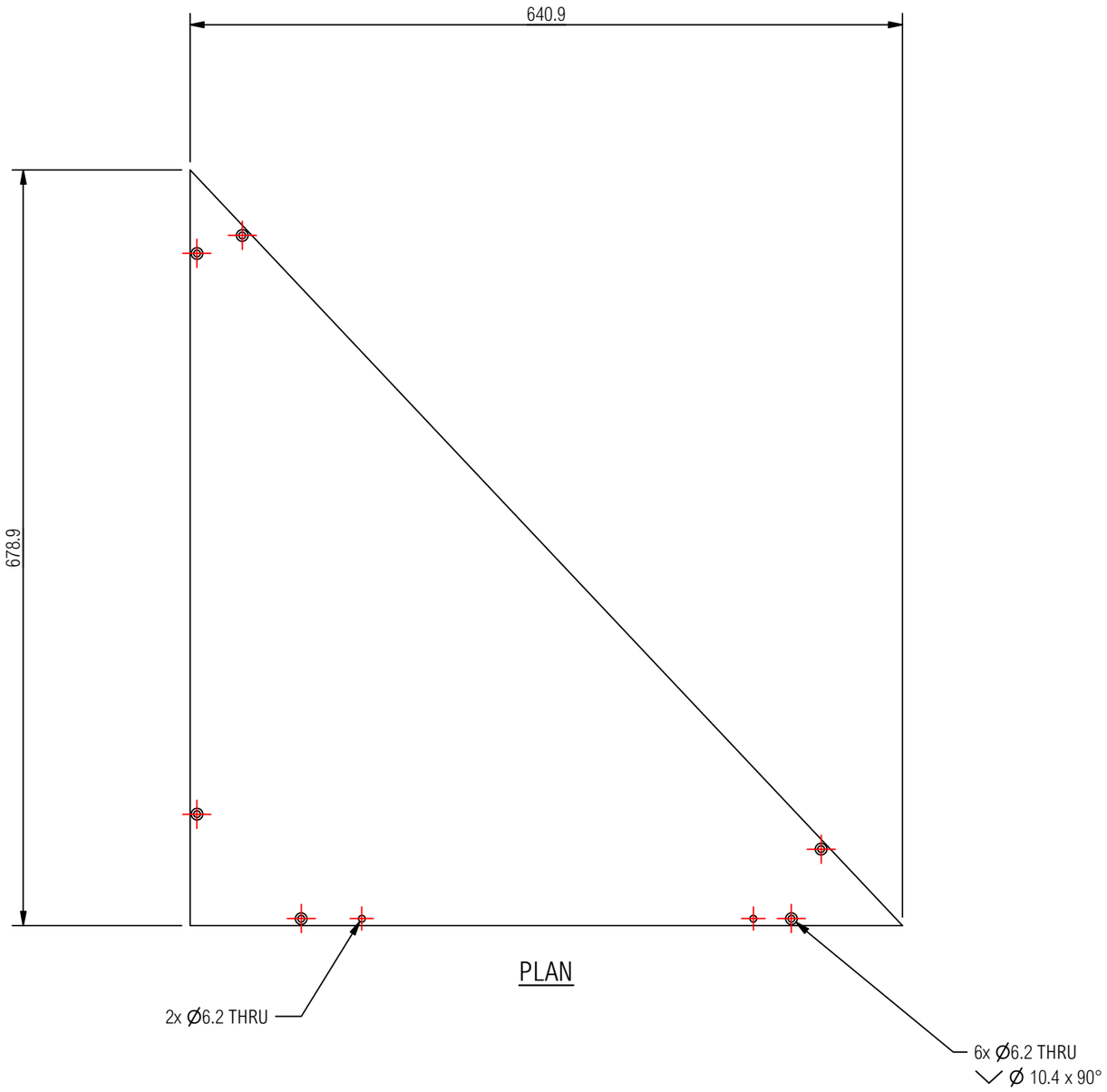

PLAN

GENERAL NOTES

1. IF IN DOUBT - ASK!
2. ALL DIMENSIONS ARE IN mm UNLESS STATED OTHERWISE.
3. ALL LINEAR DIMENSIONS TO BE ± 1mm UNLESS STATED OTHERWISE.
4. ALL HOLE DIMENSIONS TO BE ± 0.25mm UNLESS STATED OTHERWISE.

CONSTRUCTOR

BUILD PROCESS 1: CNC - 3-AXIS	BUILD PROCESS 2:	BUILD No: 15
BUILD PROCESS 3:	BUILD PROCESS 4:	
BUILD PROCESS 5:	BUILD PROCESS 6:	
BUILD PROCESS 7:	BUILD PROCESS 8:	BUILD QTY: 2
MATERIAL: PERSPEX S2 7T1F - AZURE BLUE - 8 mm	WEIGHT: 2 kg	
FINISH: PERSPEX S2 7T1F - AZURE BLUE	FINISH QUALITY: HIGH	

REVISION HISTORY

REV	DESCRIPTION	DRN	DATE
A,1	ISSUED FOR MANUFACTURING	ON	27/02/2024

T | +44 (0)1423 358 001
E | sales@stageone.co.uk
W | www.stageone.co.uk

THIS DRAWING IS THE COPYRIGHT OF STAGE ONE CREATIVE SERVICES LTD AND SHALL NOT BE DISCLOSED OR COPIED WITHOUT WRITTEN CONSENT

CLIENT: NEWSUBSTANCE LTD	PROJECT: CO-OP LIVE ANTENNA
GROUP: AA - MANUFACTURED ITEMS	
SUBGROUP: 01 - LIGHT ANTENNA	

DRAWING TYPE	DRAWN BY	PROJECTION	DRAWING SIZE	DRAWING SCALE
SP	ON		A3	1 : 5

DRAWING TITLE: W1 - P3 - BLUE - ACCESS	SHEET No. 1 / 1
DRAWING NUMBER: ANT0424-AA01-0464	REVISION A,1

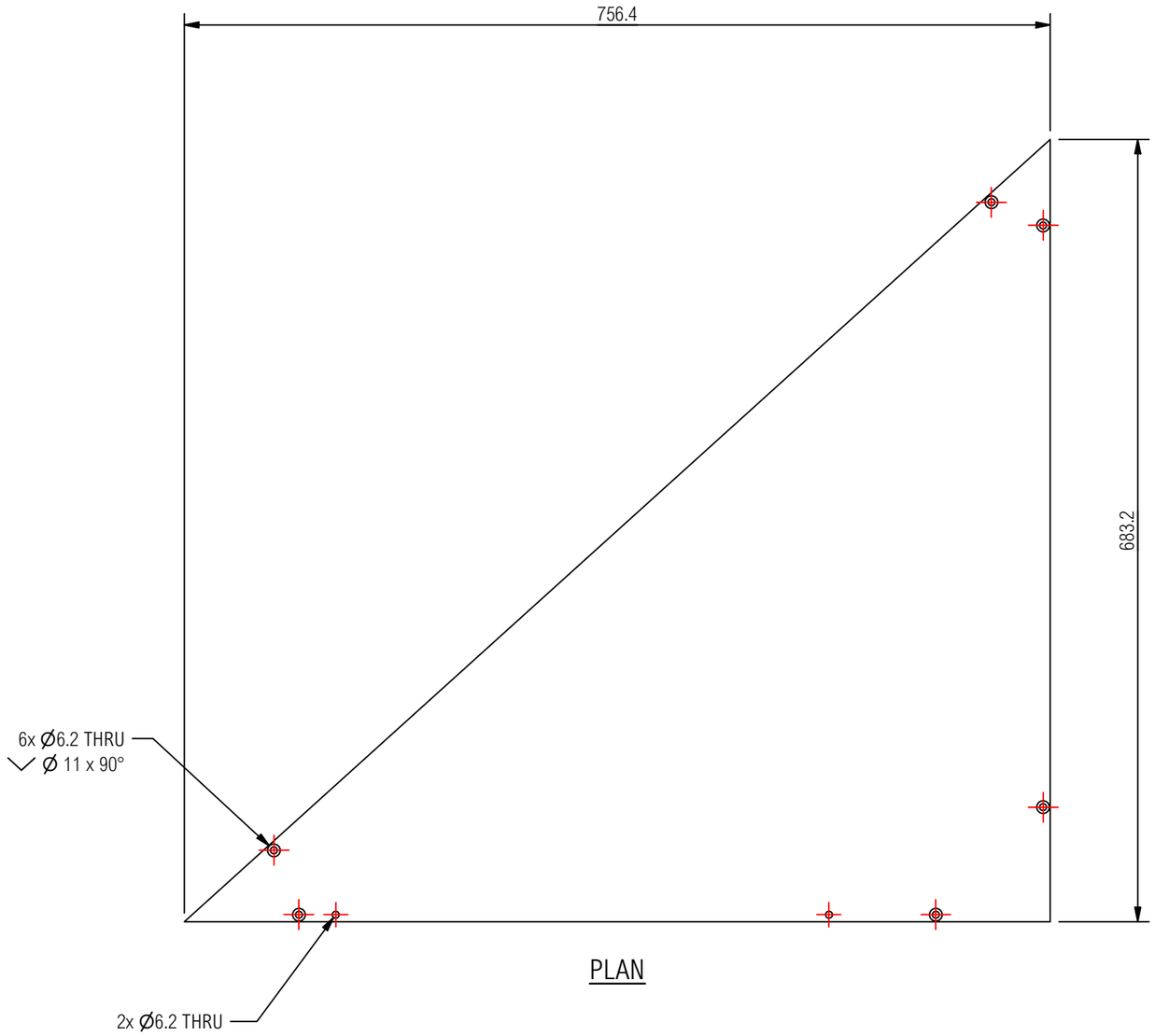

PLAN

GENERAL NOTES

1. IF IN DOUBT - ASK!
2. ALL DIMENSIONS ARE IN mm UNLESS STATED OTHERWISE.
3. ALL LINEAR DIMENSIONS TO BE ± 1mm UNLESS STATED OTHERWISE.
4. ALL HOLE DIMENSIONS TO BE ± 0.25mm UNLESS STATED OTHERWISE.

CONSTRUCTOR

BUILD PROCESS 1: CNC - 3-AXIS	BUILD PROCESS 2:	BUILD No: 14
BUILD PROCESS 3:	BUILD PROCESS 4:	
BUILD PROCESS 5:	BUILD PROCESS 6:	
BUILD PROCESS 7:	BUILD PROCESS 8:	BUILD QTY: 2
MATERIAL: PERSPEX S2 7T1F - AZURE BLUE - 8 mm	WEIGHT: 2 kg	
FINISH: PERSPEX S2 7T1F - AZURE BLUE	FINISH QUALITY: HIGH	

REVISION HISTORY

REV	DESCRIPTION	DRN	DATE
A	ISSUED FOR MANUFACTURING		

T | +44 (0)1423 358 001
E | sales@stageone.co.uk
W | www.stageone.co.uk

THIS DRAWING IS THE COPYRIGHT OF STAGE ONE CREATIVE SERVICES LTD AND SHALL NOT BE DISCLOSED OR COPIED WITHOUT WRITTEN CONSENT

CLIENT: NEWSUBSTANCE LTD

PROJECT: CO-OP LIVE ANTENNA

GROUP: AA - MANUFACTURED ITEMS

SUBGROUP: 01 - LIGHT ANTENNA

DRAWING TYPE	DRAWN BY	PROJECTION	DRAWING SIZE	DRAWING SCALE
SP	ON		A3	1 : 5

DRAWING TITLE: W1 - P1 - BLUE - ACCESS

SHEET No. 1 / 1

DRAWING NUMBER: ANT0424-AA01-0465

REVISION A,1

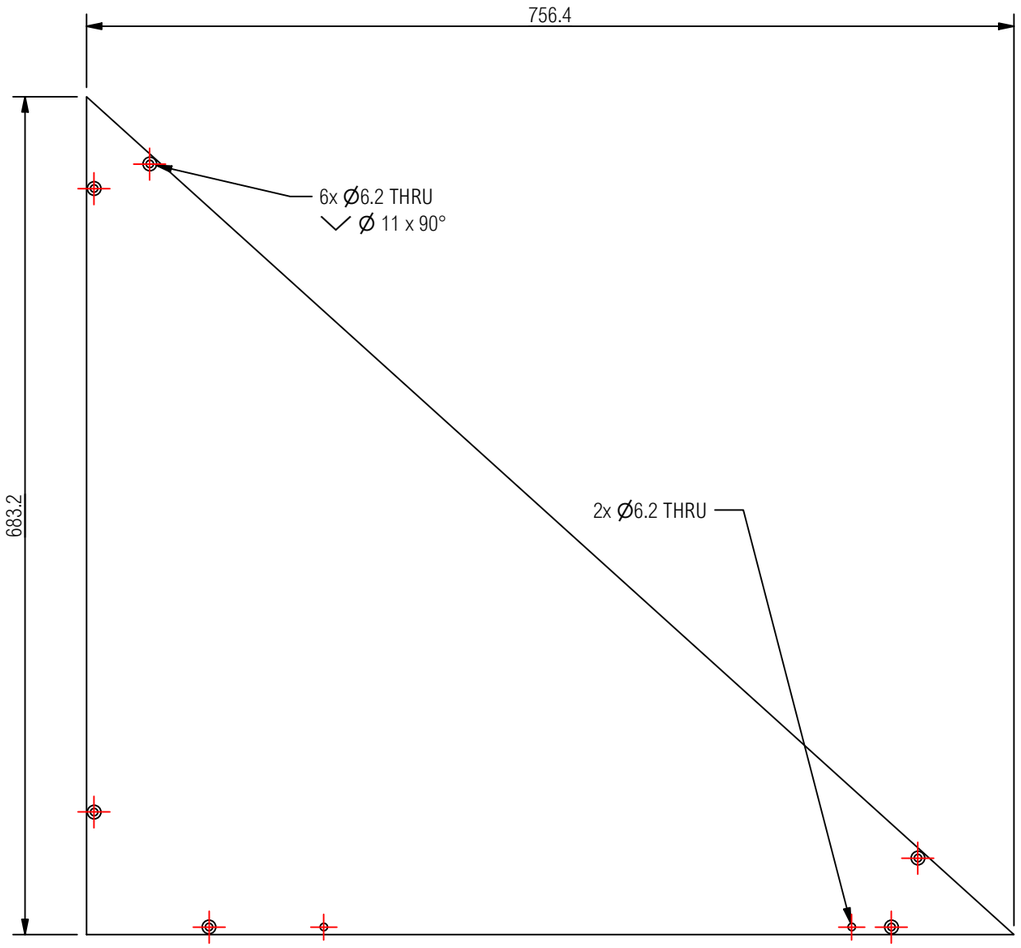

PLAN

GENERAL NOTES

1. IF IN DOUBT - ASK!
2. ALL DIMENSIONS ARE IN mm UNLESS STATED OTHERWISE.
3. ALL LINEAR DIMENSIONS TO BE ± 1mm UNLESS STATED OTHERWISE.
4. ALL HOLE DIMENSIONS TO BE ± 0.25mm UNLESS STATED OTHERWISE.

CONSTRUCTOR

BUILD PROCESS 1: CNC - 3-AXIS	BUILD PROCESS 2:		BUILD No: 13
BUILD PROCESS 3:	BUILD PROCESS 4:		
BUILD PROCESS 5:	BUILD PROCESS 6:		
BUILD PROCESS 7:	BUILD PROCESS 8:		BUILD QTY: 2
MATERIAL: PERSPEX S2 8T14 - VIOLET HEATHER - 8 mm		WEIGHT: 2 kg	
FINISH: PERSPEX S2 8T14 - VIOLET HEATHER		FINISH QUALITY: HIGH	

REVISION HISTORY

REV	DESCRIPTION	DRN	DATE
A,1	ISSUED FOR MANUFACTURING	ON	27/02/2024

T | +44 (0)1423 358 001
E | sales@stageone.co.uk
W | www.stageone.co.uk

THIS DRAWING IS THE COPYRIGHT OF STAGE ONE CREATIVE SERVICES LTD AND SHALL NOT BE DISCLOSED OR COPIED WITHOUT WRITTEN CONSENT

CLIENT: NEWSUBSTANCE LTD	PROJECT: CO-OP LIVE ANTENNA
GROUP: AA - MANUFACTURED ITEMS	
SUBGROUP: 01 - LIGHT ANTENNA	

DRAWING TYPE	DRAWN BY	PROJECTION	DRAWING SIZE	DRAWING SCALE
SP	ON		A3	1 : 5

DRAWING TITLE: W1 - P1 - PINK- ACCESS	SHEET No. 1 / 1
DRAWING NUMBER: ANT0424-AA01-0467	REVISION A,1

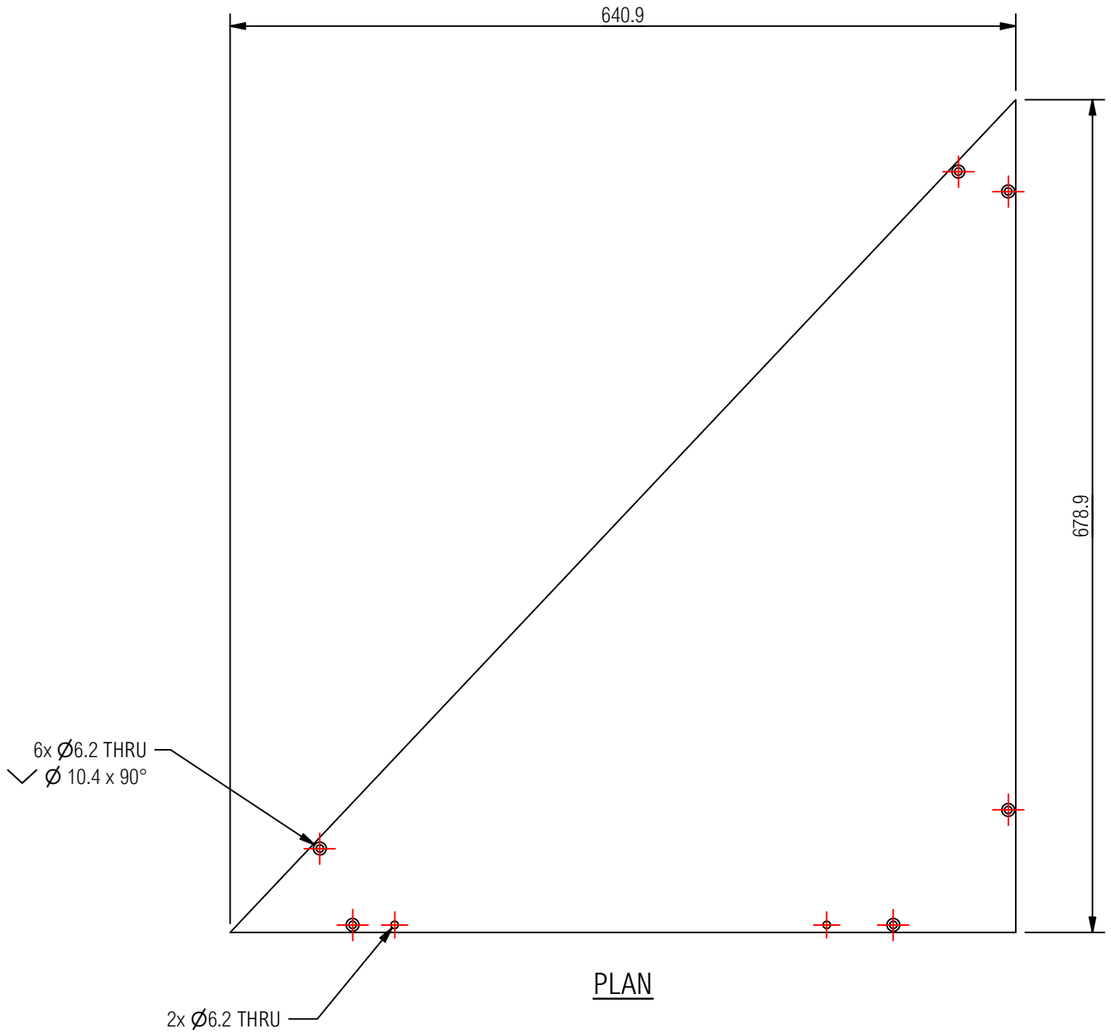

PLAN

GENERAL NOTES

1. IF IN DOUBT - ASK!
2. ALL DIMENSIONS ARE IN mm UNLESS STATED OTHERWISE.
3. ALL LINEAR DIMENSIONS TO BE ± 1mm UNLESS STATED OTHERWISE.
4. ALL HOLE DIMENSIONS TO BE ± 0.25mm UNLESS STATED OTHERWISE.

CONSTRUCTOR

BUILD PROCESS 1: CNC - 3-AXIS	BUILD PROCESS 2:	BUILD No: 12
BUILD PROCESS 3:	BUILD PROCESS 4:	
BUILD PROCESS 5:	BUILD PROCESS 6:	
BUILD PROCESS 7:	BUILD PROCESS 8:	BUILD QTY: 2
MATERIAL: PERSPEX S2 6T7A - JADE GREEN - 8 mm	WEIGHT: 2 kg	
FINISH: PERSPEX S2 6T7A - JADE GREEN	FINISH QUALITY: HIGH	

REVISION HISTORY

REV	DESCRIPTION	DRN	DATE
A,1	ISSUED FOR MANUFACTURING	ON	27/02/2024

T | +44 (0)1423 358 001
E | sales@stageone.co.uk
W | www.stageone.co.uk

THIS DRAWING IS THE COPYRIGHT OF STAGE ONE CREATIVE SERVICES LTD AND SHALL NOT BE DISCLOSED OR COPIED WITHOUT WRITTEN CONSENT

CLIENT: NEWSUBSTANCE LTD

PROJECT: CO-OP LIVE ANTENNA

GROUP: AA - MANUFACTURED ITEMS

SUBGROUP: 01 - LIGHT ANTENNA

DRAWING TYPE	DRAWN BY	PROJECTION	DRAWING SIZE	DRAWING SCALE
SP	ON		A3	1 : 5

DRAWING TITLE: W1 - P3 - GREEN - ACCESS

SHEET No. 1 / 1

DRAWING NUMBER: ANT0424-AA01-0468

REVISION A,1

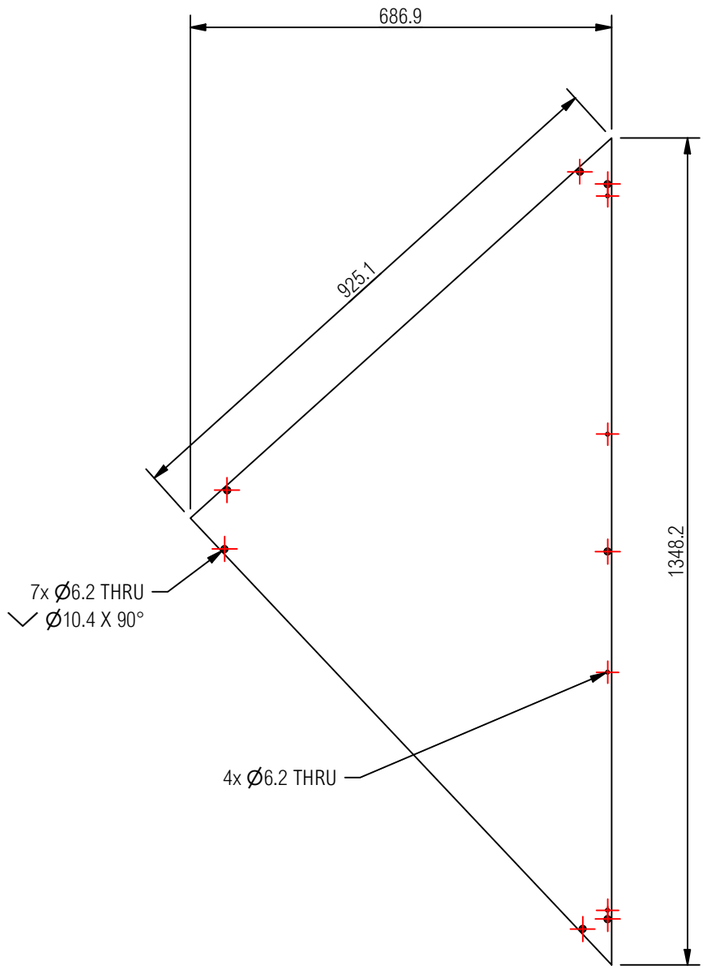

PLAN

GENERAL NOTES

1. IF IN DOUBT - ASK!
2. ALL DIMENSIONS ARE IN mm UNLESS STATED OTHERWISE.
3. ALL LINEAR DIMENSIONS TO BE ± 1mm UNLESS STATED OTHERWISE.
4. ALL HOLE DIMENSIONS TO BE ± 0.25mm UNLESS STATED OTHERWISE.

CONSTRUCTOR

BUILD PROCESS 1: CNC - 3-AXIS	BUILD PROCESS 2:	BUILD No: 11
BUILD PROCESS 3:	BUILD PROCESS 4:	
BUILD PROCESS 5:	BUILD PROCESS 6:	
BUILD PROCESS 7:	BUILD PROCESS 8:	BUILD QTY: 2
MATERIAL: PERSPEX S2 7T1F - AZURE BLUE - 8 mm	WEIGHT: 4 kg	
FINISH: PERSPEX S2 7T1F - AZURE BLUE	FINISH QUALITY: HIGH	

REVISION HISTORY

REV	DESCRIPTION	DRN	DATE
A,1	ISSUED FOR MANUFACTURING	ON	27/02/2024

T | +44 (0)1423 358 001
E | sales@stageone.co.uk
W | www.stageone.co.uk

THIS DRAWING IS THE COPYRIGHT OF STAGE ONE CREATIVE SERVICES LTD AND SHALL NOT BE DISCLOSED OR COPIED WITHOUT WRITTEN CONSENT

CLIENT: NEWSUBSTANCE LTD	PROJECT: CO-OP LIVE ANTENNA
GROUP: AA - MANUFACTURED ITEMS	
SUBGROUP: 01 - LIGHT ANTENNA	

DRAWING TYPE	DRAWN BY	PROJECTION	DRAWING SIZE	DRAWING SCALE
SP	ON		A3	1 : 10

DRAWING TITLE: W1 - P2 - BLUE- ACCESS	SHEET No. 1 / 1
DRAWING NUMBER: ANT0424-AA01-0469	REVISION A,1

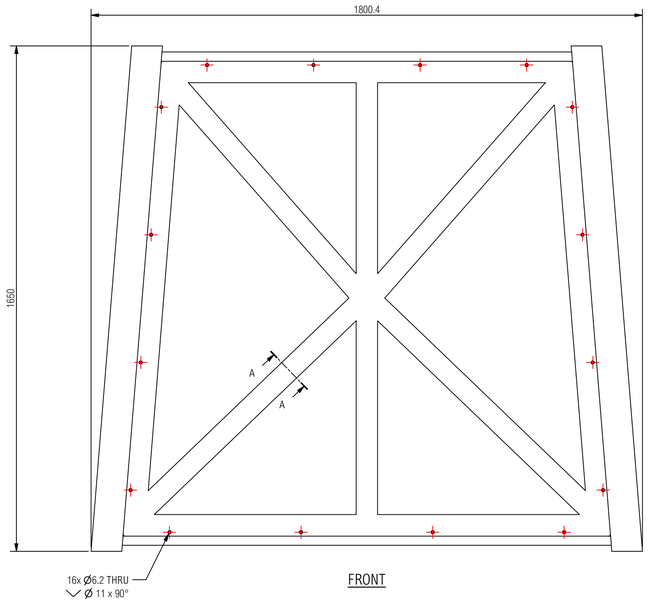

FRONT

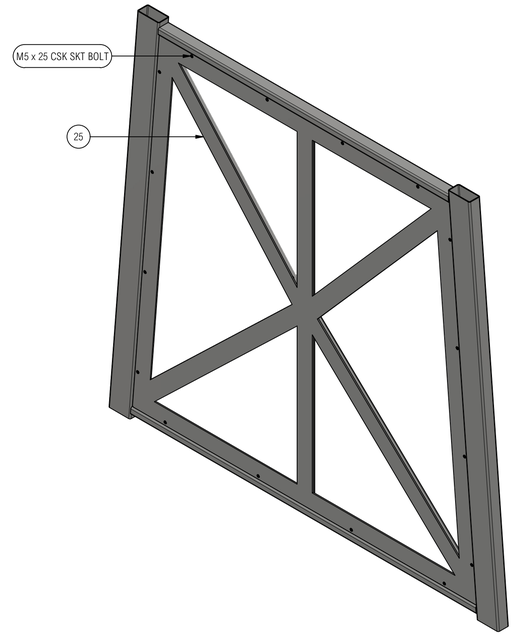

ISOMETRIC

BILL OF MATERIALS

ITEM	PART NUMBER	REV	DESCRIPTION	MATERIAL	CUT	QTY
1	ANT0424-EXTR-0070	A	PERSPX WINDOW B	PERSPEX - 8 mm	YES	1
2	ANT0424-EXTR-0071	A	PERSPX WINDOW C	PERSPEX - 8 mm	YES	1
3	ANT0424-EXTR-0073	A	PERSPX WINDOW A	PERSPEX - 8 mm	YES	1
4	ANT0424-EXTR-0062		FRAME MEMBER	100 x 50 x 3 RHS - MS S235 (CF)	YES	1
5	ANT0424-EXTR-0063		FRAME MEMBER	100 x 50 x 3 RHS - MS S235 (CF)	YES	1
6	ANT0424-EXTR-0075	A	FRAME MEMBER - L SECTION	30 x 30 x 2 SHS - MS S235 (CF)	YES	1
7	ANT0424-EXTR-0076	A	FRAME MEMBER - L SECTION	30 x 30 x 2 SHS - MS S235 (CF)	YES	1
8	ANT0424-EXTR-0077	A	FRAME MEMBER - L SECTION	30 x 30 x 2 SHS - MS S235 (CF)	YES	1
9	ANT0424-EXTR-0078	A	FRAME MEMBER - L SECTION	30 x 30 x 2 SHS - MS S235 (CF)	YES	1
10	ANT0424-EXTR-0079	A	FRAME MEMBER - L SECTION	30 x 30 x 2 SHS - MS S235 (CF)	YES	1
11	ANT0424-EXTR-0080	A	FRAME MEMBER - L SECTION	30 x 30 x 2 SHS - MS S235 (CF)	YES	1
12	ANT0424-EXTR-0081	A	FRAME MEMBER - L SECTION	30 x 30 x 2 SHS - MS S235 (CF)	YES	1
13	ANT0424-EXTR-0082	A	FRAME MEMBER - L SECTION	30 x 30 x 2 SHS - MS S235 (CF)	YES	1
14	ANT0424-EXTR-0083	A	FRAME MEMBER - L SECTION	30 x 30 x 2 SHS - MS S235 (CF)	YES	1
15	ANT0424-EXTR-0084	A	FRAME MEMBER - L SECTION	30 x 30 x 2 SHS - MS S235 (CF)	YES	1
16	ANT0424-EXTR-0085	A	FRAME MEMBER - L SECTION	30 x 30 x 2 SHS - MS S235 (CF)	YES	1
17	ANT0424-EXTR-0086	A	FRAME MEMBER - L SECTION	30 x 30 x 2 SHS - MS S235 (CF)	YES	1
18	ANT0424-EXTR-0064		FRAME MEMBER	30 x 30 x 3 SHS - MS S235 (CF)	YES	1
19	ANT0424-EXTR-0065		FRAME MEMBER	30 x 30 x 3 SHS - MS S235 (CF)	YES	1
20	ANT0424-EXTR-0066		FRAME MEMBER	30 x 30 x 3 SHS - MS S235 (CF)	YES	1
21	ANT0424-EXTR-0067		FRAME MEMBER	30 x 30 x 3 SHS - MS S235 (CF)	YES	1
22	ANT0424-EXTR-0068		FRAME MEMBER	30 x 30 x 3 SHS - MS S235 (CF)	YES	1
23	ANT0424-EXTR-0060		FRAME MEMBER	50 x 30 x 3 RHS - MS S235 (CF)	YES	1
24	ANT0424-EXTR-0061		FRAME MEMBER	50 x 30 x 3 RHS - MS S235 (CF)	YES	1
25	ANT0424-EXTR-0074	A	REMOVABLE PANEL	MS PLATE S275 - 5 mm	YES	1
26	M5 HEX NUT		M5 HEX NUT	AS SUPPLIED	NO	42
27	M5 x 20 CSK SKT BOLT		M5 x 20 CSK SKT BOLT	AS SUPPLIED	NO	19
28	M5 x 25 CSK SKT BOLT		M5 x 25 CSK SKT BOLT	AS SUPPLIED	NO	16

GENERAL NOTES

1. IF IN DOUBT - ASK!
2. ALL DIMENSIONS ARE IN mm UNLESS STATED OTHERWISE.
3. ALL LINEAR DIMENSIONS TO BE ± 1mm UNLESS STATED OTHERWISE.
4. ALL HOLE DIMENSIONS TO BE ± 0.25mm UNLESS STATED OTHERWISE.
5. USE WELD PROCEDURES WP01 TO WP18 WHERE APPLICABLE.
6. PART(S) REQUIRE COUNTERSUNK HOLES.
7. PERSPEX TO BE CUT ON THE LASER PLATE

DO NOT ETCH

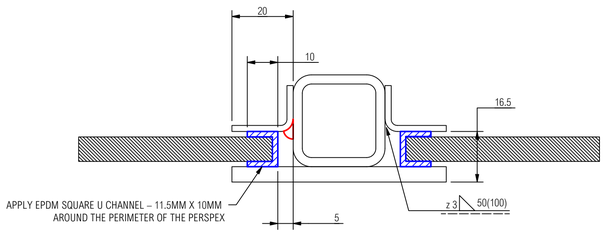

SECTION A - A

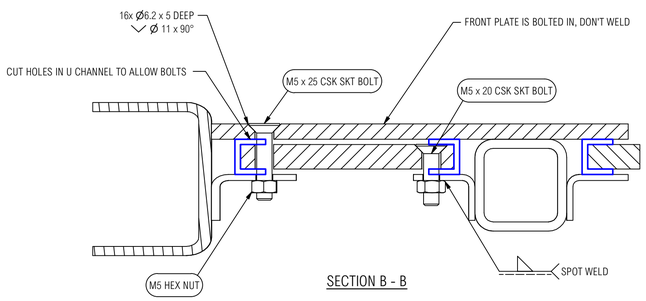

SECTION B - B

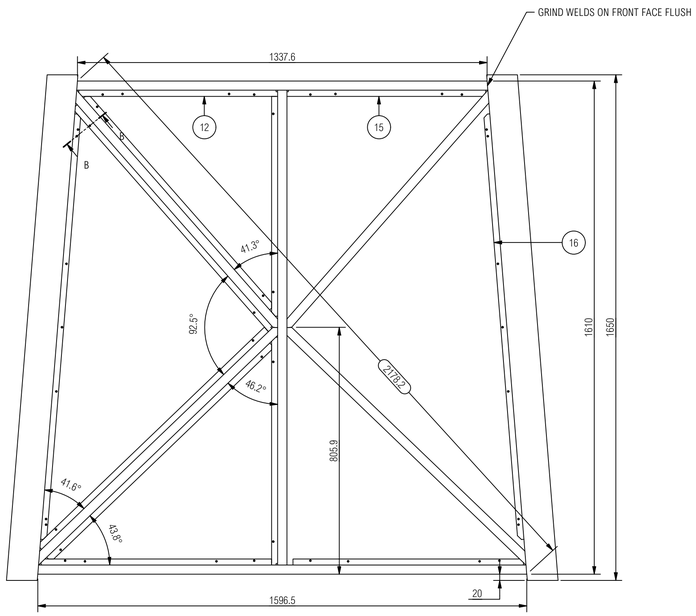

FRONT

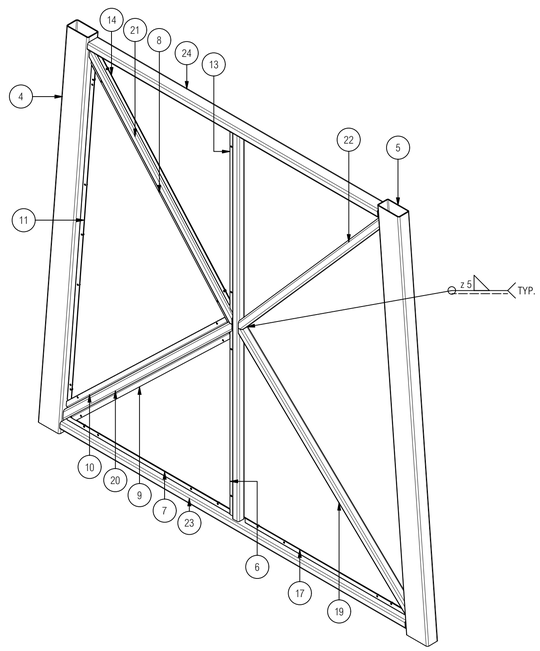

ISOMETRIC
FABRICATED FRAME

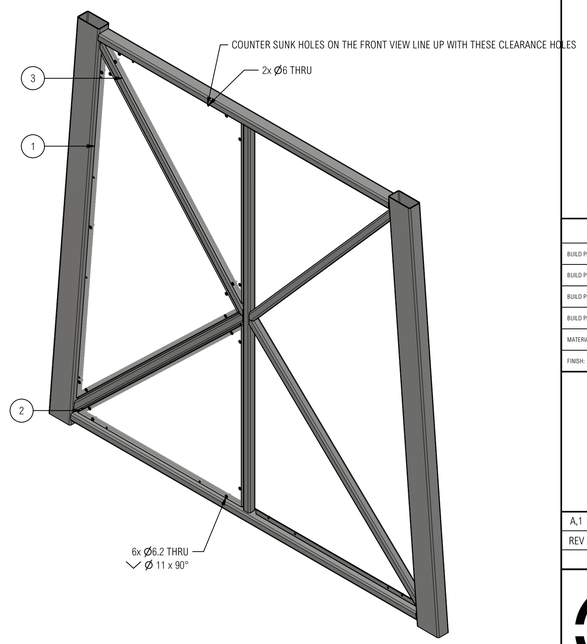

ISOMETRIC
FRONT PANEL REMOVED

CONSTRUCTOR

BUILD PROCESS 1:	LASER PLATE	BUILD PROCESS 2:	LASER TUBE	BUILD No: N/A
BUILD PROCESS 3:	METALWORK	BUILD PROCESS 4:	SUB-CONTRACT	
BUILD PROCESS 5:	WOODWORK	BUILD PROCESS 6:		
BUILD PROCESS 7:		BUILD PROCESS 8:		BUILD QTY: 1
MATERIAL:	RHS, SHS, MS PLATE AND PERSPEX	WEIGHT:	90 kg	
FINISH:	NO FINISH	FINISH QUALITY:	HIGH	

REVISION HISTORY

REV	DESCRIPTION	DRN	DATE
A,1	ISSUED FOR MANUFACTURING	ON	15/02/2024

T | +44 (0)1423 358 001
E | sales@stageone.co.uk
W | www.stageone.co.uk

THIS DRAWING IS THE COPYRIGHT OF STAGE ONE CREATIVE SERVICES LTD AND SHALL NOT BE DISCLOSED OR COPIED WITHOUT WRITTEN CONSENT

CLIENT:	NEWSUBSTANCE LTD
PROJECT:	CO-OP LIVE ANTENNA
GROUP:	EX - EXTRA
SUBGROUP:	TR - EXTRA
DRAWING TYPE	MF
DRAWN BY	ON
PROJECTION	
DRAWING SIZE	A1
DRAWING SCALE	1 : 10
DRAWING TITLE:	FRAME SAMPLE
SHEET No.	1 / 1
DRAWING NUMBER:	ANT0424-EXTR-0003
REVISION	A,1

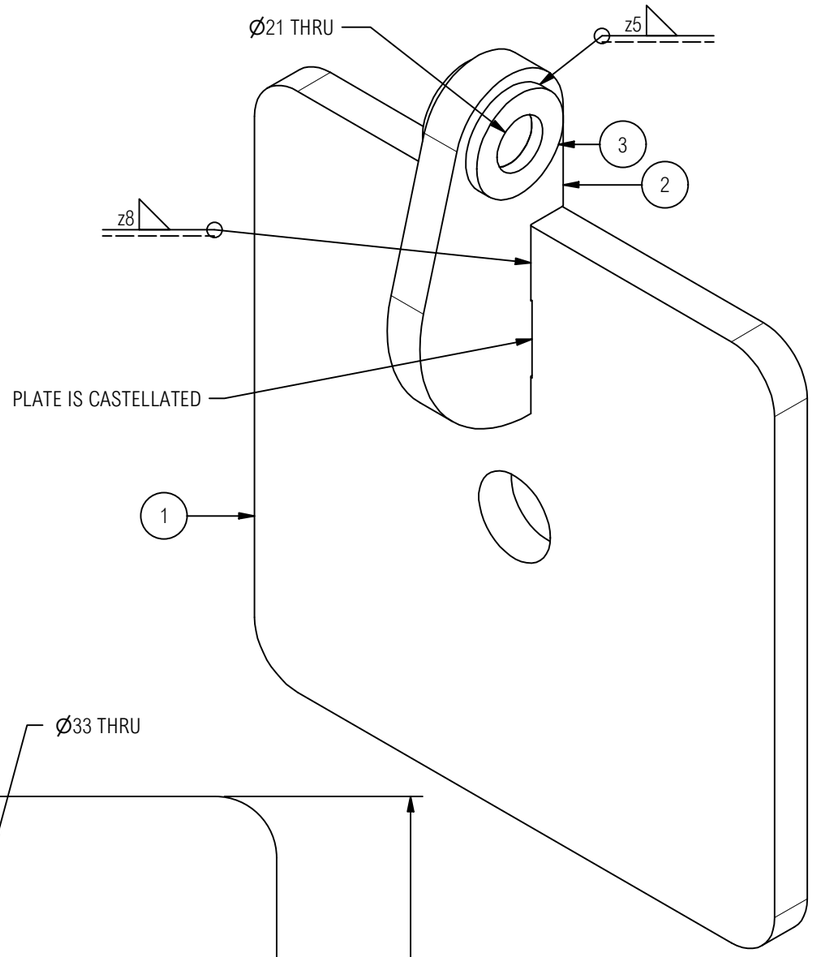

ISOMETRIC

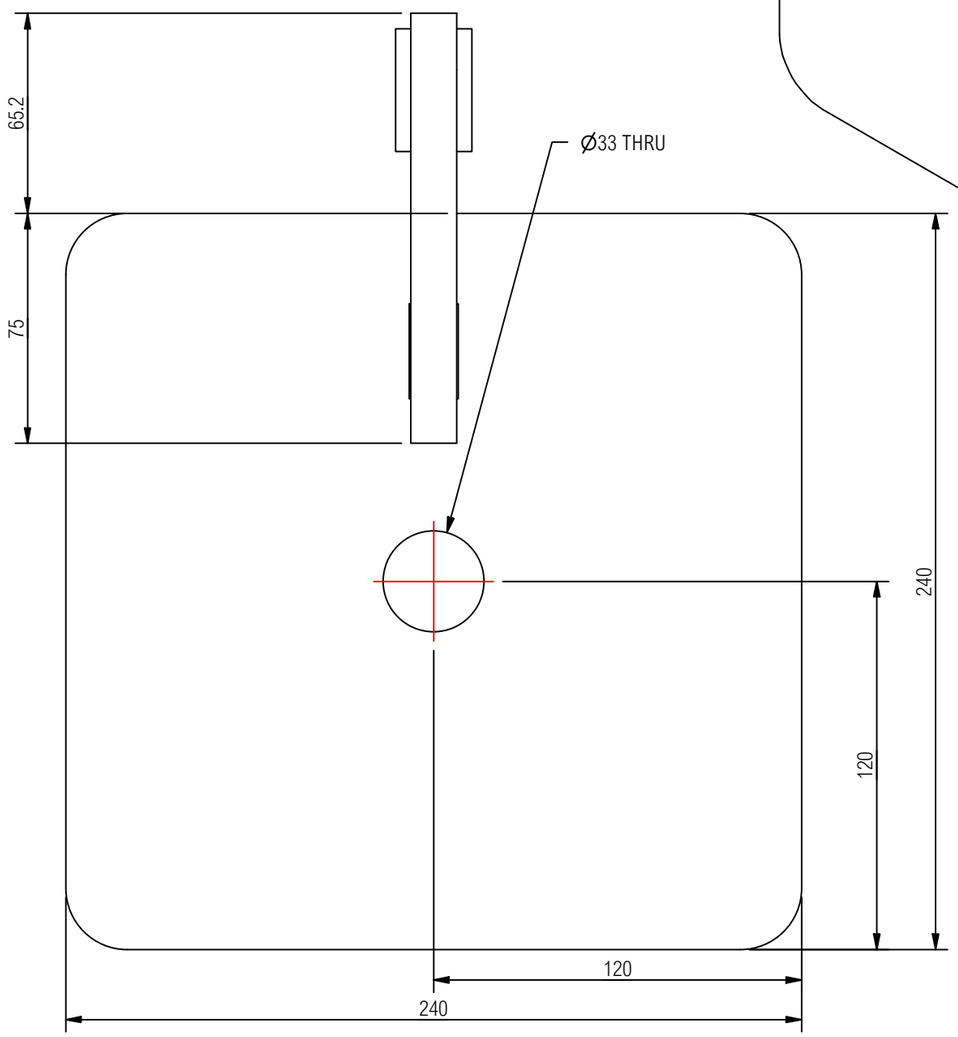

FRONT

BILL OF MATERIALS

ITEM	PART NUMBER	REV	DESCRIPTION	MATERIAL	CUT	QTY
1	ANT0424-EXTR-0130	A	BOLTING PLATE	MS PLATE S275 - 15 mm	YES	1
2	ANT0424-EXTR-0135	A	SHACKEL PLATE	MS PLATE S275 - 15 mm	YES	1
3	ANT0424-EXTR-0138	A	PADEYE	MS PLATE S275 - 5 mm	YES	2

GENERAL NOTES

1. IF IN DOUBT - ASK!
2. ALL DIMENSIONS ARE IN mm UNLESS STATED OTHERWISE.
3. ALL LINEAR DIMENSIONS TO BE ± 1mm UNLESS STATED OTHERWISE.
4. ALL HOLE DIMENSIONS TO BE ± 0.25mm UNLESS STATED OTHERWISE.
5. USE WELD PROCEDURES WP01 TO WP18 WHERE APPLICABLE.
6. SUBCONTRACT PROCESS IS FOR WELD TESTING

CONSTRUCTOR

BUILD PROCESS 1: LASER PLATE	BUILD PROCESS 2: METALWORK	BUILD No: 26	
BUILD PROCESS 3: SUB-CONTRACT	BUILD PROCESS 4: PAINTING		
BUILD PROCESS 5:	BUILD PROCESS 6:		
BUILD PROCESS 7:	BUILD PROCESS 8:	BUILD QTY: 2	
MATERIAL: MS PLATE WELDMENT	WEIGHT: 7 kg		
FINISH: PRIME - MATTE - BLACK	FINISH QUALITY: STANDARD		

REV	DESCRIPTION	DRN	DATE
A,1	ISSUED FOR MANUFACTURING	ON	28/02/2024

REVISION HISTORY

T | +44 (0)1423 358 001
E | sales@stageone.co.uk
W | www.stageone.co.uk

THIS DRAWING IS THE COPYRIGHT OF STAGE ONE CREATIVE SERVICES LTD AND SHALL NOT BE DISCLOSED OR COPIED WITHOUT WRITTEN CONSENT

CLIENT: NEWSUBSTANCE LTD		PROJECT: CO-OP LIVE ANTENNA		
GROUP: EX - EXTRA				
SUBGROUP: TR - EXTRA				
DRAWING TYPE: MF	DRAWN BY: ON	PROJECTION	DRAWING SIZE: A3	DRAWING SCALE: 1 : 2
DRAWING TITLE: LIFTING POINT A				SHEET No. 1 / 1
DRAWING NUMBER: ANT0424-EXTR-0131				REVISION A,1

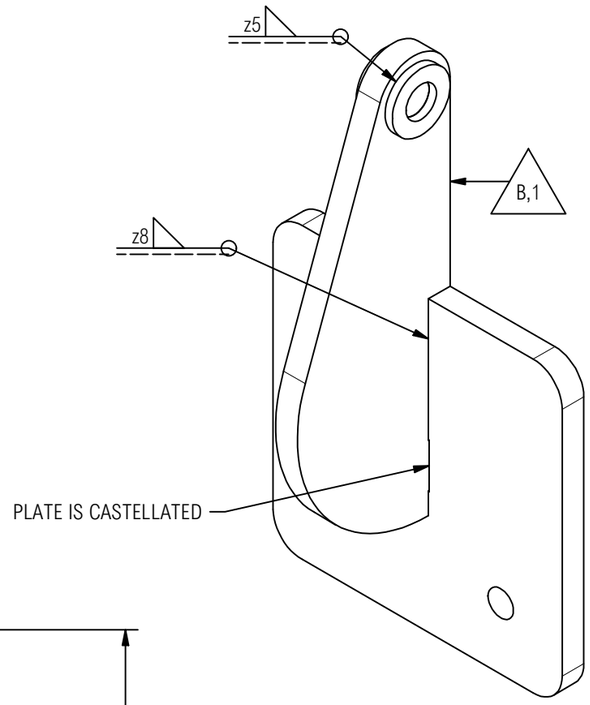

ISOMETRIC

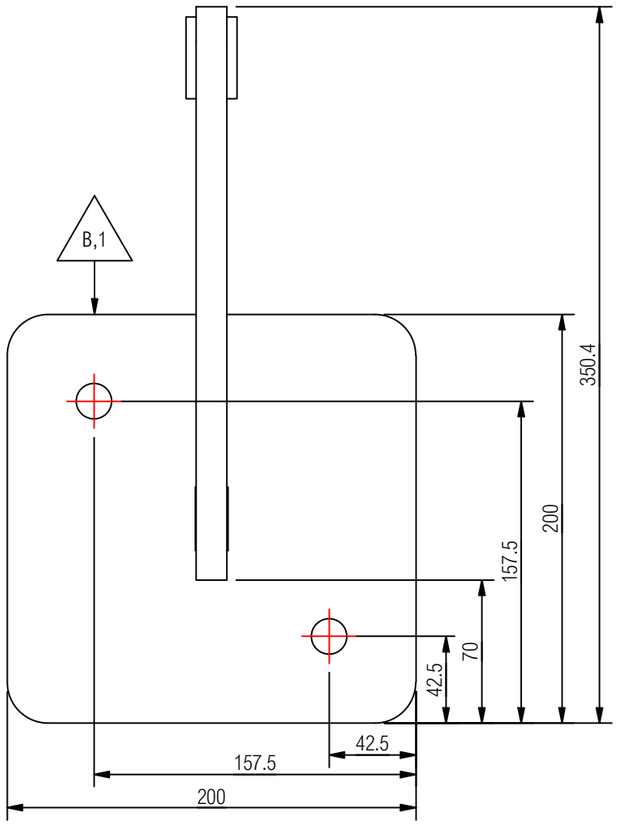

FRONT

BILL OF MATERIALS

ITEM	PART NUMBER	REV	DESCRIPTION	MATERIAL	CUT	QTY
1	ANT0424-EXTR-0134	B	BOLTING PLATE	MS PLATE S275 - 15 mm	YES	1
2	ANT0424-EXTR-0132	B	SHACKEL PLATE	MS PLATE S275 - 15 mm	YES	1
3	ANT0424-EXTR-0138	A	PADEYE	MS PLATE S275 - 5 mm	YES	2

GENERAL NOTES

1. IF IN DOUBT - ASK!
2. ALL DIMENSIONS ARE IN mm UNLESS STATED OTHERWISE.
3. ALL LINEAR DIMENSIONS TO BE ± 1mm UNLESS STATED OTHERWISE.
4. ALL HOLE DIMENSIONS TO BE ± 0.25mm UNLESS STATED OTHERWISE.
5. USE WELD PROCEDURES WP01 TO WP18 WHERE APPLICABLE.
6. SUBCONTRACT PROCESS IS FOR WELD TESTING

CONSTRUCTOR

BUILD PROCESS 1:	LASER PLATE	BUILD PROCESS 2:	METALWORK	BUILD No: 27
BUILD PROCESS 3:	SUB-CONTRACT	BUILD PROCESS 4:	PAINTING	
BUILD PROCESS 5:		BUILD PROCESS 6:		
BUILD PROCESS 7:		BUILD PROCESS 8:		BUILD QTY: 2
MATERIAL:	MS PLATE WELDMENT	WEIGHT:	7 kg	
FINISH:	PRIME - MATTE - BLACK	FINISH QUALITY:	STANDARD	

REVISION HISTORY

REV	DESCRIPTION	DRN	DATE
B,1	ALL PARTS TO BE RE CUT TO SUIT NEW DESIGN	ON	13/03/2024
A,1	ISSUED FOR MANUFACTURING	ON	28/02/2024

T | +44 (0)1423 358 001
E | sales@stageone.co.uk
W | www.stageone.co.uk

THIS DRAWING IS THE COPYRIGHT OF STAGE ONE CREATIVE SERVICES LTD AND SHALL NOT BE DISCLOSED OR COPIED WITHOUT WRITTEN CONSENT

CLIENT:	NEWSUBSTANCE LTD
PROJECT:	CO-OP LIVE ANTENNA
GROUP:	EX - EXTRA
SUBGROUP:	TR - EXTRA
DRAWING TYPE	MF
DRAWN BY	ON
PROJECTION	
DRAWING SIZE	A3
DRAWING SCALE	1 : 3
DRAWING TITLE:	LIFTING POINT B
SHEET No.	1 / 1
DRAWING NUMBER:	ANT0424-EXTR-0136
REVISION	B,1

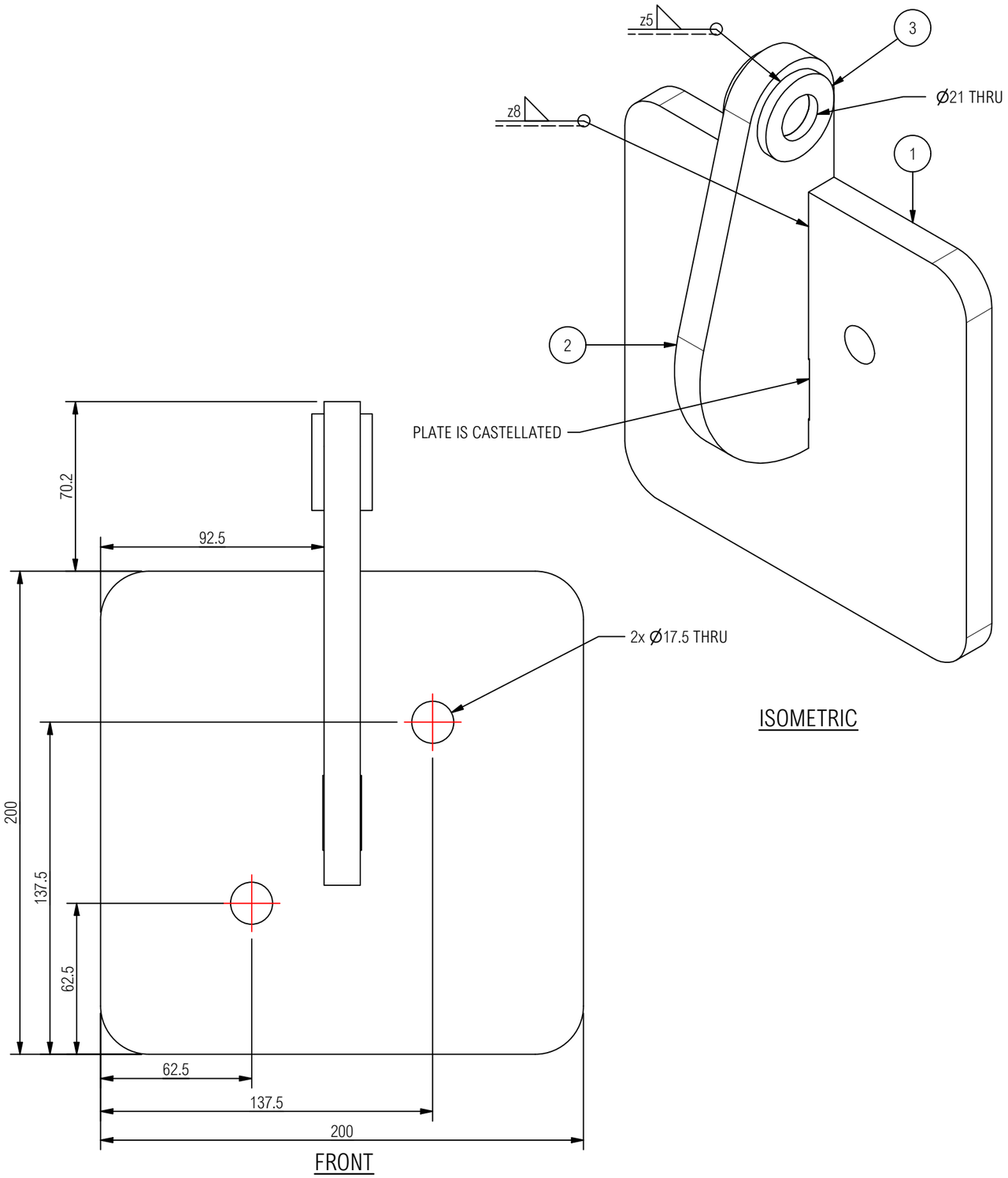

BILL OF MATERIALS

ITEM	PART NUMBER	REV	DESCRIPTION	MATERIAL	CUT	QTY
1	ANT0424-EXTR-0134	A	BOLTING PLATE	MS PLATE S275 - 15 mm	YES	1
2	ANT0424-EXTR-0132	A	SHACKEL PLATE	MS PLATE S275 - 15 mm	YES	1
3	ANT0424-EXTR-0138	A	PADEYE	MS PLATE S275 - 5 mm	YES	2

GENERAL NOTES

1. IF IN DOUBT - ASK!
2. ALL DIMENSIONS ARE IN mm UNLESS STATED OTHERWISE.
3. ALL LINEAR DIMENSIONS TO BE ± 1mm UNLESS STATED OTHERWISE.
4. ALL HOLE DIMENSIONS TO BE ± 0.25mm UNLESS STATED OTHERWISE.
5. USE WELD PROCEDURES WP01 TO WP18 WHERE APPLICABLE.
6. SUBCONTRACT PROCESS IS FOR WELD TESTING

CONSTRUCTOR

BUILD PROCESS 1:	LASER PLATE	BUILD PROCESS 2:	METALWORK	BUILD No: 28
BUILD PROCESS 3:	SUB-CONTRACT	BUILD PROCESS 4:	PAINTING	
BUILD PROCESS 5:		BUILD PROCESS 6:		
BUILD PROCESS 7:		BUILD PROCESS 8:		BUILD QTY: 2
MATERIAL:	MS PLATE WELDMENT	WEIGHT:	6 kg	
FINISH:	PRIME - MATTE - BLACK	FINISH QUALITY:	STANDARD	

REVISION HISTORY

REV	DESCRIPTION	DRN	DATE
A,1	ISSUED FOR MANUFACTURING	ON	28/02/2024

T | +44 (0)1423 358 001
E | sales@stageone.co.uk
W | www.stageone.co.uk

THIS DRAWING IS THE COPYRIGHT OF STAGE ONE CREATIVE SERVICES LTD AND SHALL NOT BE DISCLOSED OR COPIED WITHOUT WRITTEN CONSENT

CLIENT:	NEWSUBSTANCE LTD
PROJECT:	CO-OP LIVE ANTENNA
GROUP:	EX - EXTRA
SUBGROUP:	TR - EXTRA
DRAWING TYPE	MF
DRAWN BY	ON
PROJECTION	
DRAWING SIZE	A3
DRAWING SCALE	1 : 2
DRAWING TITLE:	LIFTING POINT C
SHEET No.	1 / 1
DRAWING NUMBER:	ANT0424-EXTR-0137
REVISION	A,1

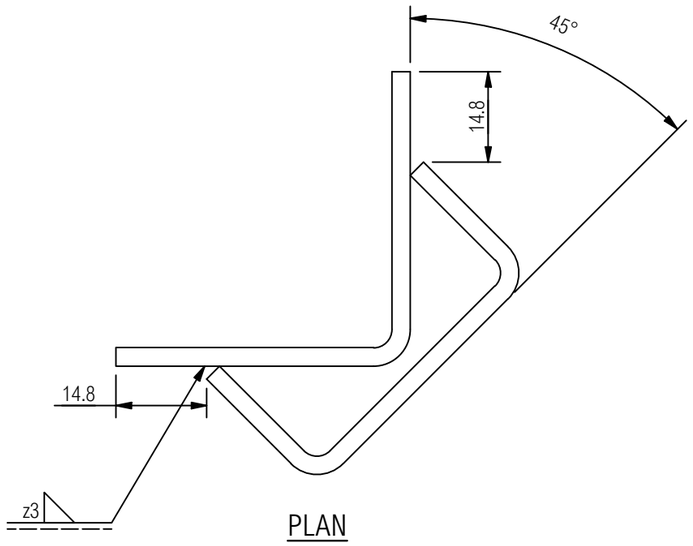

PLAN

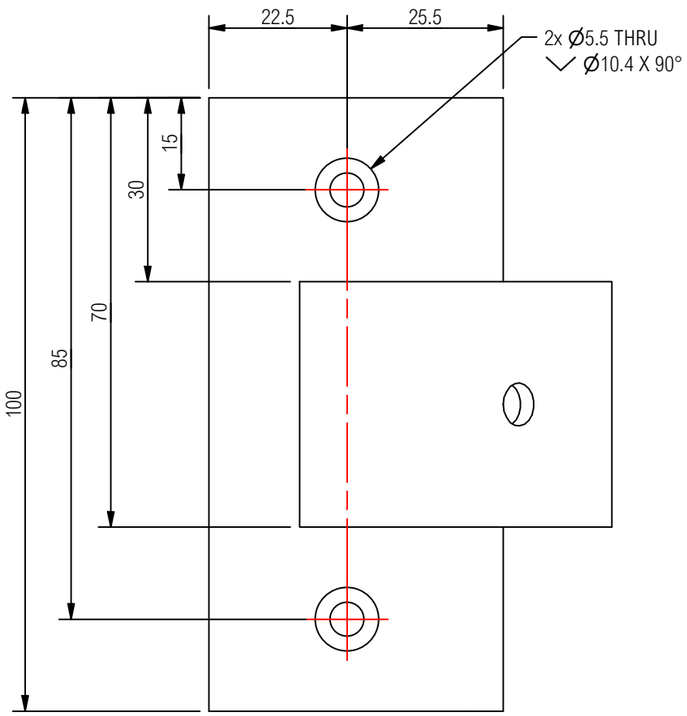

FRONT

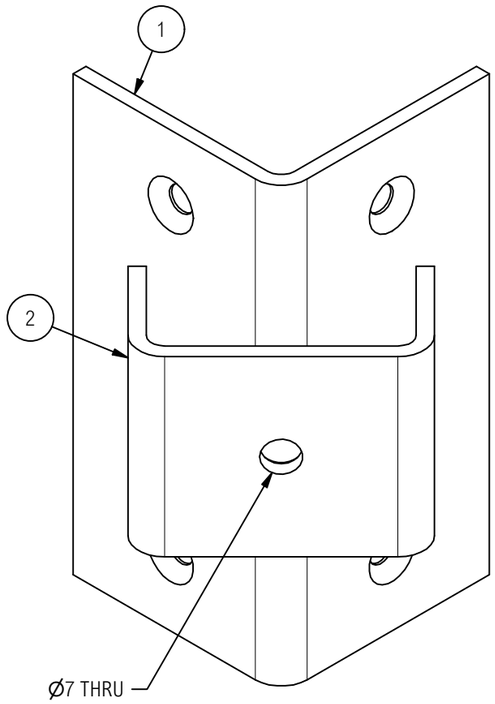

ISOMETRIC

BILL OF MATERIALS

ITEM	PART NUMBER	REV	DESCRIPTION	MATERIAL	CUT	QTY
1	ANT0424-EXTR-0149		FRAME MEMBER	100 x 100 x 3 SHS - MS S355 (CF)	YES	1
2	ANT0424-EXTR-0148		FRAME MEMBER	50 x 50 x 3 SHS - MS S355 (CF)	YES	1

GENERAL NOTES

DO NOT ETCH

1. IF IN DOUBT - ASK!
2. ALL DIMENSIONS ARE IN mm UNLESS STATED OTHERWISE.
3. ALL LINEAR DIMENSIONS TO BE ± 1mm UNLESS STATED OTHERWISE.
4. ALL HOLE DIMENSIONS TO BE ± 0.25mm UNLESS STATED OTHERWISE.
5. USE WELD PROCEDURES WP01 TO WP18 WHERE APPLICABLE.
6. PAINTING PROCESS SUBCONTRACTED OUT

CONSTRUCTOR

BUILD PROCESS 1:	LASER TUBE	BUILD PROCESS 2:	METALWORK
BUILD PROCESS 3:	SUB-CONTRACT	BUILD PROCESS 4:	
MATERIAL:	SHS WELDMENT	WEIGHT:	0 kg
FINISH:	PAINTED PSX 700 RAL 9003 (SIGNAL WHITE)	FINISH QUALITY:	STANDARD

BUILD No: 29

BUILD QTY: 60

REV	DESCRIPTION	DRN	DATE
A	ISSUED FOR MANUFACTURING		

REVISION HISTORY

T | +44 (0)1423 358 001
E | sales@stageone.co.uk
W | www.stageone.co.uk

THIS DRAWING IS THE COPYRIGHT OF STAGE ONE CREATIVE SERVICES LTD AND SHALL NOT BE DISCLOSED OR COPIED WITHOUT WRITTEN CONSENT

CLIENT: NEWSUBSTANCE LTD

PROJECT: CO-OP LIVE ANTENNA

GROUP: EX - EXTRA

SUBGROUP: TR - EXTRA

DRAWING TYPE	DRAWN BY	PROJECTION	DRAWING SIZE	DRAWING SCALE
MF	ON		A3	1 : 1

DRAWING TITLE: LED MOUNTING BRACKET

SHEET No. 1 / 1

DRAWING NUMBER: ANT0424-EXTR-0145

REVISION A,1

Structural Member Utilisation

COO0424 – Co-op Live Sculptures

Analysis Models – Member Utilisations

Rev. 01

Date: 14/03/2024

INTRODUCTION

This document summarises the design check output for each analysis model created by Stage One. For each sculpture it highlights the utilisation ratio of each steel member, with regards to its strength capacity, and the maximum stresses induced from applied loading combinations. All loading combinations and design checks are in adherence to the following codes;

- BS EN 1990 Eurocode 0 – Basis of Structural Design
- BS EN 1991 Eurocode 1 – Actions on Structures
- BS EN 1993-1:2005/NA:2008 Eurocode 3 – Design of Steel Structures

Frames have been checked for all anticipated live loads, snow loads and wind loading.

Wind loading has been derived locally to the installation sites of each sculpture. This has been found to be a maximum design wind speed of 28.8 m/s.

All members and steel plate elements have been found to pass strength checks and comply with Eurocode parameters. Stage One can state they are safe and robust for their intended use. The full structural design reports are to issued at a later date.

ANTENNA

Steel member strength verification checks carried out in Autodesk Robot steel design module to BS EN 1993-1:2005/NA:2008. The figure below shows the utilisation ratios of each member of the frame.

All members pass, with the maximum utilisation ratio being 0.53.

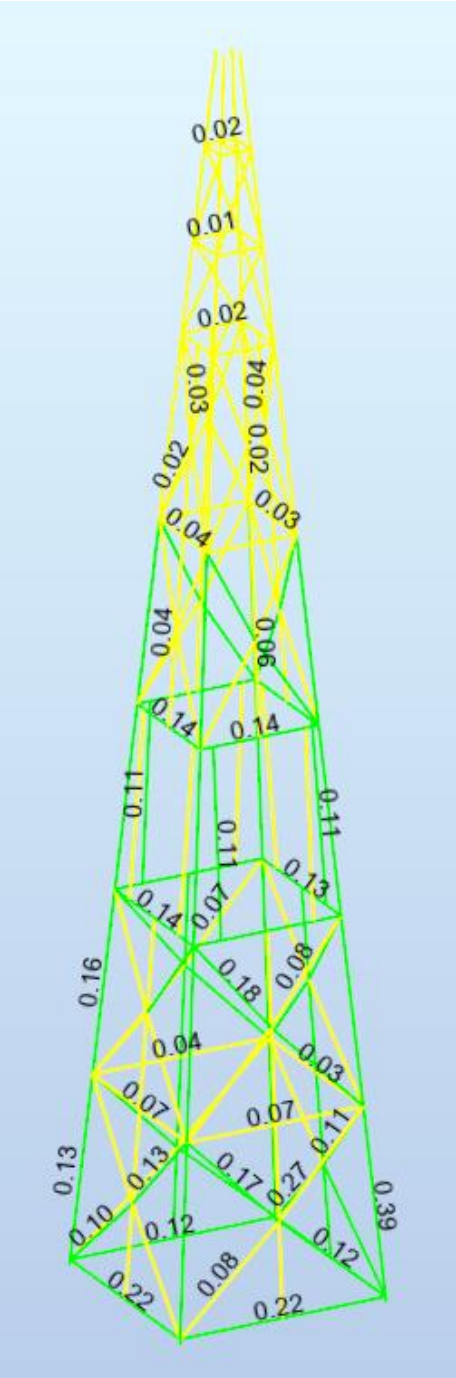

Calculation output for the most utilised (i.e. stressed) member follows.

CODE: *BS-EN 1993-1:2005/NA:2008/A1:2014, Eurocode 3: Design of steel structures.*
ANALYSIS TYPE: Member Verification

CODE GROUP:
MEMBER: 163 **POINT:** 1 **COORDINATE:** x = 0.00 L = 0.000 m

---

LOADS:
Governing Load Case: 30 ULS18 (1+2)*1.35+95*1.50

MATERIAL:
S235 fy = 235.00 MPa

SECTION PARAMETERS: SHSC 100x100x3

h=100 mm	gM0=1.00	gM1=1.00	
b=100 mm	Ay=570 mm2	Az=570 mm2	Ax=1140 mm2
tw=3 mm	Iy=1770000 mm4	Iz=1770000 mm4	Ix=2790000 mm4
tf=3 mm	Wply=41200 mm3	Wplz=41200 mm3	

INTERNAL FORCES AND CAPACITIES:

N,Ed = 47.68 kN	My,Ed = -2.03 kN*m	Mz,Ed = 2.08 kN*m	Vy,Ed = 1.83 kN
Nc,Rd = 267.90 kN	My,Ed,max = -2.03 kN*m	Mz,Ed,max = 2.08 kN*m	Vy,T,Rd = 77.30 kN
Nb,Rd = 253.73 kN	My,c,Rd = 9.68 kN*m	Mz,c,Rd = 9.68 kN*m	Vz,Ed = 1.74 kN
	MN,y,Rd = 9.68 kN*m	MN,z,Rd = 9.68 kN*m	Vz,T,Rd = 77.30 kN
			Tt,Ed = -0.00 kN*m
			Class of section = 1

LATERAL BUCKLING PARAMETERS:

BUCKLING PARAMETERS:

About y axis: About z axis:

Ly = 1.540 m	Lam_y = 0.42	Lz = 1.540 m	Lam_z = 0.42
Lcr,y = 1.540 m	Xy = 0.95	Lcr,z = 1.540 m	Xz = 0.95
Lamy = 39.08	kzy = 0.60	Lamz = 39.08	kzz = 1.00

VERIFICATION FORMULAS:

Section strength check:

N,Ed/Nc,Rd = 0.18 < 1.00 (6.2.4.(1))
My,Ed/MN,y,Rd = 0.21 < 1.00 (6.2.9.1.(2))
Mz,Ed/MN,z,Rd = 0.21 < 1.00 (6.2.9.1.(2))
(My,Ed/MN,y,Rd)^ 1.72 + (Mz,Ed/MN,z,Rd)^1.72 = 0.14 < 1.00 (6.2.9.1.(6))
Vy,Ed/Vy,T,Rd = 0.02 < 1.00 (6.2.6-7)
Vz,Ed/Vz,T,Rd = 0.02 < 1.00 (6.2.6-7)
Tau,ty,Ed/(fy/(sqrt(3)*gM0)) = 0.00 < 1.00 (6.2.6)
Tau,tz,Ed/(fy/(sqrt(3)*gM0)) = 0.00 < 1.00 (6.2.6)

Global stability check of member:

Lambda,y = 39.08 < Lambda,max = 210.00 Lambda,z = 39.08 < Lambda,max = 210.00 STABLE
N,Ed/(Xy*N,Rk/gM1) + kyy*My,Ed,max/(XLT*My,Rk/gM1) + kyz*Mz,Ed,max/(Mz,Rk/gM1) = 0.53 < 1.00 (6.3.3.(4))
N,Ed/(Xz*N,Rk/gM1) + kzy*My,Ed,max/(XLT*My,Rk/gM1) + kzz*Mz,Ed,max/(Mz,Rk/gM1) = 0.53 < 1.00 (6.3.3.(4))

Section OK !!!

Using Autodesk Robot 'Structure stress analysis' function, the model has been run for the worst-case loading combination to obtain visual stress diagrams on rendered models. These indicate how stressed the materials are.

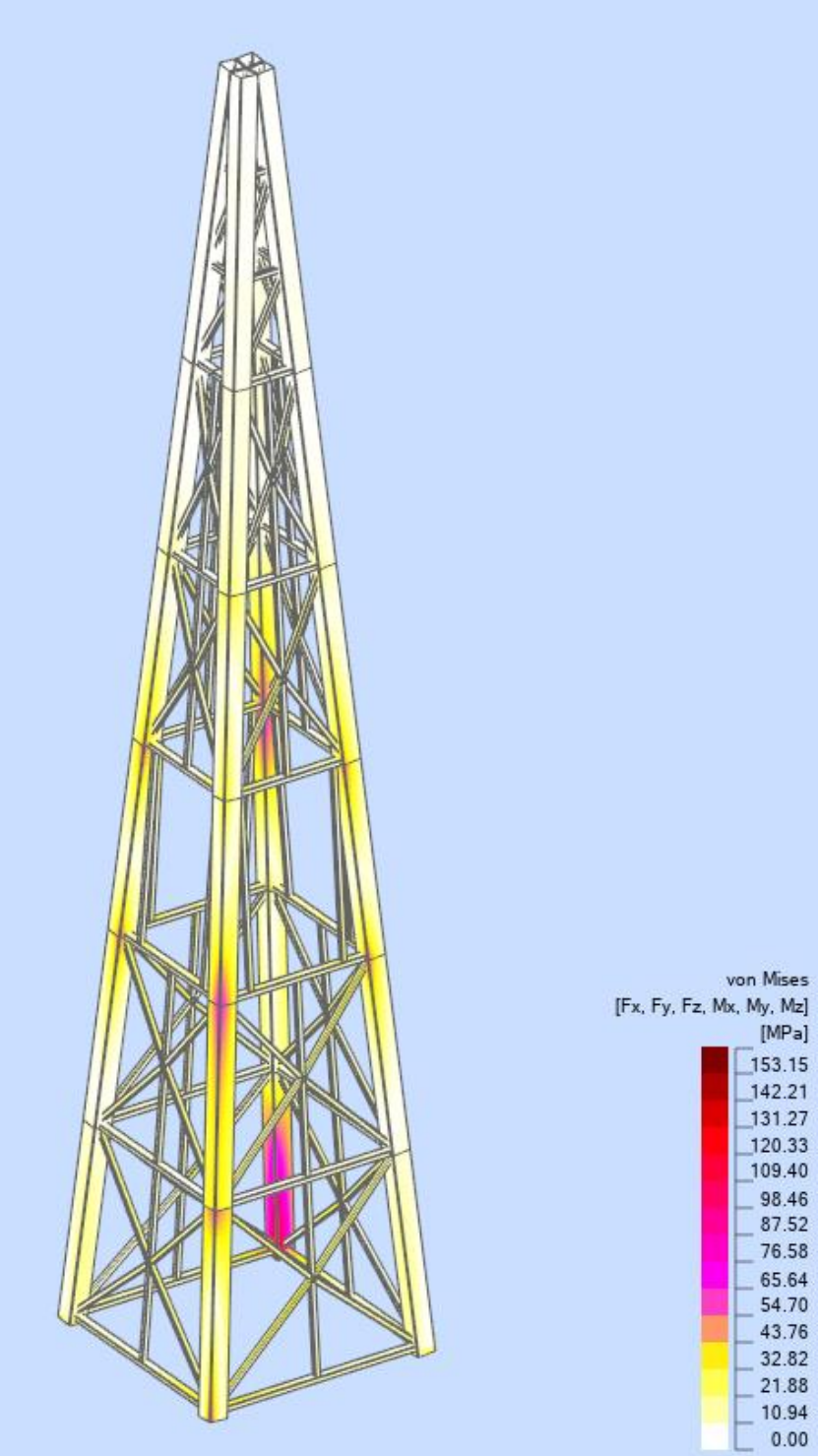

Max. peak stress recorded is 153.15 N/mm^2. This is below the yield strength of the material (235 N/mm^2), therefore frame is OK.

Foundation Design Schematic

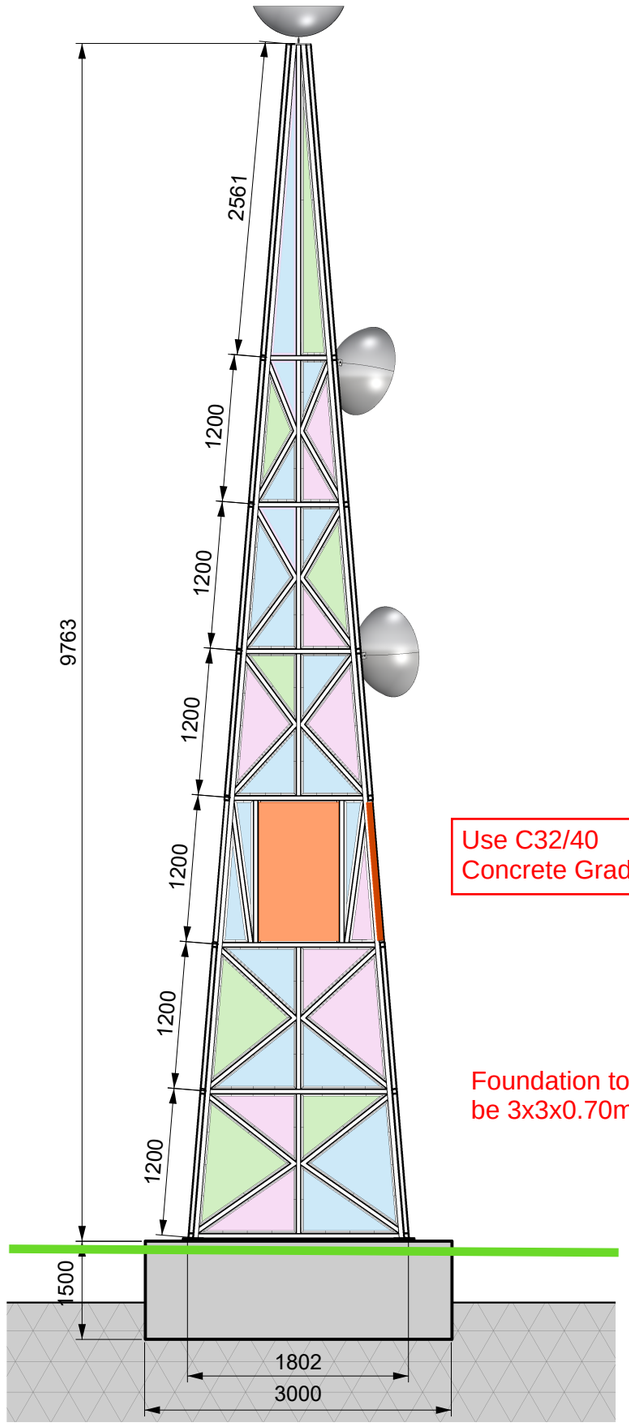

SECTION A - 1:50

Use C32/40
Concrete Grade

Foundation to
be 3x3x0.70m

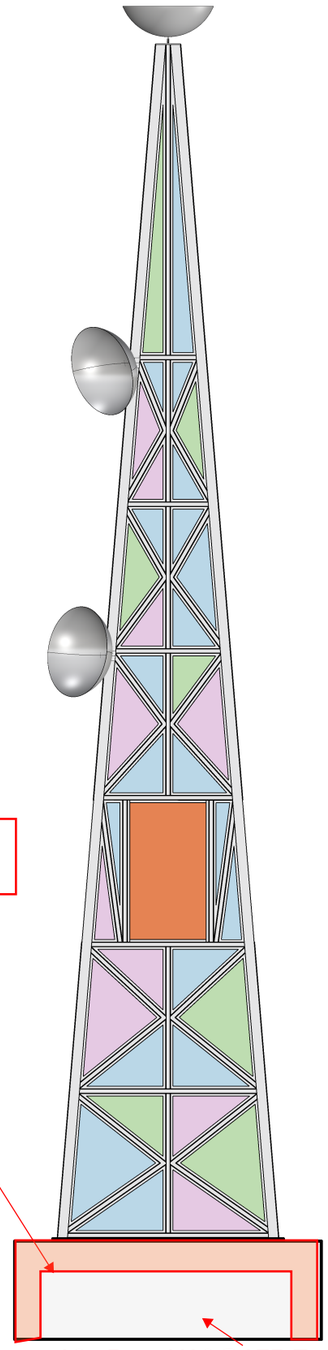

18x Bars H16@175 Each
Direction. Bar length to be
2880mm

FRONT ELEVATION - 1:50

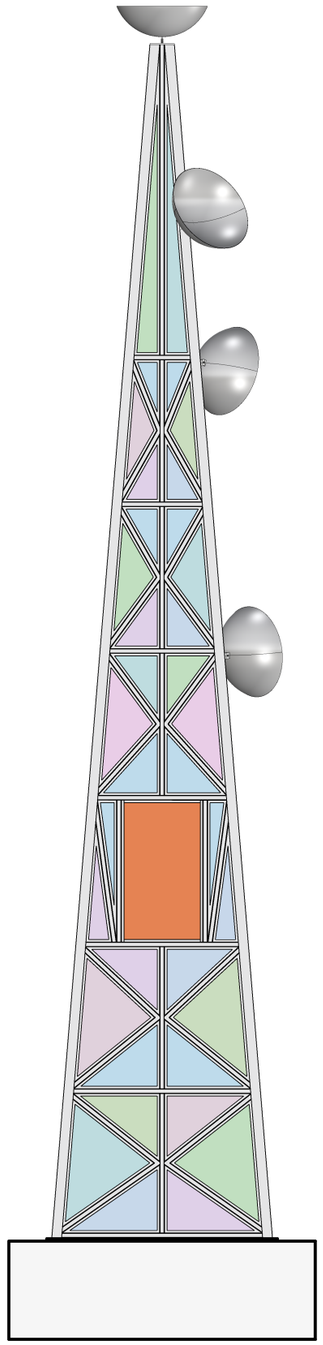

SIDE ELEVATION - 1:50

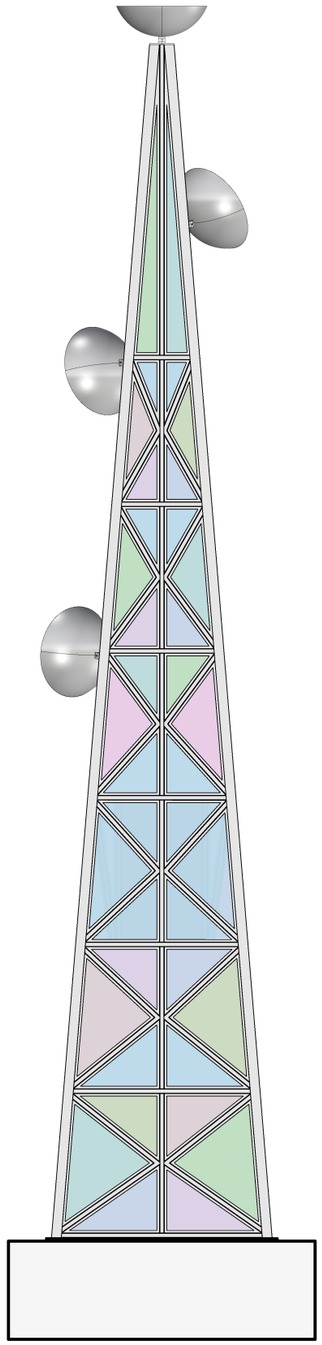

BACK ELEVATION - 1:50

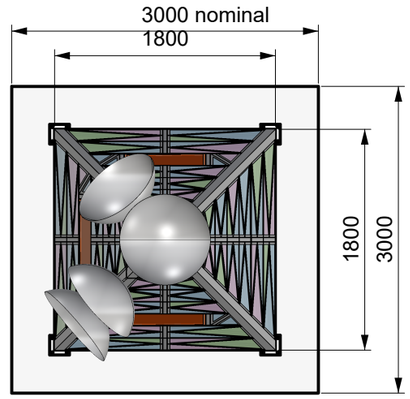

PLAN - 1:50

DRAWN	GABRIELS	UNLESS OTHERWISE SPECIFIED: DIMENSIONS ARE IN MILLIMETERS	PROJECT:	CO-OP LIVE WALKING TRAIL	DRAWING TITLE:	CWT_002A INDICATIVE DESIGN DETAILS	
APPROVED	--	NOTES NOT FOR CONSTRUCTION	CLIENT / VENUE:	OVG - HOLT TOWN, MANCHESTER, M40 7FQ	SUB-TITLE:	CONCEPT	SHEET SCALE: NOTED
DATE	11/01/2024	DO NOT SCALE IF IN DOUBT ASK	PROJECT NUMBER:	NS2328	DRAWING NUMBER:	NS2328_CWT_002A_02_001	REVISION NUMBER: A REVISION DATE:

NEWSUBSTANCE LTD

This drawing is the property of
NEWSUBSTANCE Ltd
It may not be reproduced in whole or part
without the prior written consent of the company.

A3

Project: COOP LIVE PATH	Sheet: 1	defined by design (dp)²
Calculation Title: DESIGN CHECKS	Project No.: 240365	
	T.T 07/03/24	

ANTENNA

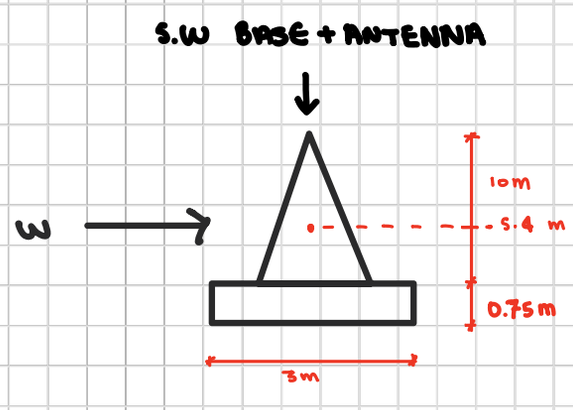

OVERTURNING

S.W BASE = 25 KN/m³ x 0.70m x 3² = 158 KN
ANTENNA = 2KN/LEG & 2KN(4) = 8 KN
& 166 KN

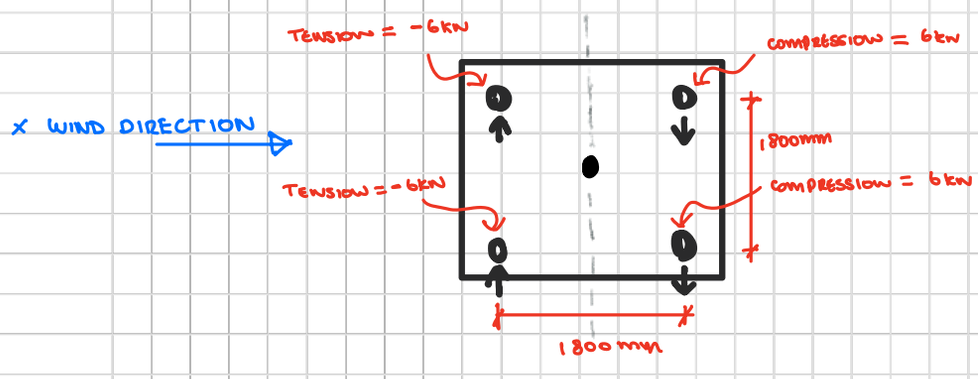

PURE MOMENT

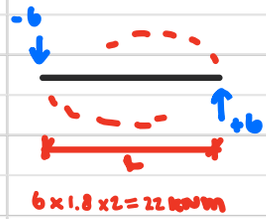

RESTORING MOMENT = 1.5m x 166 KN = 249 KNm
OVERTURNING MOMENT = 5.4 m x 12 KN x 1.5 F.OS = 98 KNm

98 KNm < 249 KNm

OK

TENSION STRESS $\sigma = \frac{\Sigma M}{W_y} = \frac{22 \times 1.5}{3^3/6} = 7.3$ KN/m² (F.O.S)

COMPRESSIVE STRESS $\sigma = F/A = \frac{169}{9m^2} = 18.7$ KN/m²

ALSO < 75 A.B.P

MAX σ = 7.3 + 18.7 = 26 KN/m²
MIN σ = -7.3 + 18.7 = 11.4 KN/m²

∴ NO TENSION THEREFORE OK.

R.C DESIGN IS ON EXCEL

REBAR SUMMARY: 18x H16 @ 175 BOTH DIRECTIONS
C32/40.

Project: COOP LIVE PATH	Sheet :	defined by design (dp)²
Calculation Title : DESIGN CHECKS	Project No.: 240365	
	T.T 07/03/24	

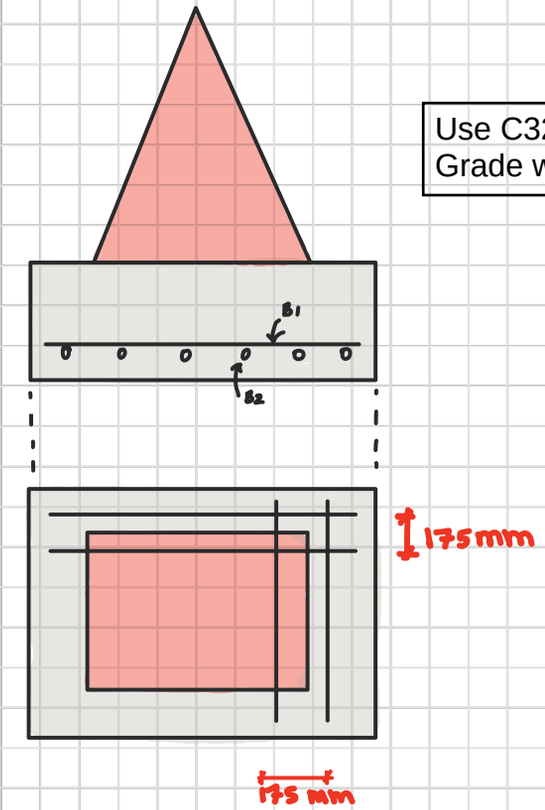

Use C32/40 Concrete Grade with 50mm cover

$\frac{2880}{175} + 1 = 17.5$

NO. BARS REQUIRED = 18 (BOTH DIRECTIONS)
BAR LENGTH REQUIRED = 2880 mm
∴ 18x H16 @ 175 BOTH WAYS

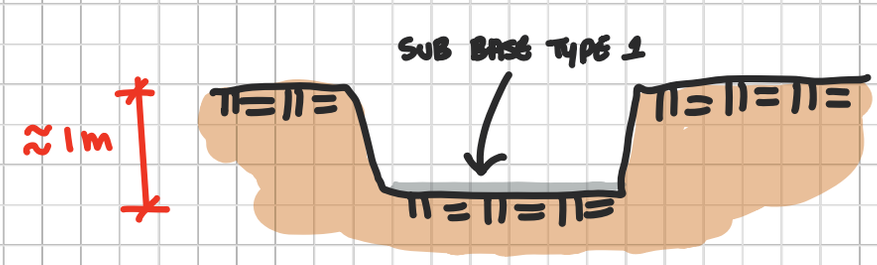

EXCAVATE AND LAY SUB BASE TYPE 1

MINIMUM STEEL GOVERNS

$A_{s\,min} = 0.16\% \times 1000 \times 750 = 1200\ mm^2/m$

$A_{s\,req} = 1200\ mm^2/m \times 2.884 = 3461\ mm^2$

$L = 3000 - 50(2) - 16$
$= 2884\ mm$

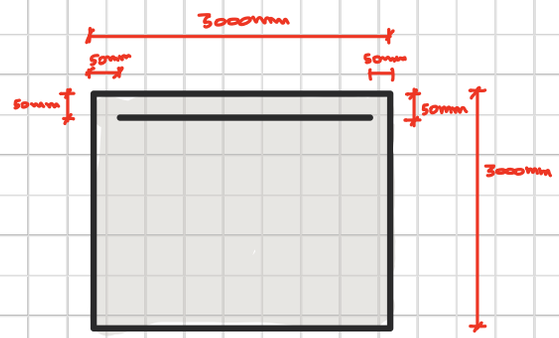

Project	Spreadsheets to Eurocode 2	mpa The Concrete Centre	NG NEER & Partners		
Client	Advisory Group		Made by TT	Date 07-Mar-24	Page 289
Location	Antenna Coop Live		Checked DEP	Revision -	Job No R68
eurocode 2	PAD FOUNDATION DESIGN to EN 1992-1 : 2004	Single column base			
	Originated from TCC81.xlsm v4.11 on CD	© 2003 - 2024 TCC			

Usage: Crowds

MATERIALS

	f_{ck}	32	MPa	d_g	20	mm	γ_c	1.5 concrete
	f_{yk}	500	MPa	cover	50	mm	γ_s	1.15 steel
Densities - Concrete, γ_{ck}		25	kN/m³	Soil, γ_k	20	kN/m³	Steel class	H
Shear resistance angle, φ_k		30	degrees					
Effective cohesion, c'_k		0	kPa					
Overburden depth		0	mm					

DIMENSIONS mm

BASE		COLUMN	
L =	3000	h =	1800
B =	3000	b =	1800
depth H =	700		
ex =	0	ey =	0

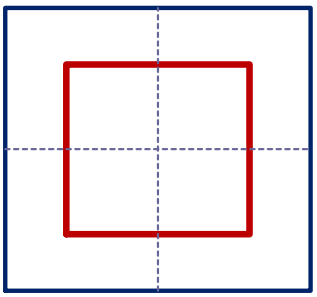

Plot (to scale)

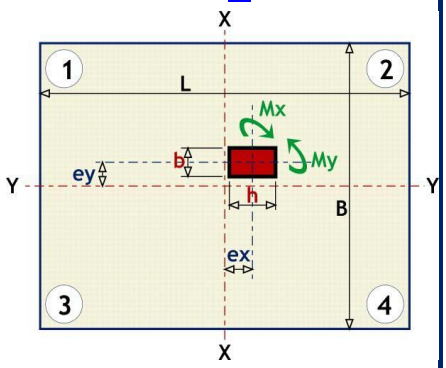

Key

COLUMN REACTIONS kN, kNm *characteristic*

	DEAD	IMPOSED	WIND
Axial (kN)	8.0		
Mx (kNm)	22.0		
My (kNm)			
Hx (kN)			
Hy (kN)			
ψ_0 =		0.7	0.5

see EN 1990 - Table A1.1

BEARING kPa

	Combo 1	Combo 2	
Max q_{Ed}	27.2	20.2	*applied pressures*
q_{Rd}	399.2	173.1	*permitted pressures*
q_{EQP}/q_{Rd} ≈	#N/A	#N/A	*#N/A*
bearing area	8.202	8.202	*m²*

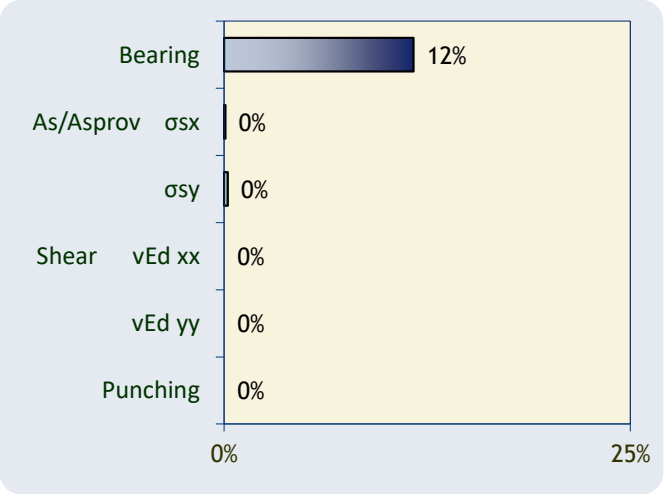

Efficiency

STATUS #N/A

REINFORCEMENT

Mxx =	2.0	kNm	Myy =	0.6	kNm
b =	3000	mm	b =	3000	mm
d =	642	mm	d =	626	mm
As =	7	mm²	As =	3	mm²
Provide	*16H16 @ 200 B1*		*Provide*	*15H16 @ 225 B2*	
As prov =	3217	mm²	As prov =	3016	mm²

BEAM SHEAR

VEdxx =	0.0	kN at d from col face	VEDyy =	0.0	kN at d from col face
vEd =	0.000	N/mm²	vEd =	0.000	N/mm²
or VEdxx =	0.0	kN at 2d from col face	or VEDyy =	0.0	kN at 2d from col face
vEd =	0.000	N/mm²	vEd =	0.000	N/mm²
vRd,c =	0.385	N/mm²	vRd,c =	0.388	N/mm²

PUNCHING SHEAR

d ave =	634	mm	u crit =	0	mm
As prov =	0.164	%	vEd max =	-0.013	N/mm² at col face
vEd =	0.000	N/mm²	vRd,c =	0.386	N/mm²