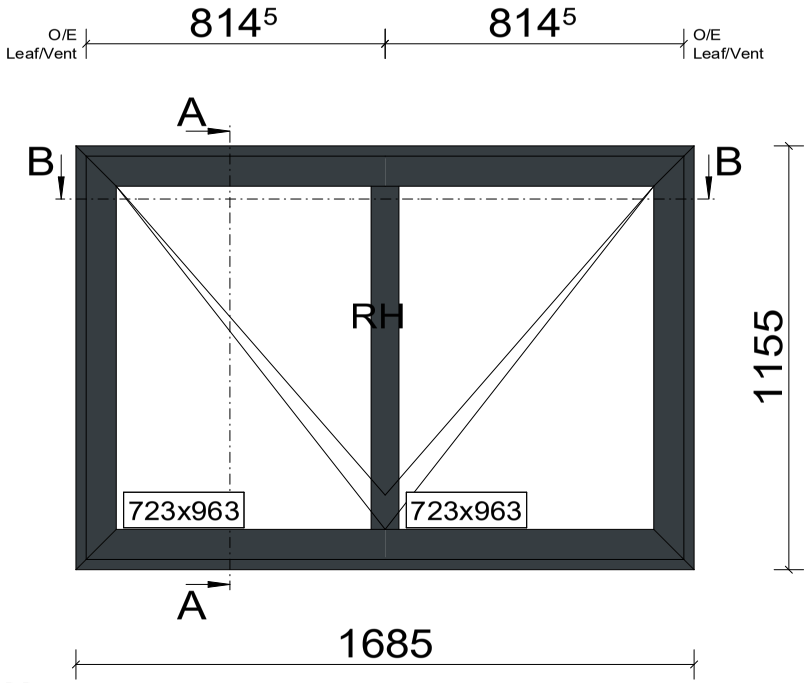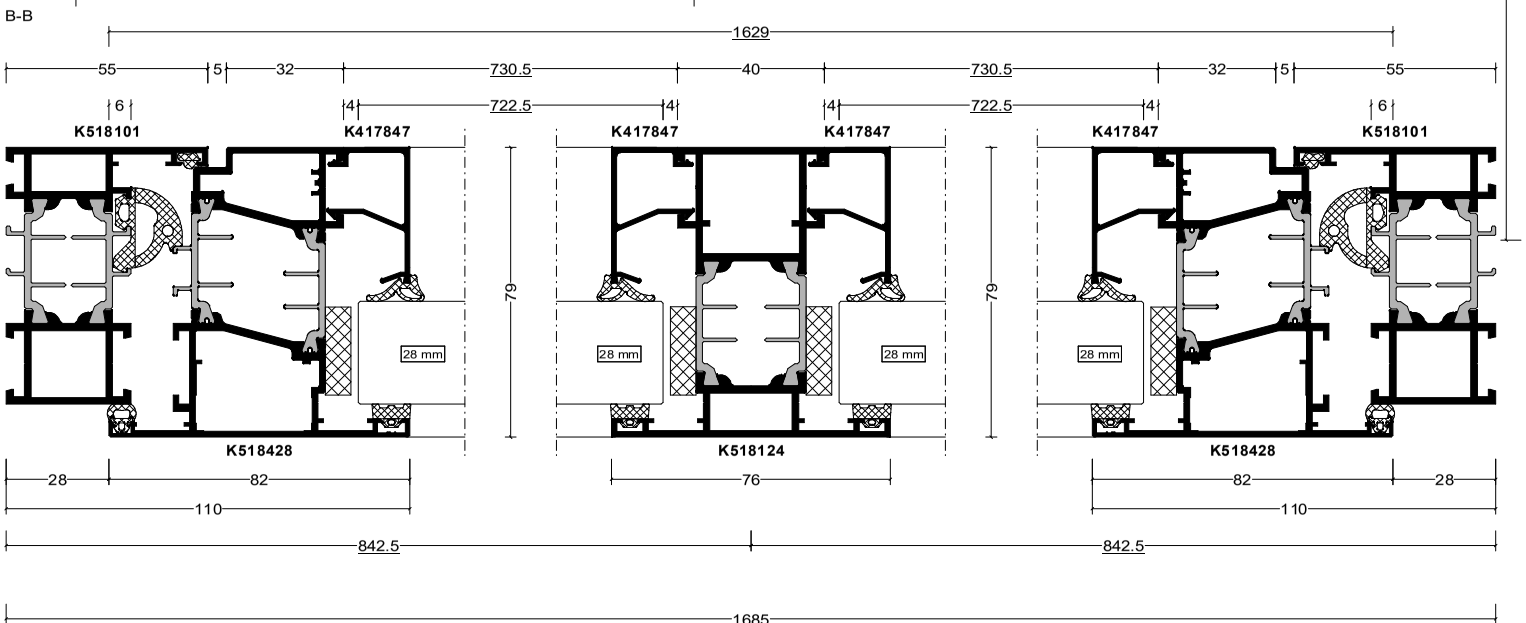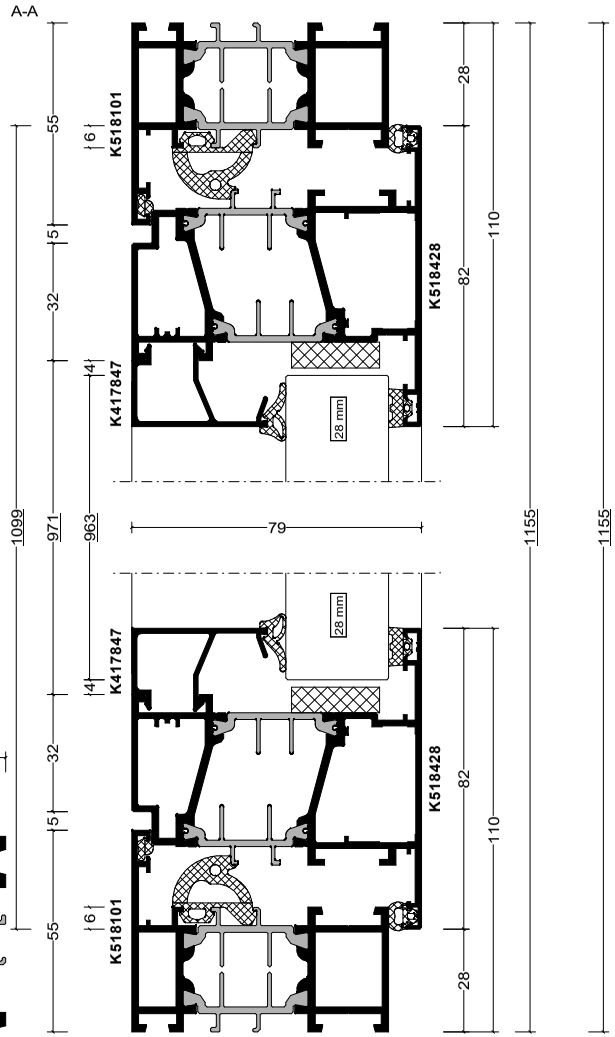Pos. 001, Quantity: 1
Finish: -8 RAL 7016
Job: 25143 Multi Utility
Job number:L1022140
Quotation Number: Q1022615
System: Aluprof MB-70 CASEMENT Basic Standard
Exterior View