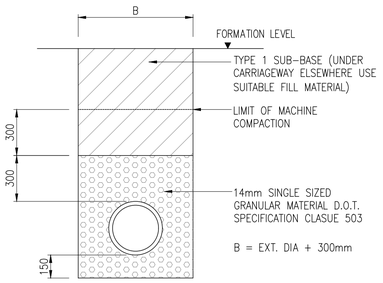


## CLASS 'S' BEDDING DETAIL

TYPE 'S' BEDDING TO BE USED FOR PIPES GENERALLY IN FOOTWAY AND LANDSCAPED AREAS, AND FOR PIPES UNDER TRAFFICKED AREAS WITH MORE THAN 1.2m COVER

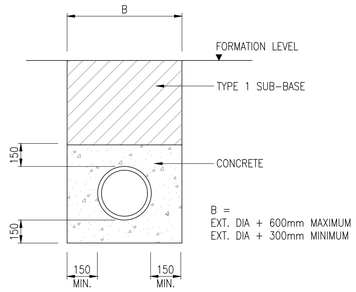


## DETAIL OF CLASS 'Z' CONCRETE SURROUND

(FOR PIPES UNDER TRAFFICKED AREAS WITH <1.2m COVER)

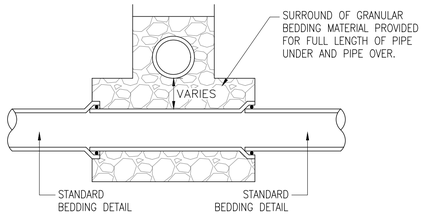


## PIPE CROSSINGS OVER

| STANDARD MIX | GRADE OF CONCRETE | APPLICATIONS |
|---|---|---|
| ST1 | C7.5 | FILLINGS, BLINDINGS, SOFT SPOTS AND DRAINAGE SUMPS |
| ST4 | C20 | ALL OTHER APPLICATIONS |

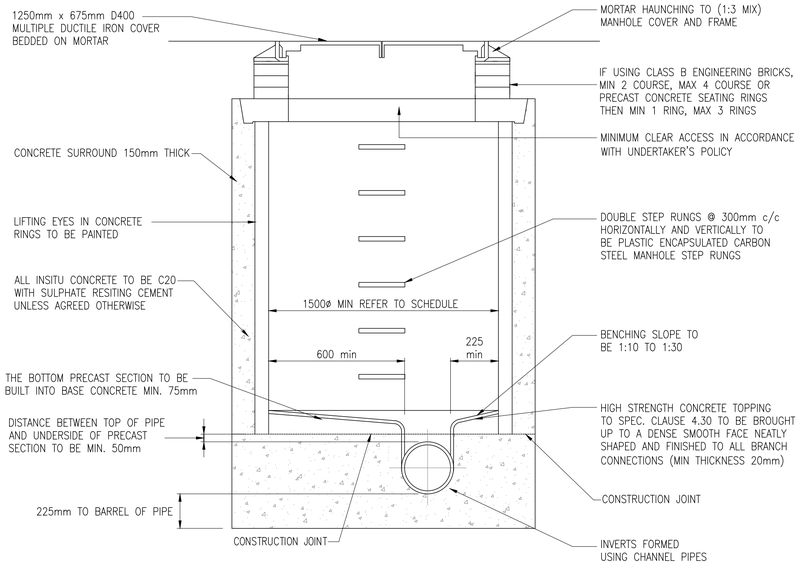


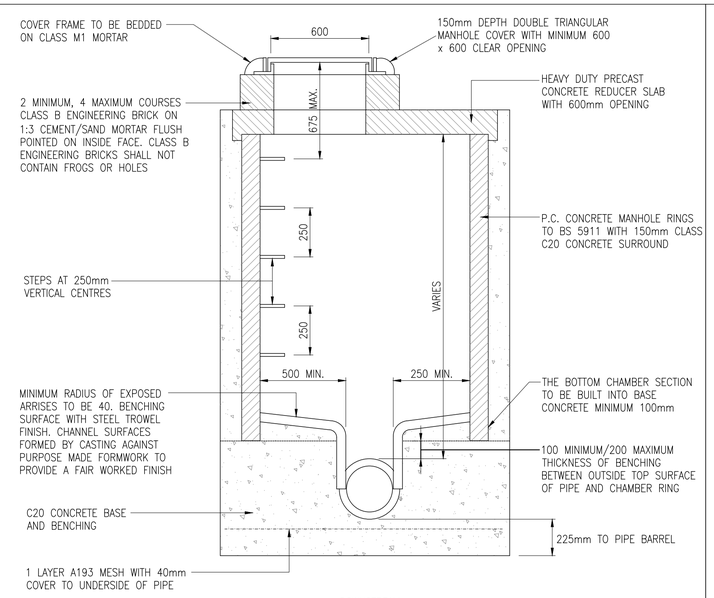


| NOMINAL DIA. (mm) | EFFECTIVE LENGTH (m) |
|---|---|
| 150 to 600 | 0.6 |
| 675 to 750 | 1.0 |
| over 750 | 1.25 |

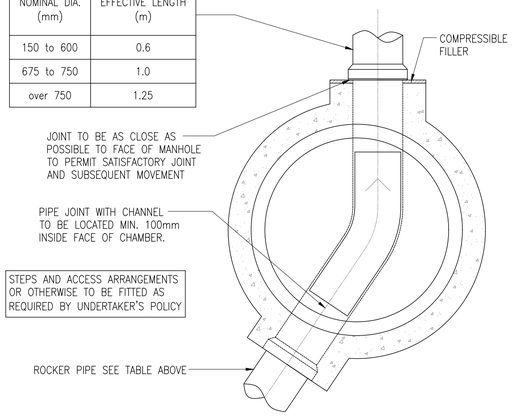


| MIN. BENCHING WIDTHS TO LANDING SIDE OF MANHOLE | |
|---|---|
| PIPE ø | MIN. BENCHING |
| 400 & BELOW | 600mm |
| 450 – 700 | 750mm |
| 750 & ABOVE | 1100mm |

## TYPICAL MANHOLE TYPE C

(MAX. DEPTH FROM GROUND LEVEL TO SOFFIT OF PIPE 1.0m – 1.6m)

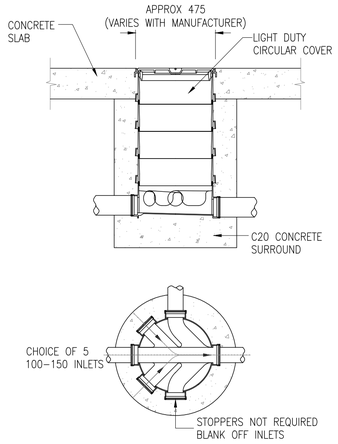


## POLYPROPYLENE INSPECTION CHAMBER DETIALS

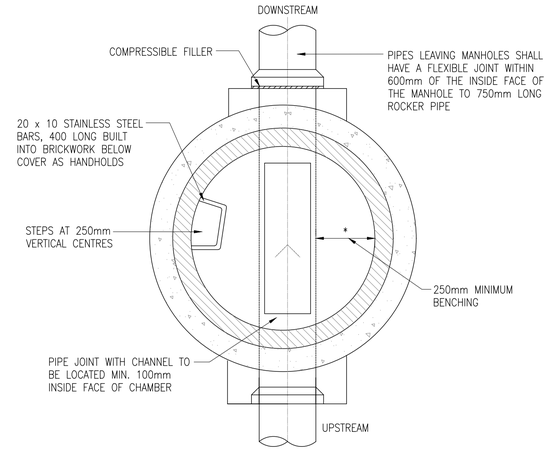


## TYPICAL MANHOLE TYPE B

(MAX. DEPTH FROM GROUND LEVEL TO SOFFIT OF PIPE 3.0m)

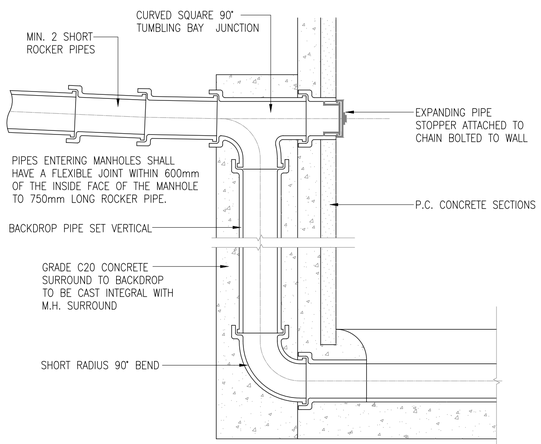


## TYPICAL VERTICAL BACKDROP DETAIL

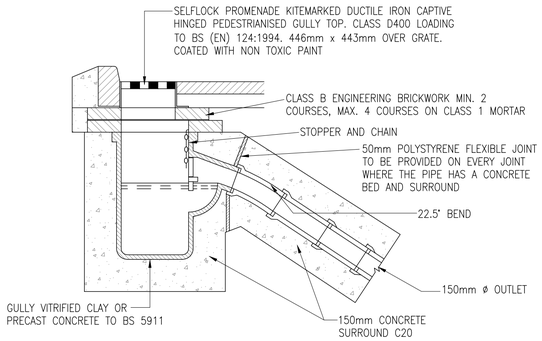


GULLY GRATING AND FRAME TO BS EN 124 CLASS D (40 TONS)

| | GULLY FRAME | | |
|---|---|---|---|
| SIZE OF GULLY (mm) | MIN.WIDTH | MIN.AREA OF WATERWAY | MIN.DEPTH OF FRAME |
| 450x900 DEEP | 450mm | 900cm$^2$ | 75mm |

NOTES
1. GULLY, GRATING AND FRAME TO COMPLY WITH BS EN 124
2. BACKFILL TO GULLY CONNECTIONS BELOW FORMATION IN CARRIAGEWAYS SHALL BE TYPE 1 SUB-BASE MATERIAL. WHERE MECHANICAL COMPACTION IS IMPRACTICAL THE BACKFILLING SHALL BE GRADE C10P/20 CONCRETE.
3. GULLY GRATING AND FRAME TO BE HINGED TYPE.

## TYPICAL GULLY DETAIL

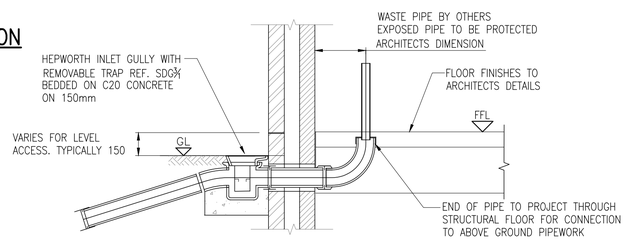


## BACK INLET GULLY FOR WASTE PIPE

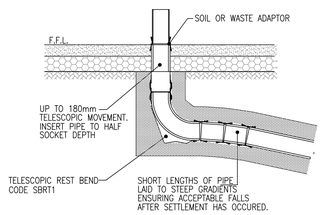


## TYPICAL TELESCOPIC REST BEND CONNECTION DETAIL

**(FOR BUILDINGS WITH FOUR OR MORE STOREYS)**

## GENERAL NOTES

1. SETTING OUT SHALL BE UNDERTAKEN USING ONLY THE INFORMATION GIVEN. DISTANCES SHOULD NOT BE SCALED FROM THIS DRAWING.
2. ALL SEWERS SHALL BE CONSTRUCTED IN ACCORDANCE WITH DESIGN CONSTRUCTION GUIDANCE AND UNITED UTILITIES DETAILS & GUIDELINES.
3. THE MINIMUM GRAVITY PIPE DIAMETER UNDER ADOPTABLE HIGHWAYS SHALL BE 150mm.
4. IT IS THE RESPONSIBILITY OF THE CONTRACTOR TO VERIFY ALL INFORMATION GIVEN WITH REGARDS TO EXISTING SERVICES AND DRAINAGE CONNECTIONS ETC. PRIOR TO COMMENCING THE WORKS. THE RATES SHALL INCLUDE FOR HAND DIG AROUND SERVICES WHERE NECESSARY. THE CONTRACTOR SHALL ADHERE TO THE CDM REGULATIONS AT ALL TIMES.
5. THE OUTSIDES OF ALL SEWERS SHALL BE A MINIMUM OF 1.0m FROM KERB LINES AND THE OUTSIDE OF MANHOLES SHALL BE A MINIMUM OF 0.5m FROM KERB LINES.
6. EXISTING FLOWS IN WATERCOURSES, SEWERS AND LAND DRAINS SHALL BE MAINTAINED AT ALL TIMES.
7. ONLY TRAINED PERSONNEL SHALL BE PERMITTED TO ENTER CONFINED SPACES.
8. ALL MATERIALS TO BEAR THE RELEVANT B.S. KITEMARK AND COMPLY FULLY WITH THE SPECIFICATIONS. ALL CONCRETE & CONCRETE PRODUCTS MUST USE SULPHATE RESISTANT CEMENT (UNLESS THE SITE INVESTIGATION REPORT PROVES THAT SULPHATE ATTACK FROM SOILS AND GROUNDWATER WILL NOT OCCUR TO WITHSTAND A CLASS.
9. ALL OPENING NOTICES ETC. AS REQUIRED UNDER HIGHWAYS ACTS ETC. ARE TO BE OBTAINED PRIOR TO COMMENCEMENT OF WORKS. ALL WORKS ARE TO BE INSPECTED BY L.A., NHBC OR THE NETWORK OPERATOR AS APPLICABLE.
10. WHERE "ULTRA RIB" UPVC PIPES (OR SIMILAR APPROVED) ARE USED IN ADOPTABLE DRAINAGE THEY SHALL STILL BE HANDLED AND LAID IN ACCORDANCE WITH THE SPECIFICATION AND GUIDANCE ISSUED BY THE HIGH PERFORMANCE PIPE ASSOCIATION.
11. A CLASS S BED AND SURROUND MUST BE USED FOR SUCH PIPES. TRENCH BACKFILL IN HIGHWAYS TO WITHIN 1M OF HIGHWAY SHALL, AS DIRECTED BY THE HIGHWAY AUTHORITY BE A SUITABLE GRANULAR MATERIAL ALL IN ACCORDANCE WITH SEWERS FOR ADOPTION CL. 4.3.4.
12. SLAB LEVELS SHALL NOT BE VARIED WITHOUT REFERENCE TO THE ENGINEER FOR GUIDANCE.
13. ALL GULLY CONNECTIONS TO BE 150mm VITRIFIED CLAY UNLESS NOTED OTHERWISE
14. ALL MANHOLE COVERS TO BE RECESSED TO ACCEPT FINISH AS DETAILED BY LANDSCAPE ARCHITECT.
15. SLOW REST BENDS TO BE USED IN ALL LOCATIONS MADE UP FROM 2No. 45 DEG BENDS (450mm TO INVERT FROM FFL).
16. MANHOLE POSITIONS AND ACCESS COVERS TO BE ACCURATELY SET-OUT BY LANDSCAPE ARCHITECT TO SUIT EXTERNAL FINISHES.
17. ALL DRAINS CAST THROUGH FOUNDATIONS TO HAVE ROCKER PIPES ON BOTH SIDES OF FOUNDATION.
18. ALL POP UP POSITIONS TO BE CONFIRMED SET OUT DIMENSIONS TO BE AGREED & PROVIDED BY OTHERS.
19. ALL FW DISCHARGE RATES TO BE CONFIRMED BY M&E DESIGNER.
20. ALL SURFACE WATER COLLECTION FEATURES TO BE CONFIRMED BY THE LANDSCAPE ARCHITECT.
21. STORAGE HAS BEEN PROVIDED IN A CELLULAR STORAGE TANK AND UP-SIZED MANHOLES AND PIPES.
22. EXISTING SEWER DEPTHS HAVE BEEN APPROXIMATED FROM LIMITED INFORMATION, NEW CONNECTIONS TO BE CONFIRMED PRIOR TO CONSTRUCTION OF ANY DRAINAGE WORKS.
23. LANDSCAPE ARCHITECT TO CONFIRM GULLY AND DRAINAGE CHANNEL LOCATIONS TO LANDSCAPED AREAS.
24. FOUL NETWORK TO BE CONFIRMED FOLLOWING CONFIRMATION OF BRANCH CONNECTION POINTS FROM BUILDING M&E DESIGNER.
25. CCTV SURVEY OF EXISTING SITE DRAINAGE REQUIRED PRIOR TO THE COMMENCEMENT OF ANY WORKS STARTING ON SITE.
26. MINIMUM COVER TO DRAINAGE SOFFIT LEVEL & ACCESS CHAMBERS ;

| LANDSCAPING | TRAFFICKED AREAS | HIGHWAYS |
|---|---|---|
| 0.600m | 0.900m | 1.200m |

CLASS 'S' BEDDING AND SURROUND TO BE USED WHERE MINIMUM COVER IS ACHIEVED.
WHERE MINIMUM COVER IS NOT ACHIEVED CLASS 'Z' BEDDING AND SURROUND (CONCRETE ENCASEMENT) IS TO BE USED.

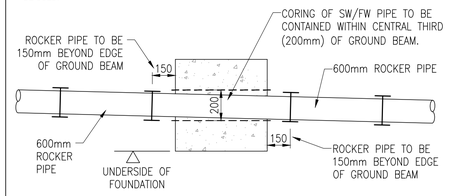


## DETAIL SHOWING SW/FW PIPE THROUGH FOUNDATION

| REV | DATE | DESCRIPTION | BY | CHK | APP |
|---|---|---|---|---|---|
| C01 | 26.04.2024 | CONSTRUCTION ISSUE | JJR | JCM | PT |
| P02 | 12.07.2023 | RIBA STAGE 4 ISSUE | JJR | JRS | KOB |
| P01 | 04.04.2023 | PRELIMINARY ISSUE | MG | PL | KOB |

DRAWING STATUS: **CONSTRUCTION**

CLIENT: TILBURY DOUGLAS

ARCHITECT: ELLIS WILLIAMS ARCHITECTS

PROJECT: SANDILANDS COMMUNITY PRIMARY SCHOOL

TITLE: BELOW GROUND DRAINAGE TYPICAL DRAINAGE DETAILS SHEET 1

| STATUS: | PROJECT No. | PROJECT - ORIGINATOR - VOL/SYS - LEVEL - TYPE - ROLE - DRAWING No. | REV: |
|---|---|---|---|
| S3 | 222-171 | SRP1034 - AJP - ZZ - 00 - D - C - 1300 | C01 |

| SCALE @ A1: | DESIGNED: | DRAWN: | CHECKED: | APPROVED: | DATE: |
|---|---|---|---|---|---|
| 1:250 | LS | KB | PL | KOB | MARCH 2023 |

AJP consulting engineers est. 1978
0151 227 1462 info@ajpltd.co.uk 1 Dale Street, Liverpool, L2 2ET