TECHNICAL SUBMITTAL

Project:	Elizabeth St, Cheetham Hill
Client:	

Project Number:	23-0704
Revision:	A
Prepared by:	Marc Stapleton

Tech Sub Number:	TS-015
Date:	17/11/2023
Reviewed by:	Luke Giller

Description:	Car Charger
Product Reference:	ROLEC0221B
Manufacturer:	Rolec
Location:	Car Park
Additional comments:	

Client Approval Status

A	B	C	Status:	Reviewed by:	Date:

Additional Comments:

ROLECEV

BASICCHARGE

Intelligent EV charging pedestal

Manufactured in the UK

BASICCHARGE

Intelligent EV charging pedestal

The BASICCHARGE is a simplistic and affordable EV charging pedestal. This versatile charger's integrated LED amenity lighting also provides greater visibility of the charging bays and surrounding areas.

This future-proof OCPP compliant pedestal can offer a simple plug & charge or pay-to-charge solution via the EV driver's smartphone and/or RFID card/fob through any chosen OCPP back-office management system.

Feature-rich, this EV charger supports dynamic load balancing and is equipped with PME fault detection, so there is no requirement for an earth rod, reducing installation costs.

Available in 1way or 2way versions, providing up to 22kW superfast charging.

Product features

- Plug & charge, mobile app or RFID controlled charging
- Choose from 1x or 2x universal charging socket(s)
- Up to 7.4kW or 22kW charging output(s)
- TruePEN PME fault detection (no earth rod required)
- Supports dynamic load balancing & static load management
- OCPP 1.6 compliant (Can integrate with any back-office)
- Over-the-air firmware / software updates
- Built-in AC overload & fault current protection (RCBO)
- Built-in 6mA DC leakage protection
- Cable lock security feature (can be permanently locked by user)
- Integrated RFID reader(s)
- LED amenity lighting head (Photocell controlled)
- MID-approved energy metering
- 4G / Wi-Fi / Ethernet connectivity
- IK10 impact resistant design
- Surface or root mountable
- OZEV grant fundable
- Designed & manufactured in the UK

Rolec EV's chargepoint management platform:

VendElectric

Other preferred back-office partners:

MONTA

Fuuse

ChargePlace Scotland electric vehicle charging

OCPP 1.6 compliant

Ability to integrate with any OCPP compliant back-office management system and app.

Easy to operate

Three quick and easy ways to operate: mobile app, RFID cards and fobs or plug & charge.

Office for Zero Emission Vehicles

Eligible for grant funding

This range is approved for grant funding via the OZEV Workplace Charging Scheme (WCS).

4G / Wi-Fi / Ethernet enabled

Complete with secure 4G, Wi-Fi and Ethernet connectivity, ensuring chargers are always online 24/7.

Branding & colour options available

Rolec offers a bespoke chargepoint branding service; from logos & brand colours, to vinyl wraps.

No earth rod required

Equipped with built-in TruePEN PME fault detection, saving installation time and costs.

The details

UP TO 22KW

Available in both single phase and three phase models, providing up to 22kW superfast charging.

BASICCHARGE is compatible with all EVs & PHEVs, charging at the fastest speed possible, ensuring vehicles are ready to go in no time.

2 WAY CHARGING

The BASICCHARGE is available in 1way and 2way versions, allowing up to two vehicles to charge simultaneously, using just one EV charging pedestal.

The perfect EV charging pedestal solution for fleet, workplace and private car park requirements.

ACCURATE BILLING

Built-in MID-approved energy metering ensures accurate consumption reporting, which is essential for businesses and residential car parks, wishing to bill for their usage. Use our back-office management platform to generate revenue by setting your own tariffs.

SAFE AND SECURE

Rest assured, Rolec's entire EV chargepoint range meets the currently required safety and security standards.

Over-the-air updates allow the chargers to receive the very latest features, ensuring a safe and future-proof product 24/7.

3 YEAR WARRANTY

Rolec EV chargepoints are designed, developed and manufactured in the UK and come with a 3 year warranty included as standard, for added peace of mind on your investment.

Specifications

Product Overview:

	Connection Type	Charging Output	Input Supply	Unit Colour	Product Code
Single Phase Units	1x Type 2 (IEC 62196) charging socket	Up to 7.4kW (32A)	1x 32A Single Phase 230V AC (±10 %) 50/60Hz	Black	ROLEC0211B
				Grey	ROLEC0211G
				White	ROLEC0211W
	2x Type 2 (IEC 62196) charging sockets	Up to 7.4kW (32A) per socket	1x 63A Single Phase 230V AC (±10 %) 50/60Hz	Black	ROLEC0221B
				Grey	ROLEC0221G
				White	ROLEC0221W
Three Phase Units	1x Type 2 (IEC 62196) charging socket	Up to 22kW (32A)	1x 32A Three Phase 400V AC (±10 %) 50/60Hz	Black	ROLEC0213B
				Grey	ROLEC0213G
				White	ROLEC0213W
	2x Type 2 (IEC 62196) charging sockets	Up to 22kW (32A) per socket	1x 63A Three Phase 400V AC (±10 %) 50/60Hz	Black	ROLEC0223B
				Grey	ROLEC0223G
				White	ROLEC0223W

BasicCharge 1way unit:

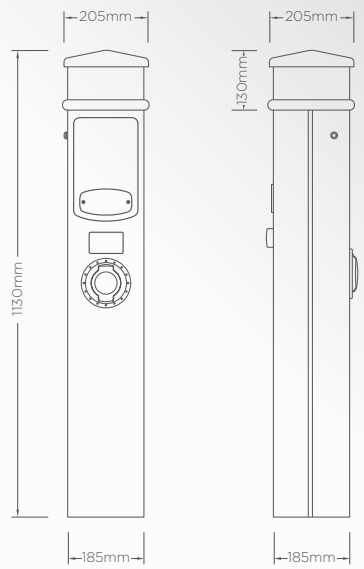

BasicCharge 2way unit:

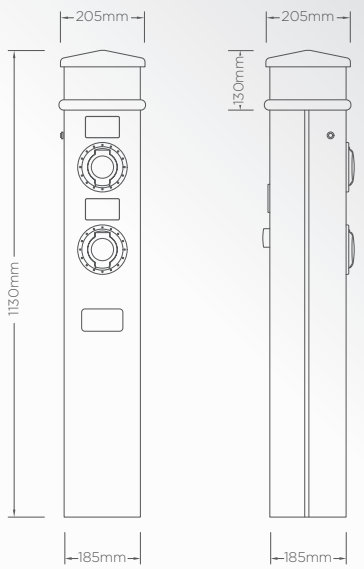

Ground mounting base:

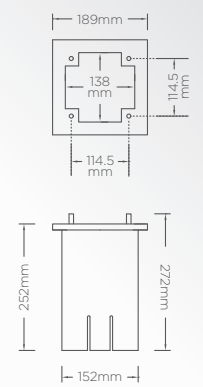

Specifications

Technical Data:

User Interface	• Mobile app • RFID reader (MIFARE ISO/IEC 14443 A) • Plug & charge • RGB LED status indicator halo(s) – configurable
Charge Protocol	Mode 3 (IEC 61851-1)
Protection	• AC overload & fault current protection – 40A 30mA Type A RCBO (per socket) • DC fault protection – 6mA • Lightning surge, over temperature protection • TruePEN PME fault detection – No earth electrode/rod required • Supports automatic dynamic load balancing (may require additional hardware) • Supports static load management (software configurable)
Cable Terminals	• Single Phase – 3x 50mm 1P + N + E • Three Phase – 5x 50mm 3P + N + E
Communications	• 4G LTE Cat-1 (built-in nano SIM, subscription required) • Wi-Fi 802.11 b/g/n 2.4 GHz • RJ45 Ethernet connection • Bluetooth Low Energy (BLE 4.1) (for installer configuration purposes) • OCPP 1.6J • Cyber security – Data encryption level TLS 1.2
Energy Metering	Integrated Class 1 MID compliant metering
Amenity Lighting	360° Low energy LED • Rating – 2 x G9 2W LED, 230-240V AC • Colour temperature – 6500K • Protection – 6A 30mA Type A RCBO
Standby Power Consumption	< 7.5W (per socket, excluding lighting)
Dimensions	205mm x 1130mm x 205mm (W x H x D)
Weight	< 15kg (model dependant)
Environmental	• Ingress protection – Enclosure IP65, Socket IP54 • Impact protection – IK10 • Operating temperature – -30°C to +50°C • Operating humidity – 5% to 95%
Materials	• Substructure – Hot-dipped Galvanised Steel • Panel – 3.2mm Aluminium composite • Lens – High impact resistant 3mm Polycarbonate • Lid/collar – ABS Granulate Natural Polyethylene
Unit Colour	Black Grey White Other colours available upon request
Certifications & Compliances	• EV Charging Compliance – EN 61851-1:2019, EN 61851-22:2002 • Smart Charge Points – (SI 2021/1467) Ex. Schedule 1 • Wiring Regulations – BS 7671:2018+A2:2022 • EMC Compliance – EN 61000-6-3:2007+A1:2011, EN 61000-6-2:2005, 2014/30 /EU, SI 2016/1091 • Safety Compliance (LVD) – EN 62368-1:2014, 2014/35/EU, SI 2016/1101 • Communications / RED – EN 62311:2008, 2014/53/EU, SI 2017/1206 • Environmental Protection – BS EN 60529:1992+A2:2013 • Impact Rating – BS EN 62262:2002+A1:2021 • Metering – 2014/32/EU, SI 2016/1153 • RoHS – 2011/65/EU, SI 2012/3032 • REACH – 1907/2006, REACH etc. (Amendment) Regulations 2021 • Certification Markings – CE & UKCA
Warranty	3 years

Options & accessories

Product Code	Item Description
RFID0010	RFID card
RFID0020	RFID fob
GMCP0010	Ground mounting base for BasicCharge
EVCB0020	Root mount protection barrier – 48mm
EVCB0040	Surface mount protection barrier – 48mm
EVPS0010	EV parking sign – A4 landscape (Other sizes are available)
EVPP0100	5m 32A Type 2 to Type 2 charging cable
EVPP0107	10m 32A Type 2 to Type 2 charging cable
EVPP0105	5m 32A 3 Phase Type 2 to Type 2 charging cable
EVPP0108	10m 32A 3 Phase Type 2 to Type 2 charging cable (Other cables are available, including Type 1 options)
ACSR0125	100A 16mm² Screened CT Clamp with 10m Cable

RFID0010
RFID0020

EVCB0040

EVPS0010

GMCP0010

EVPP0100

Branding & colour options available

Rolec offer a bespoke chargepoint branding service; from logos & brand colours, to vinyl wraps. This can be arranged at time of order. Contact Rolec for details.

Brand names, logos and trademarks used herein remain the property of their respective owners. This listing of any firm or their logos is not intended to imply any endorsement or direct affiliation with Rolec Services Ltd. and is purely to demonstrate branding opportunities.

BUSINESSES

WORKPLACE | COMMERCIAL | DEVELOPMENT | RESIDENTIAL | DESTINATION | FLEET

VendElectric

- Full control of your own chargepoint network
- A future-proof and scalable solution
- Mapped network
- Customisable tariffs
- Generate revenue
- Smart reporting and analytical feedback
- Fleet management solutions
- Automatic fault notifications
- Over-the-air updates
- Optional electrical load management:
  (Ideal for sites where the collective load may be greater than the electrical supply)

Other preferred back-office partners:

MONTA

Fuuse

ChargePlace Scotland electric vehicle charging

Managing chargepoints

Rolec EV's range of AC fast and DC rapid chargepoints are suitable for all types businesses. OCPP integration allows these units to be managed by any compliant back-office, including Rolec EV's own management platform, VENDELECTRIC.

Operating chargepoints

There are 3 quick and easy ways for drivers to operate the chargepoints: mobile app, RFID cards and fobs or plug & charge.

VendElectric app

Manage your charging activity whilst benefiting from an variety of features:

- Easily find and navigate to a chosen destination using the chargepoint map
- Sort and save favourite locations
- View current & past charge sessions
- Review statistics and analytical data
- Exportable data
  (ideal for submitting benefit-in-kind claims)
- Live charge session notifications
- Virtual wallet for quick activation
- Multiple EVs can be added and used on a single registered account

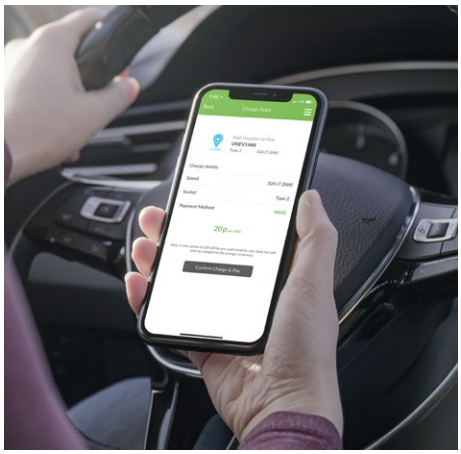

DOWNLOAD THE APP

GET IT ON Google Play

Download on the App Store

RFID card/fob

Ideal for workplace employees who frequently use the same charging points, whether for their own or their company vehicle. Hosts can assign an RFID to either the driver or a vehicle (VRM).

For more about **VendElectric**, including data management pricing & plans, visit **www.rolecserv.com/chargepoint-management-system**

THIS DOCUMENT CONTAINS INFORMATION THAT IS SUBJECT TO CHANGE WITHOUT NOTICE.

The latest version of this publication can be downloaded at https://www.rolecserv.com/downloads-ev-charging

Illustrations of the product and user interface are for marketing purposes only.

Brand names, logos and trademarks used herein remain the property of their respective owners.
This listing of any firm or their logos is not intended to imply any endorsement or direct affiliation
with Rolec Services Ltd. and is purely to demonstrate branding opportunities.

© 2022 by Rolec Services. All rights reserved.

EVBD-V01-R0 BasicCharge Data Sheet

Manufactured
in the UK

ROLECEV

t: 01205 724754
e: enquiries@rolecserv.co.uk

www.rolecserv.com