Altrincham Road, Manchester

Drainage Strategy

June 2024

Waterco

Assessment | Modelling | Design

Project Information	
Project:	Altrincham Road, Manchester
Report Title:	Drainage Strategy
Client:	Chicken Cabins Ltd
Instruction:	The instruction to undertake this Drainage Strategy was received from Dean Walker of Soul Foods Group acting on behalf of the Client.
File Ref:	14948-Drainage Strategy-02.2

Approval Record	
Author:	Megan Williams BSc (Hons)
Checker:	Aled Williams BSc (Hons) MCIWEM C.WEM
Approver:	Nigel Jones BEng (Hons) CEng MICE

	Document History	
Revision	**Date**	**Comment**
01	18/11/2022	First issue
02	17/04/2024	Second issue – Updated with MicroDrainage network simulations
02.2	27/06/2024	Update to revision 02 to include exceedance flow drawing and up to date site layout plans

The copyright in this document (including its electronic form) shall remain vested in Waterco Limited (Waterco) but the Client shall have a licence to copy and use the document for the purpose for which it was provided. Waterco shall not be liable for the use by any person of the document for any purpose other than that for which the same was provided by Waterco. This document shall not be reproduced in whole or in part or relied upon by third parties for any use whatsoever without the express written authority of Waterco.

This report will remain valid for a period of twelve months (from the date of last issue) after which the source data should be reviewed in order to reassess the findings and conclusions on the basis of latest available information.

Contents

Introduction 1

Existing Conditions 1

Development Proposals 3

Planning Policy.....3

Consultation 4

Surface Water Management 5

Maintenance 7

Foul Drainage 8

Conclusions 9

Recommendations.....9

Appendices

Appendix A Location Plan and Aerial Image

Appendix B Topographical Data

Appendix C Historical BGS Borehole Record

Appendix D UU Sewer Plan & Correspondence

Appendix E Proposed Development Plans

Appendix F LLFA Correspondence

Appendix G MicroDrainage Simulations

Appendix H Maintenance Schedule

Appendix I Concept Designers Risk Assessment

Tables

Table 1 – Existing Brownfield Runoff Rates.....5

Table 2 – Pollution Hazard Indices 7

Introduction

Waterco has been commissioned to undertake a Drainage Strategy in relation to a proposed drive through restaurant within Tesco Car Park, Altrincham Road, Baguley, Manchester, M23 9TJ.

Manchester City Council as a Lead Local Flood Authority (LLFA) is a statutory consultee for major planning applications in relation to surface water drainage, requiring that all planning applications are accompanied by a Sustainable Drainage Strategy. The aim of the Sustainable Drainage Strategy is to identify water management measures, including Sustainable Drainage Systems (SuDS), to provide surface water runoff reduction and treatment.

Existing Conditions

The site covers an area of approximately 4,060m^2 and is located at National Grid Reference (NGR): 380224, 389297. A location plan and an aerial image are included in Appendix A.

Online mapping (including Google Maps / Google Streetview imagery, accessed June 2024) shows that the site comprises a car wash and part of Tesco car park. The site is bordered by Altrincham Road (A560) to the north, Tesco car park to the east, Tesco Petrol Station to the south and the access road to Tesco off Altrincham Road to the west. Access to the site is provided from the Tesco access road off Altrincham Road.

Local Topography

Existing site levels are shown on a proposed 'External Works' drawing reference 1747-4/3 Revision B. The external works drawing shows that the site slopes from approximately 33.89 metres Above Ordnance Datum (m AOD) in the north-east to 33.09m AOD in the south.

Topographic levels to m AOD have also been derived from a 1m resolution Environment Agency (EA) composite 'Light Detecting and Ranging' (LiDAR) Digital Terrain Model (DTM). The LiDAR data corroborates with the topographical levels on the external works drawing and shows that the site is generally flat.

Topographical data is provided as Appendix B.

Ground Conditions

The British Geological Survey (BGS) online mapping (1:50,000 scale) indicates that the site is underlain by superficial Devensian Glaciofluvial Sheet Deposits generally comprising sand and gravel. The superficial deposits are identified as being underlain by the Bollin Mudstone Member.

The geological mapping is available at a scale of 1:50,000 and as such may not be accurate on a site-specific basis.

The closest historical BGS borehole record (BGS refence: SJ88NW1158) is located approximately 80m south-east of the site (NGR: 380330, 389270) and is included in Appendix C. The borehole record identifies:

- Reinforced concrete between ground level and 0.4 metres below ground level (m.bgl)

- Made Ground comprising grey silty sand between 0.4m.bgl and 1.2m.bgl.
- Made Ground consisting of brick rubble sand and stone between 1.2m.bgl and 1.5m.bgl.
- Medium dense dark brown sand below 1.5m.bgl up to 2m.bgl.
- Medium dense light brown medium sand, becoming loose between 2m.bgl and 3.80m.bgl
- Completely weathered brown clayey Keuper Marl between 3.80m.bgl and 4.3m.bgl.
- Weathered red/brown Keuper Marl between 4.3m.bgl and 6m.bgl.

Groundwater was struck at 3m.bgl.

According to the EA's Aquifer Designation data, obtained from MAGIC's online mapping [accessed June 2024], the Devensian Glaciofluvial Sheet Deposits are classified as a Secondary A Aquifer. Secondary A Aquifers are 'permeable layers capable of supporting water supplies at a local rather than strategic scale, and in some cases forming an important source of base flow to rivers. These are generally aquifers formerly classified as minor aquifers'.

The underlying Bollin Mudstone Member is described as a Secondary B Aquifer. Secondary B Aquifers are 'predominantly lower permeability layers which may store and yield limited amounts of groundwater due to localised features such as fissures, thin permeable horizons and weathering. These are generally the water-bearing parts of the former non-aquifers'.

The EA's 'Source Protection Zones' data, obtained from MAGIC's online mapping [accessed June 2024], indicates that the site is not located within a Groundwater Source Protection Zone.

Site Investigation

A Site Investigation Report has been produced by Crossfield Consulting Ltd in March 2021. The report states:

'*Beneath the bituminous surfacing which is typically 0.1 to 0.14m thick, Made Ground comprising a dense sandy gravel, with brick and concrete fragments, is present to a depth of approximately 0.7m.'*

'The superficial deposits were recorded to be wet from approximately 3.0m within each hole. Standing water was measured at approximately 1.9m following completion of the holes.'

Local Drainage

Public sewer records have been obtained from United Utilities (UU) and are included in Appendix D. The UU sewer records show that there is 450mm public surface water sewer located immediately north-west of the site, flowing west, before upsizing to 1350mm. The 450mm public surface water sewer forms the connection point from the surface water drainage system serving the Tesco site.

There is also a 525mm public combined sewer originating approximately 15m south-west of the site, adjacent to the existing Tesco Petrol station, flowing south. Public combined manhole 2201, located approximately

65m south-west of the site, has an identified cover level of 32.72m AOD and an invert level of 30.69m AOD. The sewer records also identify a 300mm public combined sewer located approximately 90m south-east of the site, flowing in an easterly direction. The 300mm public combined sewer accommodates foul flows from the Tesco store.

A 'Drainage Details' drawing provided by the Client (Appendix E) identifies the existing drainage system within the site which serves the existing Tesco car park. Surface water flows from the Tesco car park enter an existing chamber in the north-western extent of the site (manhole chamber S8). From manhole S8 surface water flows discharge to the 450mm public surface water sewer north-west of the site. Manhole S8 has an identified cover level of 33.20m AOD and an invert level of 30.10m AOD.

An existing foul manhole adjacent to the existing Tesco Petrol station (reference F7) has a cover level of 32.87m AOD and an invert level of 31.25m AOD.

Development Proposals

The proposed development is for the erection of a single storey building to form mixed restaurant and hot food takeaway use (sui generis), incorporating a 'drive-thru' facility, car and cycle parking, the creation of a new pedestrian and cycle footpath link into the site from Altrincham Road and associated landscaping within part of the existing supermarket car park. A development plan is included in Appendix E.

Proposed floor levels will be set at 33.50m AOD.

The proposed development will introduce hardstanding areas in the form of the building, car parking and access. New formally drained hardstanding will comprise 0.207ha. The remaining site area comprises of 540m^2 of proposed permeable landscaped areas and 1,450m^2 of existing hardstanding in the form of an access road and parking spaces in the eastern extent of the site which will continue to be served by the existing drainage system.

All measurements have been taken from a PDF copy of drawing 'P121A- Proposed Site Plan' and are approximate only.

Planning Policy

The Manchester City Council Core Strategy (adopted July 2012) contains the following policies relating to drainage:

'Policy EN14 - Flood Risk

…. All new development should minimise surface water run-off, including through Sustainable Drainage Systems (SUDS) and the appropriate use of Green Infrastructure. Developers should have regard to the surface water run-off rates in the SFRA User Guide. In CDAs, evidence to justify the surface water run-off approach /

rates will be required.

Policy EN17 - Water Quality

…. Development should minimise surface water run-off from development and associated roads, and maximise the use of appropriate sustainable drainage systems, to minimise groundwater contamination, and to avoid pollutants reaching watercourses'

Consultation

A pre-development enquiry was submitted to United Utilities in October 2022. In their response (Appendix D) UU have stated that:

'Foul Water
Foul flow from this site will be allowed to drain into the public foul water/combined sewer system.

Our preferred point of discharge would be to the 525mm diameter public combined sewer located South West of your proposed development at an unrestricted rate.

If you are able to identify an alternative, more suitable point of discharge, we request that you contact us at your earliest convenience so that we can assess suitability.

Surface Water
All surface water flow from the proposed development should drain in-line with the drainage hierarchy, as outlined in Paragraph 80, (Reference ID: 7-080-20150323), of the National Planning Practice Guidance. We also recommend you prioritise the use of multi-functional sustainable drainage systems for the management of surface water in accordance with national planning policy.

Public Sewer
In accordance with the hierarchy of drainage options within the National Planning Practice Guidance, both discharge to ground via infiltration and discharge to a waterbody should be discounted prior to consideration of discharging surface water to the public sewer system. Evidence should be provided to demonstrate how these have been discounted, as outlined in the North West SuDS pro-forma.

Once evidence is provided as outlined above, United Utilities will consider a connection to the 450mm diameter public surface water sewer within the boundary of the proposed site at a pass forward flow to be agreed by the Lead Local Flood Authority. United Utilities request that any agreed rate does not exceed 5l/s. This is based of the peak greenfield flow rate, utilising the most impermeable soil type via the HR Wallingford Greenfield estimation tool.

As a Water Company, we have no obligation to accept highway drainage into our public sewer network. However, should your proposals include runoff from highways, we would request that consideration is given to SuDS components that deliver source control are incorporated within the design of the scheme to reduce the volume and frequency of discharges of these flows to the public sewer.'

A consultation request was submitted to the LLFA in October 2022. In their response (Appendix F), the LLFA have advised that they have no objection in principle to a discharge to the public surface water sewer via the existing 375mm surface water drain on site. The LLFA expect surface water runoff to be restricted to greenfield rates or by at least 50% reduction from the existing rates where appropriate.

Surface Water Management

The site currently comprises hardstanding which forms part of the supermarket (Tesco) car park. Surface water currently drains to the public surface water sewer network via a 375mm pipe in the north-western extent of the site.

The proposed development will include 0.207ha of new formally drained hardstanding.

The Manchester City Council 'SuDS Requirements for New Developments' guidance (2019) states that *'For Brownfield site developments… details of surface water attenuation that offers a reduction in surface water runoff rate in line with the Manchester Trafford and Salford Strategic Flood Risk Assessment, i.e. at least a 50% reduction in runoff rate compared to the existing rates with an aim to reduce to Greenfield runoff rates wherever practicable'.*

Existing brownfield runoff rates have been estimated using the modified rational method Q=CiA, whereby:

- Q is the peak discharge (l/s)
- C is the dimensionless coefficient (2.78)
- i is the average rainfall intensity derived from FEH point data for a 6 hour storm event
- A is the contributing drainage area (0.261ha – excludes existing hardstanding in eastern extent of the site which will be retained and continue to drain as existing).

A summary of the existing brownfield runoff rates is provided in Table 1.

Table 1 – Existing Brownfield Runoff Rates

Storm Event (Year)	Rainfall Intensity (mm)	Runoff Rate (l/s)
1	18.3	13.28
30	48.7	33.34
100	66.2	48.03

A 50% reduction in the existing 1 in 1 year runoff rate would equate to a proposed discharge rate of 6.6 l/s. However, UU have stipulated that the discharge rate does not exceed 5 l/s. A discharge rate of 5 l/s is therefore proposed for the development and will provide 62% betterment over the existing 1 in 1 year

brownfield runoff rate.

Discharge Method

Paragraph 056 of the NPPG: Flood Risk and Coastal Change sets out the following hierarchy of drainage options: into the ground (infiltration); to a surface water body; to a surface water sewer, highway drain or another drainage system; to a combined sewer.

Infiltration

The first consideration for the disposal of surface water is infiltration (soakaways and permeable surfaces).

A 'Site Investigation Report' by Crossfield Consulting Ltd was conducted in March 2021 and summarises that '*Due to the presence of relatively deep Made Ground and shallow groundwater, it is considered that soakaway drainage is unlikely to be feasible and an alternative drainage solution should be identified'.*

As such, infiltration techniques are not considered suitable for the site.

Watercourse

There are no watercourses within immediate vicinity of the site. As such, discharge to watercourse is not a feasible option.

Sewer

A connection to the public sewer system is the final consideration. It is proposed to discharge to the 450mm public surface water sewer north-west of the site via the existing 375mm surface water drain within the site. Manhole S8 on the 375mm surface water drain in the north-western extent of the site has an invert level of 30.10m AOD. As such, a gravity connection can be achieved. Discharge will be made at a rate of 5 l/s.

Attenuation Storage

In order to achieve a discharge rate of 5 l/s, attenuation storage will be required. MicroDrainage network simulations are included in Appendix G and demonstrate that the proposed drainage system can accommodate the 1 in 100 year plus 45% Climate Change (CC) event.

Sustainable Drainage Systems

Attenuation storage should be provided in the form of Sustainable Drainage Systems (SuDS) where practical.

Given the space limitations on site (majority of the site occupied by hardstanding), attenuation storage will be provided in the form of an underground attenuation tank located beneath the car park.

An attenuation storage tank measuring 12m long x 4m wide x 2m deep with a void ratio of 95% is proposed and would provide up to 91.2m^3 of storage. The remaining storage volume will be provided within manhole chambers and the piped drainage network.

Concept Surface Water Drainage Scheme

Surface water will be discharged to the 450mm public surface water sewer north-west of the site via an

existing 375mm surface water drain. Discharge will be made at a limited rate of 5 l/s and a gravity connection can be achieved. Surface water runoff up to the 1 in 100 year plus 45% climate change allowance event will be attenuated on site. Attenuation storage will be provided in the form of underground tank located beneath the car park. Attenuation will also be provided within manhole chambers and the piped drainage network.

The proposed surface water drainage scheme will ensure no increase in runoff over the lifetime of the development and will create betterment over the existing drainage.

Exceedance Event

Storage will be provided for the 1 in 100 year plus 45% CC event. Storm events in excess of the 1 in 100 year plus 45% CC event should be permitted to produce temporary shallow depth flooding within the car park and landscaped areas. Finished floor levels will be set at a minimum of 150mm above surrounding ground levels ensuring exceedance flooding will not affect the building.

Surface Water Treatment

In accordance with the CIRIA C753 publication 'The SuDS Manual' (2015), other roofs (applicable to commercial roofs) are classified as having a 'low' pollution hazard level. Non-residential car parks with frequent change are classified as having a 'medium' pollution hazard level. Table 1 shows the pollution hazard indices for each land use.

Table 2 – Pollution Hazard Indices

Land Use	Pollution Hazard Level	Total Suspended Solids (TSS)	Metals	Hydrocarbons
Other roofs (typical commercial /industrial roofs)	Low	0.3	0.2	0.05
Car parking with frequent change	Medium	0.7	0.6	0.7

Table extract taken from the CIRIA C753 publication 'The SuDS Manual' – Table 26.2

* Indices values range from 0-1.

Runoff from roofs and the car park will be directed to an attenuation tank beneath the car park. Treatment will be provided by a suitably sized filtration unit / propriety treatment system placed upstream of the attenuation storage tank.

Maintenance

Maintenance of private drainage features such as an attenuation tank will be the responsibility of the site owner. A maintenance schedule for an attenuation tank is included in Appendix H.

Foul Drainage

Correspondence from UU (Appendix D) states that *'Our preferred point of discharge would be to the 525mm diameter public combined sewer located South West of your proposed development at an unrestricted rate.'*

It is proposed to discharge foul flows to the 525mm public combined sewer south-west of the site via an existing 150mm foul drain located adjacent to the Tesco Petrol Filling Station (at manhole F7). Foul manhole F7 has a cover level of 32.87m AOD and an invert level of 31.25m AOD. As such, a gravity connection can be achieved.

Conclusions

The proposed development is for the erection of a single storey building to form mixed restaurant and hot food takeaway use (sui generis), incorporating a 'drive-thru' facility, car and cycle parking, the creation of a new pedestrian and cycle footpath link into the site from Altrincham Road and associated landscaping within part of existing supermarket car park.

The proposed development will include impermeable drainage area in the form of the building, car park and access.

All methods of surface water discharge have been assessed. Infiltration techniques are not possible due to the presence of relatively deep Made Ground and shallow groundwater. There are no watercourses in the immediate vicinity of the site. Therefore, surface water will be discharged to the existing 375mm surface water drain on site, which discharges to the 450mm public surface water sewer north-west of the site. A gravity connection appears feasible. UU have stipulated a discharge rate of 5 l/s.

Attenuation storage will be required on site in order to restrict surface water discharge to 5 l/s. Attenuation storage will be provided in the form of an underground attenuation tank located beneath the car park.

Foul flows generated from the proposed development will be discharged to the 525mm public combined sewer south of the site, via an existing 150mm foul sewer adjacent to the Tesco petrol filling station. A gravity connection can be achieved.

A Concept Designer's Risk Assessment (cDRA) has been prepared to inform future designers of any identified hazards associated with the scheme. The cDRA has been included in Appendix I.

Recommendations

1. Submit this Drainage Strategy to the Planning Authority in support of the Planning Application.

Appendix A Location Plan and Aerial Image

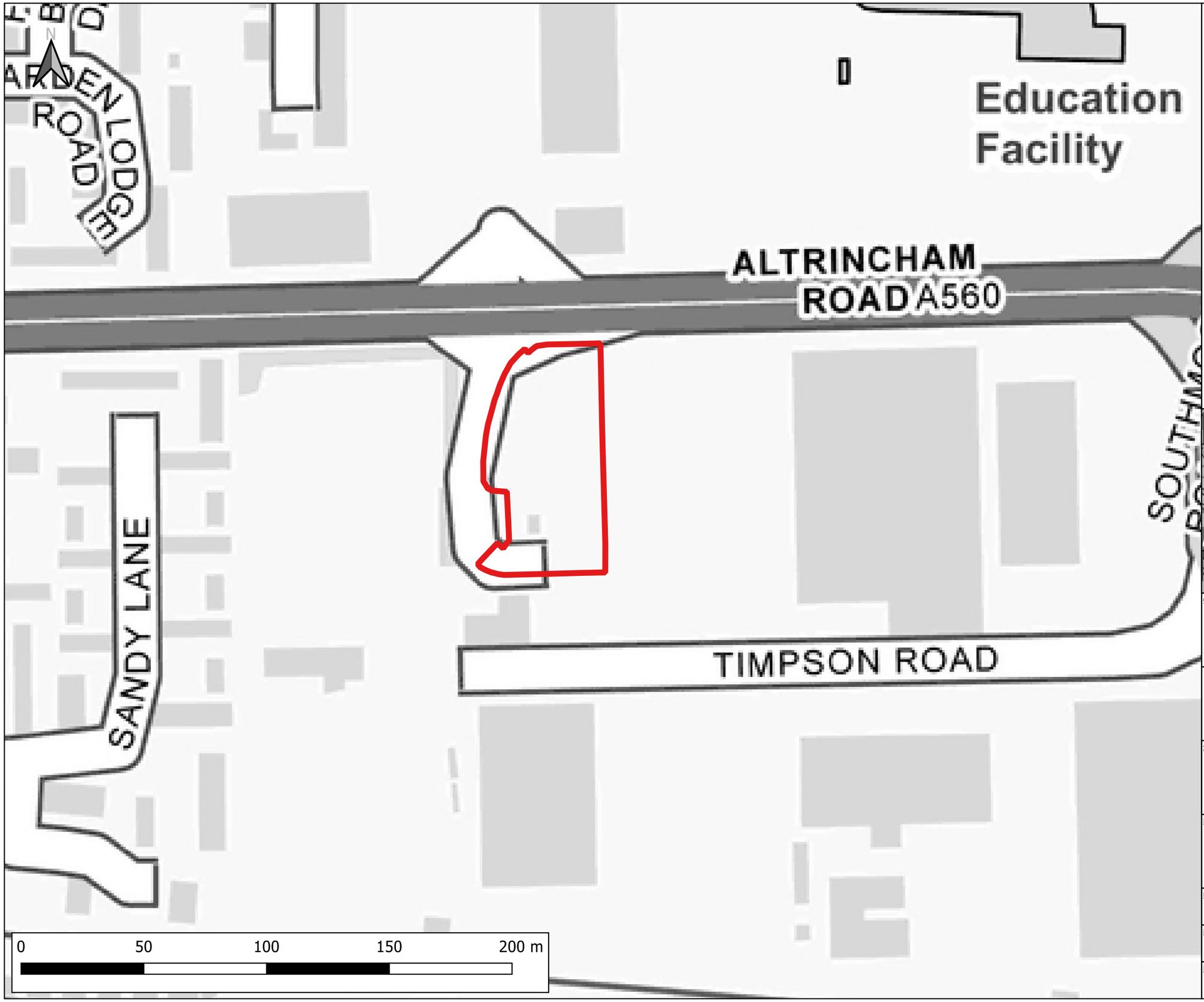

Notes:
1) All dimensions are in metres and all levels in metres above Ordnance Datum unless stated otherwise

LEGEND

- Site Boundary
- Watercourses
- Waterbodies

CLIENT: Chicken Cabins ltd			
waterco www.waterco.co.uk			
SCHEME: Altrincham Road, Manchester			
PLOT TITLE: Location Plan			
PLOT STATUS: FINAL			DATE: 02-11-2022
DRAWN: MW	CHECKED: AW	APPROVED: NJ	PLOT SCALE AT A3: 1:1500
PLOT NAME: _Location_Plan			REVISION: -

CONTAINS OS DATA © CROWN COPYRIGHT (2022)

Notes:
1) All dimensions are in metres and all levels in metres above Ordnance Datum unless stated otherwise

LEGEND

Site Boundary

CLIENT:	Chicken Cabins ltd
	waterco www.waterco.co.uk
SCHEME:	Altrincham Road, Manchester
PLOT TITLE:	Aerial Plan
PLOT STATUS:	FINAL
DATE:	02-11-2022
DRAWN:	MW
CHECKED:	AW
APPROVED:	NJ
PLOT SCALE AT A3:	1:1500
PLOT NAME:	_Aerial_Plan
REVISION:	-

CONTAINS OS DATA © CROWN COPYRIGHT (2022)
BASEMAP: WORLD IMAGERY. SOURCES: ESRI, DIGITALGLOBE, GEOEYE, I-CUBED, EARTHSTAR GEOGRAPHICS, CNES/AIRBUS DS, USDA, USGS, AEX, GETMAPPING, AEROGRID, IGN, IGP, SWISSTOPO, GIS USER COMMUNITY

Appendix B Topographical Data

DO NOT SCALE THIS DRAWING. IF IN DOUBT ASK

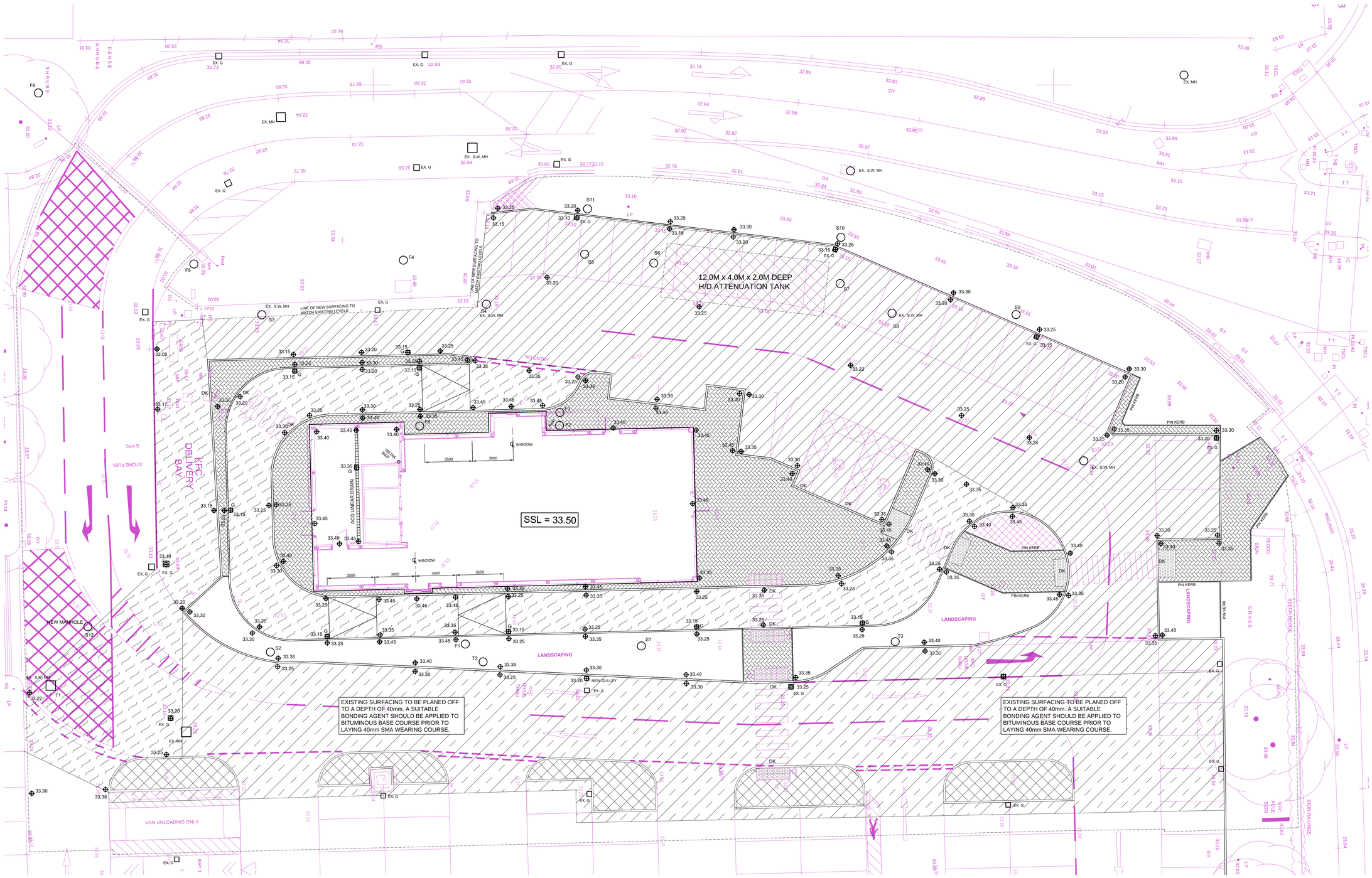

SITE LAYOUT PLAN (1:100)

NOTES

AO

LEGEND

- 33.25 — DENOTES PROPOSED LEVEL
- 32.95 — DENOTES EXISTING LEVEL
- D/K — DENOTES DROP KERB WITH TACTILE PAVING
- G — ROAD GULLY
- DENOTES BITUMINOUS FINISH LIGHT DUTY
- DENOTES BITUMINOUS FINISH HEAVY DUTY
- DENOTES PAVED AREA
- DENOTES BITUMINOUS FINISH TO PEDESTRIAN AREAS
- DENOTES EXISTING SURFACING TO BE PLANED OFF TO A DEPTH OF 40mm. A SUITABLE BONDING AGENT SHOULD BE APPLIED TO BITUMINOUS BASE COURSE PRIOR TO LAYING 40mm SMA WEARING COURSE.

Rev.	Description	By	Date
D	SIZE & LOCATION OF ATTENUATION TANK REVISED LOCATION OF MANHOLES MOVED TO SUIT.	NC	APR 24
C	SIZE OF ATTENUATION TANK & LOCATION OF MANHOLES S6 & S7 REVISED.	NC	NOV 22
B	MH F1 MOVED TO AVOID CANOPY FOUNDATION	NC	FEB 22
A	MINOR MODIFICATIONS TO LAYOUT & FINISHES.	NC	FEB 22

Client
CHICKEN CABINS LTD.

Site address
KFC DRIVE THROUGH
SECTION OF TESCO CAR PARK
ALTRINCHAM ROAD, BAGULEY.
MANCHESTER, M23 9TJ.

Stevenson Calam Associates
CONSULTING ENGINEERS
ORNHAMS HALL, BOROUGHBRIDGE,
NORTH YORKSHIRE, YO51 9JH.
Telephone (01423) 530999
Facsimile (01423) 520028
Email: stevenson.calam@btconnect.com

Title
EXTERNAL WORKS
(SHEET 1 OF 2)

Project Manager/ Checked	Drawn By	Scale	Date
GS	NC	AS SHOWN	FEB. 2022

Drawing Number 1747-4/3 — Rev. D

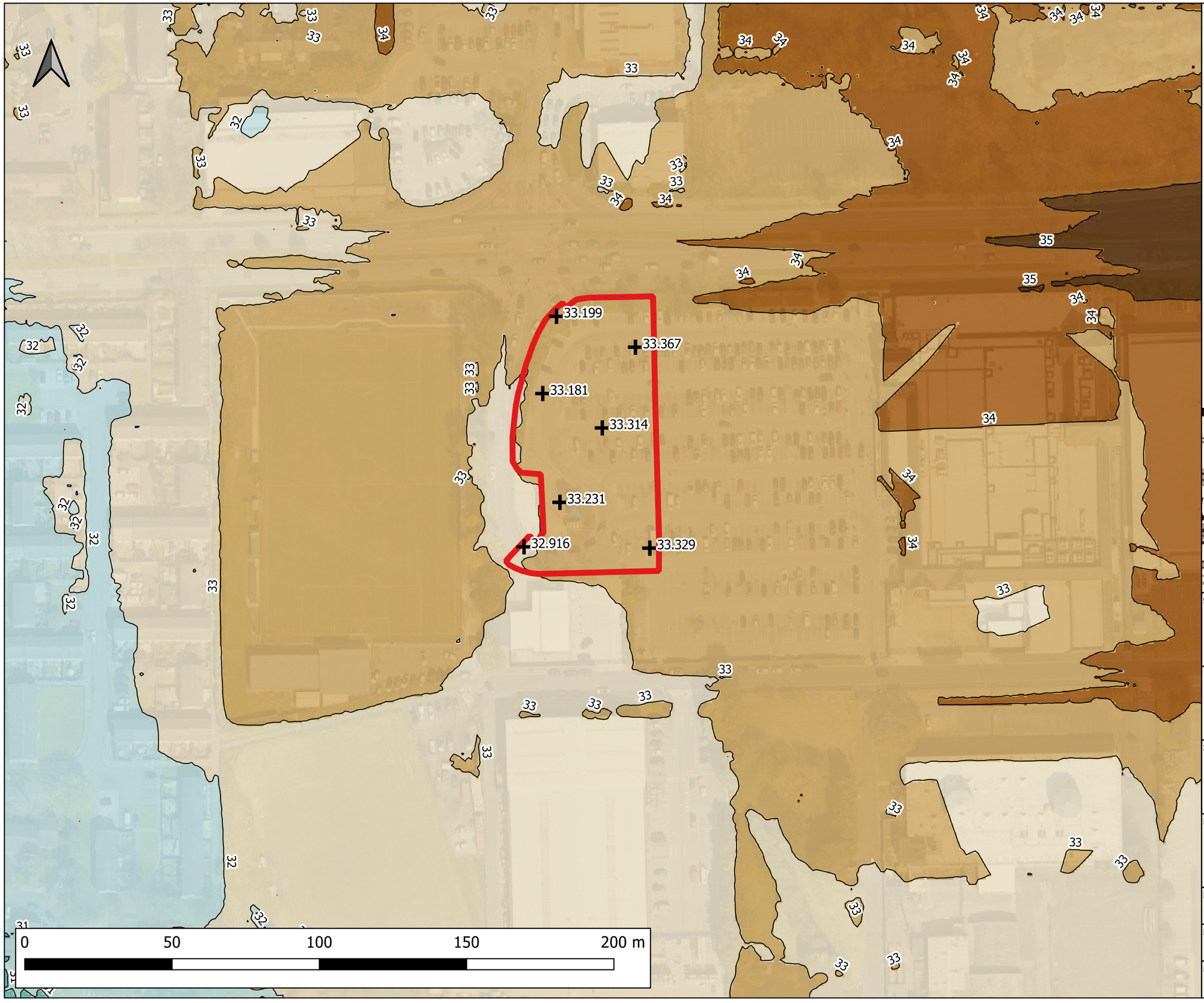

Notes:
1) All dimensions are in metres and all levels in metres above Ordnance Datum unless stated otherwise

LEGEND

Site Boundary

Site Levels (m AOD)

Ground Elevations (m AOD)

- <= 31.0
- 31.0 - 32.0
- 32.0 - 33.0
- 33.0 - 34.0
- 34.0 - 35.0
- > 35.0

CLIENT:
Chicken Cabins Ltd

waterco
www.waterco.co.uk

SCHEME:
Altrincham Road, Manchester

PLOT TITLE:
LiDAR Plan
1m Resolution
Data from Environment Agency

PLOT STATUS:	DATE:
FINAL	02-11-2022

DRAWN:	CHECKED:	APPROVED:	PLOT SCALE AT A3:
MW	AW	NJ	1:1200

PLOT NAME:	REVISION:
_LiDAR_Plan	-

CONTAINS OS DATA © CROWN COPYRIGHT (2022)
© ENVIRONMENT AGENCY COPYRIGHT AND/OR DATABASE RIGHT (2022). ALL RIGHTS RESERVED

Appendix C Historical BGS Borehole Record

Norwest Holst Soil Engineering Ltd.

Borehole No. **7**

BOREHOLE LOG

Contract No. F8108
Location Altrincham Road, Baguley
Client Curtins
Method of Boring Percussion
Diameter of Borehole 150mm

Sheet 1 of 1
Chainage
Ground Level m.A.O.D.
Date 28/9/88

Description of Strata	Legend	Depth Below G.L.(m)	O.D. Level (m)	Casing Depth at Sampling	Sampling and Coring	"N"/ R.Q.D.%	Daily Progress
REINFORCED CONCRETE		0.40					
MADE GROUND: Grey silty sand		1.20			1.00	22	
MADE GROUND: Brick rubble, sand and stones.		1.50					
Medium dense dark brown SAND		2.00			2.00	19	
Medium dense light brown medium SAND, becoming loose		3.80			3.00	6**	
Completely weathered brown clayey KEUPER MARL		4.30			4.20	49	
Weathered red/brown KEUPER MARL		6.00			5.10	50 for 75mm*	
					6.00	50 for 15mm*	

Type of Sample

- Is S.P.T.
- Ic. C.P.T.
- O Jar
- ● Bulk
- ■ Undisturbed
- × Vane
- Δ Water
- Piezometer

Remarks (Observations of Ground Water etc.) * Seating blows only

Water struck at 3.00m, level rose after 20 mins to 4.00m
Sealed by casing at 4.00m
** possibly disturbed due to groundwater conditions

Water levels are subject to seasonal or tidal variations and should not be taken as constant

British Geological Survey

Appendix D UU Sewer Plan & Correspondence

United Utilities
Water for the North West

How to contact us:

United Utilities Water Limited
Property Searches
Haweswater House
Lingley Mere Business Park
Great Sankey
Warrington
WA5 3LP

Telephone: 0370 7510101

E-mail: propertysearches@uuplc.co.uk

Waterco

Waterco
Eden Court, Lon Parcwr Business Estate
Ruthin, Denbighshire
LL15 1NJ

FAO:

Your Ref: 14948 - Altrincham Road, Manchester
Our Ref: UUPS-ORD-442153
Date: 26/10/2022

Dear Sirs

Location: Altrincham Road Manchester

I acknowledge with thanks your request dated 24/10/2022 for information on the location of our services.

Please find enclosed plans showing the approximate position of United Utilities' apparatus known to be in the vicinity of this site.

The enclosed plans are being provided to you subject to the United Utilities terms and conditions for both the wastewater and water distribution plans which are shown attached.

If you are planning works anywhere in the North West, please read United Utilities' access statement before you start work to check how it will affect our network. http://www.unitedutilities.com/work-near-asset.aspx .

I trust the above meets with your requirements and look forward to hearing from you should you need anything further.

If you have any queries regarding this matter please contact us .

Yours Faithfully,

Karen McCormack
Property Searches Manager

United Utilities Water Limited
Registered In England & Wales No. 2366678
Registered Office Haweswater House, Lingley Mere Business Park,
Lingley Green Avenue, Great Sankey, Warrington, WA5 3LP

Water for the North West

TERMS AND CONDITIONS - WASTEWATER AND WATER DISTRIBUTION PLANS

These provisions apply to the public sewerage, water distribution and telemetry systems (including sewers which are the subject of an agreement under Section 104 of the Water Industry Act 1991 and mains installed in accordance with the agreement for the self construction of water mains) (UUWL apparatus) of United Utilities Water Limited "(UUWL)".

TERMS AND CONDITIONS:

- This Map and any information supplied with it is issued subject to the provisions contained below, to the exclusion of all others and no party relies upon any representation, warranty, collateral contract or other assurance of any person (whether party to this agreement or not) that is not set out in this agreement or the documents referred to in it.
- This Map and any information supplied with it is provided for general guidance only and no representation, undertaking or warranty as to its accuracy, completeness or being up to date is given or implied.
- In particular, the position and depth of any UUWL apparatus shown on the Map are approximate only. UUWL strongly recommends that a comprehensive survey is undertaken in addition to reviewing this Map to determine and ensure the precise location of any UUWL apparatus. The exact location, positions and depths should be obtained by excavation trial holes.
- The location and position of private drains, private sewers and service pipes to properties are not normally shown on this Map but their presence must be anticipated and accounted for and you are strongly advised to carry out your own further enquiries and investigations in order to locate the same.
- The position and depth of UUWL apparatus is subject to change and therefore this Map is issued subject to any removal or change in location of the same. The onus is entirely upon you to confirm whether any changes to the Map have been made subsequent to issue and prior to any works being carried out.
- This Map and any information shown on it or provided with it must not be relied upon in the event of any development, construction or other works (including but not limited to any excavations) in the vicinity of UUWL apparatus or for the purpose of determining the suitability of a point of connection to the sewerage or other distribution systems.
- No person or legal entity, including any company shall be relieved from any liability howsoever and whensoever arising for any damage caused to UUWL apparatus by reason of the actual position and/or depths of UUWL apparatus being different from those shown on the Map and any information supplied with it.
- If any provision contained herein is or becomes legally invalid or unenforceable, it will be taken to be severed from the remaining provisions which shall be unaffected and continue in full force and affect.
- This agreement shall be governed by English law and all parties submit to the exclusive jurisdiction of the English courts, save that nothing will prevent UUWL from bringing proceedings in any other competent jurisdiction, whether concurrently or otherwise.

United Utilities Water Limited
Registered In England & Wales No. 2366678
Registered Office Haweswater House, Lingley Mere Business Park,
Lingley Green Avenue, Great Sankey, Warrington, WA5 3LP

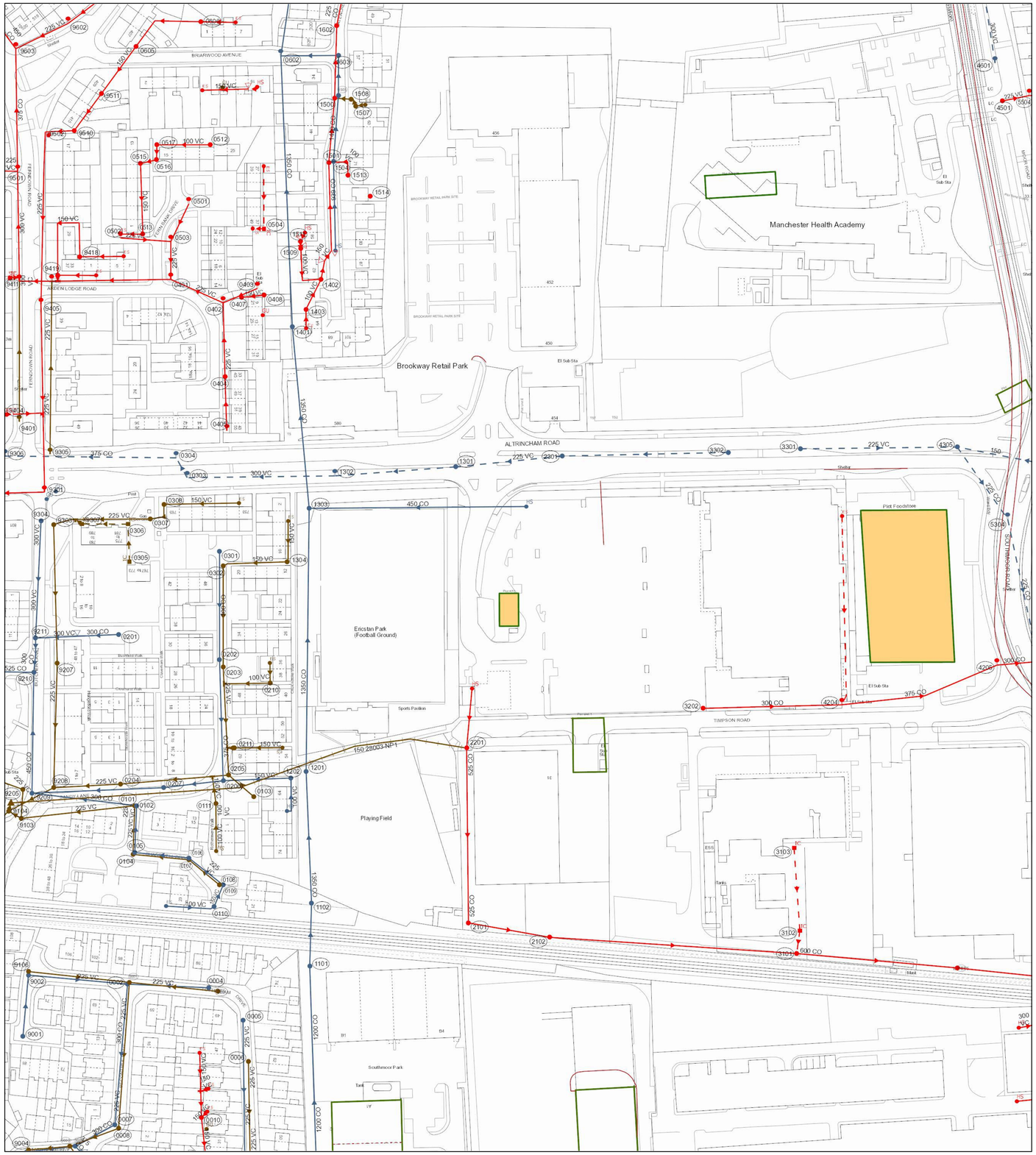

The position of the underground apparatus shown on this plan is approximate only and is given in accordance with the best information currently available. United Utilities Water will not accept liability for any loss or damage caused by the actual position being different from those shown.

Crown copyright and database rights 2017 Ordnance Survey 100022432. Unauthorised reproduction will infringe these copyrights.

Refno	Cover	Func	Invert	Size x	Size y	Shape	Matl	Length	Grad
9419		CO		150			VC	3.295734	
0513		CO		150			VC	12.27678	
4601	32.12	SW	30.3	300			VC	122.4827	1 in 236
1501		CO	0	939			CO	35.89843	
1504		SW	0	1400			CO	36.8075	
1507		FO		100			VC	5.11126	
1301	33.2	SW	31.31	225			VC	67.18631	1 in 140
3302	34.68	SW	32.52	225			VC	32.02174	1 in 123
4305	35.34	SW		225			CO	48.82622	
4501	32.59	CO	31.02	225			VC	15.29706	1 in 191
1401	33.01	SW	25.89	1350			CO	150.2864	1 in 501
1603		SW	0	1400			CO	31.97307	
4205	34.74	CO	30.07	300			CO	23.08679	1 in 257
0202	31.84	SW	29.95	375			CO	67.11701	1 in 320
0308		FO		150			VC	14.68992	
0110	31.38	SW	30.46	150			VC	13	1 in 325
0108	31.47	FO	29.64	225			VC	22.02271	1 in 130
0109	31.47	SW	30.35	225			VC	24.20744	1 in 186
0106	31.35	SW	30.19	225			VC	30.14963	1 in 144
0404	32.56	CO	30.55	225			VC	41.01219	1 in 195
0403	32.49	CO	30.71	225			VC	20.61553	1 in 64
9403	31.57	CO	28.54	225			VC	18	1 in 129
0503	32.32	CO	30.22	225			VC	21	1 in 162
0515		CO		150			VC	39.17903	
9511		CO		150			VC	25.54277	
9305	31.85	FO	29.69	225			VC	96.00521	1 in 84
9103	32.82	FO	26.03	225			VC	8.062258	
9106	31.89	FO	30.34	225			VC	56.32051	1 in 128
0001	31.55	FO	29.88	225			VC	81.22192	1 in 246
0008	31.93	FO	29.53	225			VC	28.79236	1 in 221
9003	31.99	FO	29.38	225			VC	23.08679	1 in 178
0006	31.61	FO	30.17	225			VC	56.00893	1 in 181
0401	32.5	CO	30.07	225			VC	66.00761	1 in 44
0303	31.98	SW	30.26	375			CO	12.52996	
1500		CO	0	939			CO	40.31477	
1201	32.49	SW	26.17	1350			CO	145.9875	1 in 1123
2101	32.8	CO	30.47	525			CO	45.70558	
4204	34.04	CO	30.62	375			CO	89.73357	1 in 187
5304	35.06	SW	32.02	225			CO	80.80842	1 in 95
1302	32.8	SW	30.78	300			VC	82.0061	1 in 164
1402		CO		100			VC	10.3686	
9603	31.21	CO	26.25	450			CO	60.80296	1 in 338
9401	31.7	FO	29	225			VC	78	1 in 132
9406	31.44	CO	29.05	225			VC	104.0192	1 in 347
9306	31.73	SW	29.89	375			CO	109.6358	1 in 365
9210	31.65	SW	29.03	525			CO	60.00833	1 in 300
9209	32.16	SW	29.31	450			CO	67.00746	1 in 305
9207	31.49	FO	28.6	225			VC	69.02898	1 in 177
9104	32.8	FO	0	100			PVC	4.763103	
9205	32.24	FO	26.17	225			VC	16.03122	1 in 123
0002	31.55	SW	30.14	300			CO	78.31347	1 in 340
0007	31.9	SW	29.89	300			CO	25.05993	1 in 125
9005	31.98	SW	29.59	450			CO	27.16615	1 in 2717
1202		SW		150			VC	37.44806	
0003	31.61	FO	30.6	225			VC	49.25444	1 in 70
3101	31.89	CO	30.09	600			CO	89.35883	
4101		CO	0	600			CO	105.5746	
0505	31.59	SW	30.39	225			VC	78.00641	1 in 488
2301	33.9	SW	31.75	225			VC	59.3043	1 in 141
5504	32.71	CO	30.72	450			CO	35	1 in 90
9602	31.25	CO	27.88	225			VC	32.20248	1 in 24
1304		FO		150			VC	36.62397	
0408		CO		150			VC	12.47314	
1508		FO		100			VC	9.193957	
1602		CO	0	225			CO	37.28763	
1505		SW	0	1400			CO	22.19921	
1102	31.96	SW	26.24	1350			CO	73.06161	1 in 1461
2102		CO	0	600			CO	137.2953	
0602	31.01	SW	25.57	1400			CO	136.4734	
0302	31.87	FO	29.57	225			VC	56	1 in 140
0516		CO		150			VC	9.138899	
0512		CO		100			VC	29.55688	
0405	32.53	CO	31.01	225			VC	30.01666	1 in 65
0107	31.36	FO	29.45	225			VC	31.14482	1 in 111
0111		FO		150			VC	15.14041	
0205	31.35	FO	28.75	225			VC	60.20797	1 in 241
0211		FO		150			VC	4.008582	
1403		CO		100			VC	18.70299	
9418		CO		150			VC	59.79578	
0502	32.2	CO	30.39	225			VC	28.07134	1 in 175
9510		CO		150			VC	16.10588	
9301	31.44	CO	28.73	225			VC	42.0119	1 in 525
9211	31.65	SW	29.56	300			VC	9	1 in 82
9208	31.64	FO	28.13	225			VC	28.17801	
0101	31.37	SW	29.8	300			CO	58.42089	1 in 154
0104	31.36	FO	29.15	225			VC	27.01851	1 in 90
0105	31.38	SW	29.96	225			VC	26.01922	1 in 186
9001	32.14	SW	30.9	225			VC	34.1321	1 in 114
9002	31.9	SW	30.52	225			VC	55.22681	1 in 153
9004	31.83	FO	29.22	225			VC	27.58623	1 in 172
0206	31.29	SW	29.72	375			CO	33.38205	1 in 196
0004	31.61	SW	30.31	225			VC	45.04442	1 in 300
1513		CO		100			VC	17.88768	
3301	35.04	SW	33.29	225			VC	87.00574	
2201	32.72	CO	30.69	525			CO	97.00516	1 in 485
3202		CO	0	300			CO	77.02608	
0203	31.85	FO	29.15	225			VC	60.07495	1 in 182
0210		FO		100			VC	25.59155	
0606		CO		150			VC	43.15915	
0301	31.87	SW	30.32	300			CO	60	1 in 171
0501	31.9	CO	30.32	225			VC	23.25941	1 in 291
1303	32.95	SW	26.02	1350			CO	101.3005	1 in 921
0103	31.26	FO	29.15	225			VC	18.43909	1 in 61
0402	32.7	CO	30.32	225			VC	31.7805	1 in 138
1509		CO		100			VC	26.16656	
9402	31.46	CO	28.39	300			VC	61.0082	1 in 36
9501	31.57	CO	26.53	375			CO	68.00735	1 in 400
9502	31.52	CO	29.28	225			VC	95.82847	1 in 504
0517		CO		100			VC	8.284367	
0605		CO		150			VC	32.35877	
0304	32.08	SW	30.24	375			CO	95.00526	1 in 288
9304	31.53	SW	29.95	300			VC	65.06919	1 in 176
9303	31.57	FO	28.95	225			VC	77.02597	1 in 233
0307		FO		225			VC	53.92669	
0201	31.26	SW	29.9	300			CO	23.02173	1 in 144
0204	31.33	FO	28.48	225			VC	37.05402	1 in 154
0102	31.37	FO	28.83	225			VC	63.3877	1 in 23
0207	31.24	SW	29.53	450			CO	73.06161	1 in 406
1101	32.79	SW	26.42	1350			CO	35.01428	1 in 219
0010		CO		150			VC	29.56281	

Refno	Cover	Func	Invert	Size x	Size y	Shape	Matl	Length	Grad

LEGEND

Abandoned — Foul — Surface Water — Combined

- Public Sewer
- Private Sewer
- Section 104
- Rising Main
- Sludge Main
- Overflow
- Water Course
- Highway Drain

All point assets follow the standard colour convention:
red - combined, blue - surface water, brown - foul, purple - overflow

- Manhole
- Head of System
- Extent of Survey
- Rodding Eye
- Inlet
- Discharge Point
- Vortex
- Penstock
- Washout Chamber
- Valve
- Air Valve
- Non Return Valve
- Soakaway
- Gully
- Cascade
- Flow Meter
- Hatch Box
- Oil Interceptor
- Summit
- Drop Shaft
- Orifice Plate
- Side Entry Manhole
- Outfall
- Screen Chamber
- Inspection Chamber
- Bifurcation Chamber
- Lamp Hole
- T Junction / Saddle
- Catchpit
- Valve Chamber
- Vent Column
- Vortex Chamber
- Penstock Chamber
- Network Storage Tank
- Sewer Overflow
- Ww Treatment Works
- Ww Pumping Station
- Septic Tank
- Control Kiosk
- Change of Characteristic

MANHOLE FUNCTION

- FO Foul
- SW Surface Water
- CO Combined
- OV Overflow

SEWER SHAPE

- CI Circular
- EG Egg
- OV Oval
- FT Flat Top
- RE Rectangular
- SQ Square
- TR Trapezoidal
- AR Arch
- BA Barrel
- HO HorseShoe
- UN Unspecified

SEWER MATERIAL

- AC Asbestos Cement
- BR Brick
- PE Polyethylene
- RP Reinforced Plastic Matrix
- CO Concrete
- CSB Concrete Segment Bolted
- CSU Concrete Segment Unbolted
- CC Concrete Box Culverted
- PSC Plastic / Steel Composite
- GRC Glass Reinforced Plastic
- DI Ductile Iron
- PVC Polyvinyl Chloride
- CI Cast Iron
- SI Spun Iron
- ST Steel
- VC Vitrified Clay
- PP Polypropylene
- PF Pitch Fibre
- MAC Masonry, Coursed
- MAR Masonry, Random
- U Unspecified

Address or Site Reference:

Altrincham Road Manchester,

Scale: 1:1250 **Date:** 26/10/2022

Sheet: 1 of 1

Printed by: Property Searches

SEWER RECORDS

United Utilities
Water for the North West

Megan Williams

From: wastewaterdeveloperservices@uuplc.co.uk
Sent: 24 October 2022 10:10
To: Megan Williams
Subject: Pre Development Enquiry for: Altrincham Road, Manchester, M23 9TJ UU Reference Number : 02949510

Good Morning, Megan

Pre Development Enquiry for: Altrincham Road, Manchester, M23 9TJ UU Reference Number : 02949510

We have carried out an assessment of your application which is based on the information provided. This pre-development advice on your drainage strategy will be valid for 12 months. Your drainage strategy will need to be reviewed by other competent authorities as part of the planning process, and we advise that you carry out the necessary site investigations to confirm the viability of your proposals.

If your investigations require access to our public sewer network, we ask that you contact our network engineers with a request for an access certificate via our main contact telephone number 0345 6723 723 or refer to the link below:

https://www.unitedutilities.com/builders-developers/working-near-our-assets/

Foul Water

Foul flow from this site will be allowed to drain into the public foul water/combined sewer system.

Our preferred point of discharge would be to the 525mm diameter public combined sewer located South West of your proposed development at an unrestricted rate.

If you are able to identify an alternative, more suitable point of discharge, we request that you contact us at your earliest convenience so that we can assess suitability.

In accordance with our infrastructure plans we may ask you to change your point of connection. Therefore please contact us when you are ready to formalise your drainage proposals, we would suggest before you submit for Full Planning.

Surface Water

All surface water flow from the proposed development should drain in-line with the drainage hierarchy, as outlined in Paragraph 80, (Reference ID: 7-080-20150323), of the National Planning Practice Guidance. We also recommend you prioritise the use of multi-functional sustainable drainage systems for the management of surface water in accordance with national planning policy.

Generally, the aim should be to discharge surface run off as high up the following hierarchy of drainage options as reasonably practicable.
This is outlined as follows, in order of priority:

1. **into the ground (infiltration);**
2. **to a surface waterbody;**
3. **to a surface water sewer or highway drain;**

4. **to a combined sewer.**

For guidance, The **North West SuDS Pro-Forma** provides information on the appropriate evidence required at each stage of the hierarchy, to demonstrate how each level has been discounted.

The Lead Local Flood Authority has responsibility for all surface water drainage concerns and their input to your proposal is critical. You should also consider whether it is necessary to discuss your proposal with the Environment Agency, or Internal Drainage Board (if operating in your area).

The Local Planning Authority are the determining authority for any application for planning permission and the appropriate authority for determining cost viability of a proposed drainage scheme, such assessments are outside of the jurisdiction of United Utilities.

Infiltration

Surface water runoff generated from this development should discharge to the ground via infiltration system where feasible.

A detailed evidence based feasibility assessment must be carried out in line with Chapter 25 of the CIRIA SuDS Manual 2015 to determine whether infiltration is a suitable method of surface water disposal.

Particular attention must be paid to Ground Water Source Protection Zones to ensure that the risk of pollution to these valuable resources is not compromised. Details can be obtained from the government website:

https://www.gov.uk/guidance/groundwater-source-protection-zones-spzs#find-groundwater-spzs

If your site is in a Groundwater Source Protection Zone, you should have regard to the Environment Agency's approach to Groundwater Protection. Information on this is available via the link below:

https://www.gov.uk/government/publications/groundwater-protection-position-statements

Please note that such a location could have implications for the principle of your development and the need for additional mitigating measures to protect the groundwater environment and public water supply in the detailed design of your site.

.

Highway Drainage

If an evidence based assessment has been carried out and confirms that infiltration is not feasible, we recommend that you investigate the possibility of draining surface water to the highway drain where this ultimately discharges to a watercourse, by contacting the relevant Highway Authority.

There is a 225mm highway drain to the North in Altrincham Road, that discharges to a 375mm public surface water sewer before outfalling to Sinderland Brook.

Public Sewer

In accordance with the hierarchy of drainage options within the National Planning Practice Guidance, both discharge to ground via infiltration and discharge to a waterbody should be discounted prior to consideration of discharging surface water to the public sewer system. Evidence should be provided to demonstrate how these have been discounted, as outlined in the North West SuDS pro-forma.

Once evidence is provided as outlined above, United Utilities will consider a connection to the 450mm diameter public surface water sewer within the boundary of the proposed site at a pass forward flow to be agreed by the Lead

Local Flood Authority. United Utilities request that any agreed rate does not exceed 5l/s. This is based of the peak greenfield flow rate, utilising the most impermeable soil type via the HR Wallingford Greenfield estimation tool.

As a Water Company, we have no obligation to accept highway drainage into our public sewer network. However, should your proposals include runoff from highways, we would request that consideration is given to SuDS components that deliver source control are incorporated within the design of the scheme to reduce the volume and frequency of discharges of these flows to the public sewer.

Levels

For low-lying sites, (where the ground level of the site or the level of a basement is below the ground level at the point where the drainage connects to the public sewer), care should be taken to ensure that the property is not at increased risk of flooding. If these circumstances exist, we recommend that you contact us to discuss further. It could affect the detailed design of your site and result in the need to incorporate appropriate mitigating measures in your drainage scheme.

Land drainage / Overland flows / track drainage

United Utilities have no obligation, and furthermore we do not accept land drainage, overland flows or track drainage into the pubic sewerage network under any circumstances

Existing Wastewater Assets Crossing the Site

According to our public sewer records there are public sewers located within your site boundary. We will require unrestricted access to the sewer for maintenance purposes, we would ask that you maintain a minimum clearance of 6m which is measured 3m from the centre line of the pipe unless there happens to be a formal easement agreement in place, in which case the specified easement width would apply. If you cannot achieve this then you may wish to consider diverting and or abandoning the public sewer.

Please be aware that any proposed diversion may require modelling. This process may take up to 6 months in order to reach an acceptable design.

Please refer to the link below to obtain full details of the processes involved with sewer diversions:

https://www.unitedutilities.com/builders-developers/larger-developments/wastewater/sewer-diversions/

Existing Water Assets Crossing the Site

It is the developer responsibility to identify utilities on-site. Where clean water assets are shown on our records, we recommend that you contact our Water Pre-Development Team, via the following email address: DeveloperServicesWater@uuplc.co.uk. Further information for this service can be found on our website via the link below:

https://www.unitedutilities.com/builders-developers/larger-developments/pre-development/water-pre-dev/

Connection Application

Although we may discuss and agree discharge points and rates in principle, please be aware that you will have to apply for a formal sewer connection. This is so that we can assess the method of construction, Health & Safety requirements and to ultimately inspect the connection when it is made. Details of the application process and the form itself can be obtained from our website by following the link below:

https://www.unitedutilities.com/builders-developers/wastewater-services/sewer-connections/sewer-connection/

We recommend that the detailed design should confirm the locations of all utilities in the area and ensure that any proposed drainage solution considers routing and clash checks where required.

If we can be of any further assistance please don't hesitate to contact us further.

Sewer Adoptions

You have indicated on your application form that you intend to put the sewers forward for adoption (including any SuDS components that can come within the meaning of a sewer).

United Utilities assess adoption applications based on the current Design & Construction Guidance and local practices which have now replaced 'Sewers For Adoption 6th Edition'.

We recommend that you submit a pre design assessment to the sewer adoption mailbox (SewerAdoptions@uuplc.co.uk) stating pre design assessment in the title

Please refer to links below to obtain further guidance:

https://www.unitedutilities.com/builders-developers/larger-developments/wastewater/sewer-adoptions/

Site drainage must be designed in accordance with Building Regulations, National Planning Policy, and local flood authority guidelines, we would recommend that you speak and make suitable agreements with the relevant statutory bodies.

If you intend to put forward your wastewater assets for adoption by United Utilities, the proposed detail design will be subject to a technical appraisal by an Adoption Engineer as we need to be sure that the proposals meets the requirements set out in the Design & Construction Guidance. The proposed design should give consideration to long term operability and give United Utilities a safe and cost effective proposal for the lifetime of the assets. In these cases, we strongly recommend that no construction commences until the detailed drainage design, submitted as part of the Section 104 application, has been assessed and accepted in writing by United Utilities. Any work carried out prior to the technical assessment being approved is done entirely at the developer's own risk and could be subject to change.

SuDS

If your development proposal incorporates any SuDS component(s) which interact with a sewer network you plan on offering for adoption to United Utilities; contact should be made with our technical team at your earliest convenience, please complete the 'Section 104 pre-application form : ' and include as much relevant detail as you can. These discussions can help prevent delays later in the development process.

Section 104 Pre application form (1b)

As per the sewerage sector guidance, all SuDS should be designed in accordance with the standards within the Design & construction guidance & the CIRIA SuDS manual (C753)

Codes For Adoption

The new Codes for Adoption are outlined on the Water UK Website. The link below takes you to their webpage:

https://www.water.org.uk/technical-guidance/developers-services/codes-for-adoption/

A free copy of the new Design & Construction Guidance can be downloaded via the link below:

https://www.water.org.uk/sewerage-sector-guidance-approved-documents/

Many thanks and kind regards,

United Utilities
Water for the North West

Gary Jaundrell
Assistant Developer Engineer
Developer Services & Metering
Customer Services
T: 07388 715 589
unitedutilities.com

If you have received a great service today why not tell us?
Visit: unitedutilities.com/wow

Did you know we now have a live chat facility available to you Mon to Friday 8 -5pm. You just click on the orange live chat box on our webpage and one of our advisors will be ready to chat to you and help you with your enquiry https://www.unitedutilities.com/builders-developers/ or you can email us at WastewaterDeveloperServices@uuplc.co.uk

---------- Original Message ----------
From: wastewaterdeveloperservices@uuplc.co.uk [wastewaterdeveloperservices@uuplc.co.uk]
Sent: 17/10/2022 10:56
To: megan.williams@waterco.co.uk
Subject: 02949510 Altrincham Road, Manchester, M23 9TJ

Dear Megan

PRE DEVELOPMENT APPLICATION AT: – UU Ref 02949510

Please accept this email as receipt of your application received on 17/10/2022 for the above development. This has now been logged on our system and the job reference is 02949510 we would ask that you quote this reference in all future correspondence.

I have reviewed your application (and attachments) and can confirm this is suitable to be passed to Gary

Jaundrell for technical assessment. You will receive their response within 8 working days.

Kind regards Jill

Jill Ellis
Customer Advisor Advanced
Developer Services & Metering
Customer Services
Direct Tel: 01925 233 064
Tel: 0345 072 6067
unitedutilities.com

If you have received a great service today why not tell us?
Visit: unitedutilities.com/wow

Did you know we now have a live chat facility available to you Mon to Friday 8 -5pm. You just click on the orange live chat box on our webpage and one of our advisors will be ready to chat to you and help you with your enquiry https://www.unitedutilities.com/builders-developers/ or you can email us at WastewaterDeveloperServices@uuplc.co.uk

The information contained in this e-mail is intended only for the individual to whom it is addressed. It may contain legally privileged or confidential information or otherwise be exempt from disclosure. If you have received this Message in error or there are any problems, please notify the sender immediately and delete the message from your computer. You must not use, disclose, copy or alter this message for any unauthorised purpose. Neither United Utilities Group PLC nor any of its subsidiaries will be liable for any direct, special, indirect or consequential damages as a result of any virus being passed on, or arising from the alteration of the contents of this message by a third party.

United Utilities Group PLC, Haweswater House, Lingley Mere Business Park, Lingley Green Avenue, Great Sankey, Warrington, WA5 3LP
Registered in England and Wales. Registered No 6559020

www.unitedutilities.com
www.unitedutilities.com/subsidiaries

Appendix E Proposed Development Plans

DO NOT SCALE THIS DRAWING. IF IN DOUBT ASK

AO

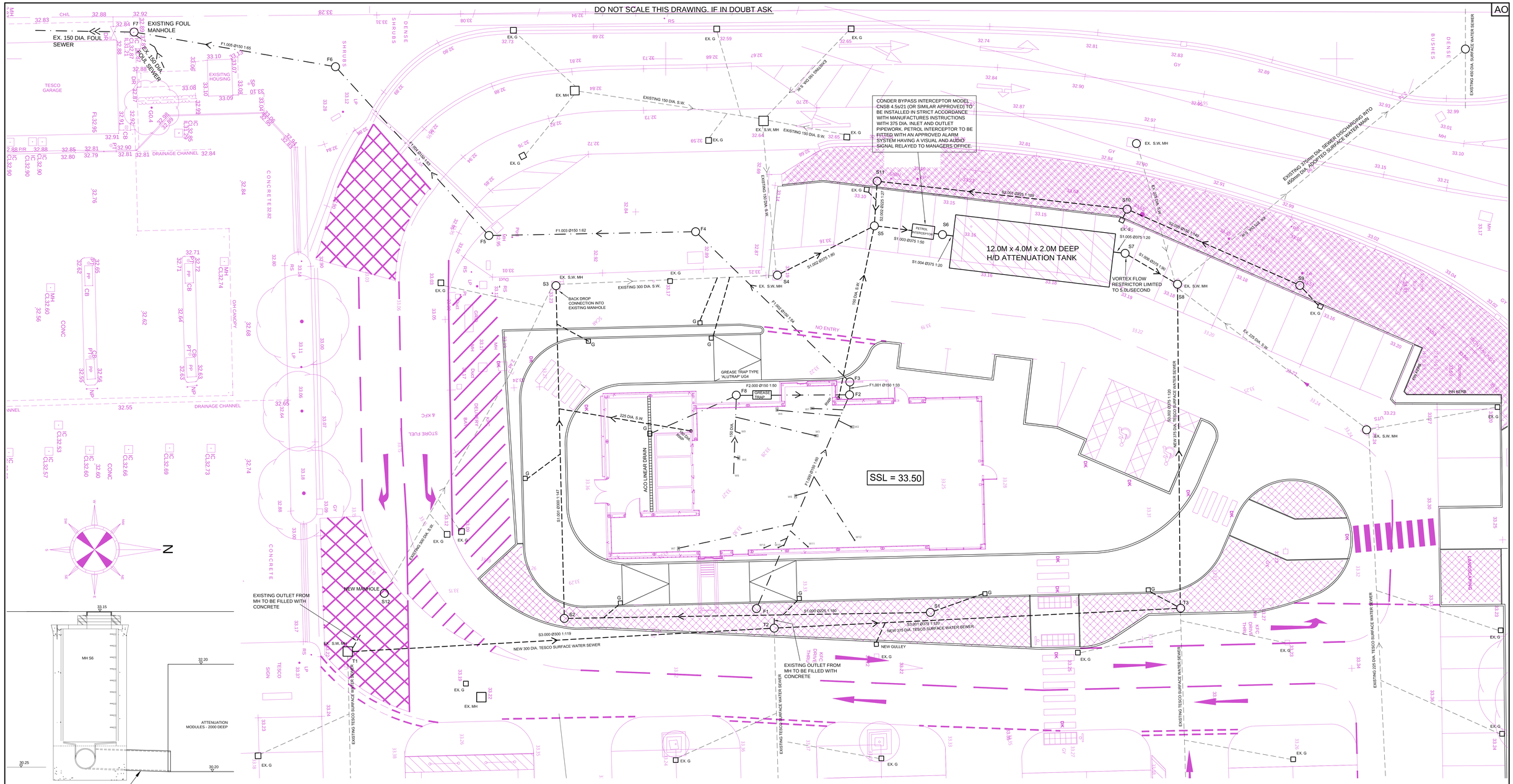

SITE LAYOUT PLAN (1:100)

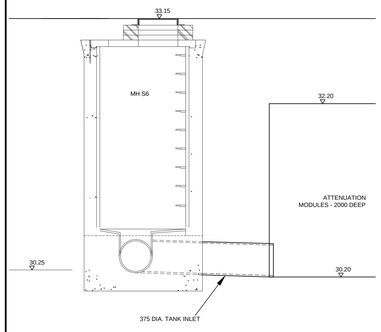

ATTENUATION TANK INLET FOR MH S6 (1:25)

NOTE: INVERT LEVELS OF EXISTING TESCO SEWERS AT T1, T2, T3 AND S8 TO BE CONFIRMED ON SITE PRIOR TO COMMENCEMENT OF DRAINAGE WORKS

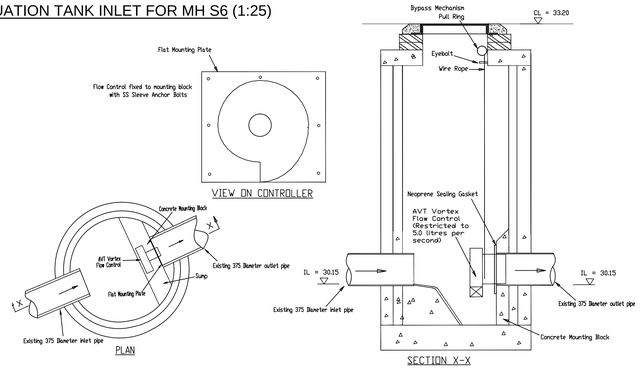

MANHOLE S7 - VORTEX FLOW CONTROL INSTALLATION DRAWING
SHOWING MOUNTING BLOCK METHOD OF INSTALLATION

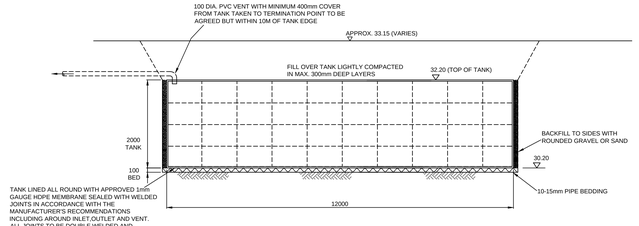

ATTENUATION TANK CROSS-SECTION (1:50)

FOUL WATER DRAINAGE

Pipe Code	Pipe Type	Diameter (mm)	Gradient (1:)	Pipe Length	Upstream Manhole Number	Upstream Manhole Invert	Upstream Manhole Cover	Downstream Manhole Number	Downstream Manhole Invert	Downstream Manhole Cover
F1.000	CLAY	150	60	17.5	F1	32.65	33.45	F2	32.33	3345
F1.001	CLAY	150	33	1.0	F2	32.33	33.45	F3	32.30	33.40
F1.002	CLAY	150	54	16.0	F3	32.30	33.40	F4	32.00	32.85
F1.003	CLAY	150	62	15.5	F4	32.00	32.85	F5	31.75	32.95
F1.004	CLAY	150	63	17.0	F5	31.75	32.95	F6	31.48	33.12
F1.005	CLAY	150	65	15.0	F6	31.48	33.12	F7	31.25	32.87
F2.000	CLAY	150	50	8.5	F8	32.50	33.40	F2	32.33	33.45

NOTE: ALL SEWERS IN TRAFFICED AREAS TO HAVE 150 CONCRETE SURROUND WHERE COVER IS LESS THAN 0.9 METRES

SURFACE WATER DRAINAGE

Pipe Code	Pipe Type	Diameter (mm)	Gradient (1:)	Pipe Length	Upstream Manhole Number	Upstream Manhole Invert	Upstream Manhole Cover	Downstream Manhole Number	Downstream Manhole Invert	Downstream Manhole Cover
S1.000	CLAY	225	180	27.0	S1	32.00	33.30	S2	31.85	33.30
S1.001	CLAY	300	147	25.0	S2	31.77	33.30	EX. MH S3 ✱	31.60 (BACK DROP CONNECTION INTO EXISTING MANHOLE)	33.20
		EX. 300 DIA.	87	16.5	EX. MH S3✱	30.66	33.20	EX. MH S4 ✱	30.53	33.20
S1.002	CLAY	375	80	8.0	EX. MH S4✱	30.45	33.20	S5	30.35	33.15
S1.003	CLAY	375	50	5.0	S5	30.35	33.15	S6	30.25	33.20
S1.004	CLAY	375	20	1.0	S6	30.25	33.20	ATTENUATION TANK	30.20	33.15 (VARIES)
S1.005	CLAY	375	20	1.0	ATTENUATION TANK	30.20	33.15 (VARIES)	S7	30.15	33.20
S1.006	CLAY	375	90	4.5	S7	30.15	33.20	EX. MH S8 ✱	30.10	33.20
S2.000	CLAY	150	140	14.0	S9	32.00	33.25	S10	31.90	33.25
S2.001	CLAY	225	109	18.5	S10	31.82	33.25	S11	31.65	33.20
S2.002	CLAY	225	27	4.0	S11	31.65	33.20	S5	31.50	33.15
S3.000	CLAY	300	119	32.0	EX. MH T1✱	30.90	33.21	T2 ✱	30.63	33.25
S3.001	CLAY	375	120	30.0	T2 ✱	30.55	33.35	T3 ✱	30.30	33.40
S3.002	CLAY	375	120	24.0	T3 ✱	30.30	33.40	EX. MH S8 ✱	30.10	33.20

NOTE: ALL SEWERS IN TRAFFICED AREAS TO HAVE 150 CONCRETE SURROUND WHERE COVER IS LESS THAN 0.9 METRES
✱ INVERT LEVELS OF EXISTING MH's T1, S3, S4, S8 & NEW MH's T2, T3, S5, S6 & S7 T.B.C.

Rev.	Description	By	Date
F	SIZE & LOCATION OF ATTENUATION TANK REVISED, MANHOLE LOCATIONS REVISED TO SUIT.	NC	APR 24
E	SIZE OF ATTENUATION TANK REVISED, FLOW RESTICTOR CHANGED TO 5.0 L/SECOND. LOCATIONS OF MANHOLES S6 & S7 REVISED. NEW 375 DIA. S.W. PIPE FROM EX. MH S4 TO EX. MH S8	NC	NOV 22
D	LOCATION OF EXISTING MANHOLE F7 REVISED, FOUL DRAINAGE INVERT LEVELS REVISED TO SUIT.	NC	FEB 22
C	MH F1 MOVED TO AVOID CANOPY FOUNDATION	NC	FEB 22
B	POP-UP LOCATIONS REVISED TO ARCHITECTS DETAILS	NC	FEB 22
A	LEVELS REMOVED & DRAINAGE SCHEDULE & DETAILS ADDED	NC	FEB 22

Client
CHICKEN CABINS LTD.

Site address
KFC DRIVE THROUGH
SECTION OF TESCO CAR PARK
ALTRINCHAM ROAD, BAGULEY.
MANCHESTER, M23 9TJ.

Title
DRAINAGE DETAILS
(SHEET 1 OF 2)

Stevenson Calam Associates
CONSULTING ENGINEERS
ORNHAMS HALL, BOROUGHBRIDGE, NORTH YORKSHIRE, YO51 9JH.
Telephone (01423) 530999
Facsimile (01423) 520028
Email: stevenson.calam@btconnect.com

Project Manager/ Checked	Drawn By	Scale	Date
	NC	AS SHOWN	FEB. 2022
Arch./Des. GS	Drawing Number 1747-4/1		Rev. F

NOTES	A1

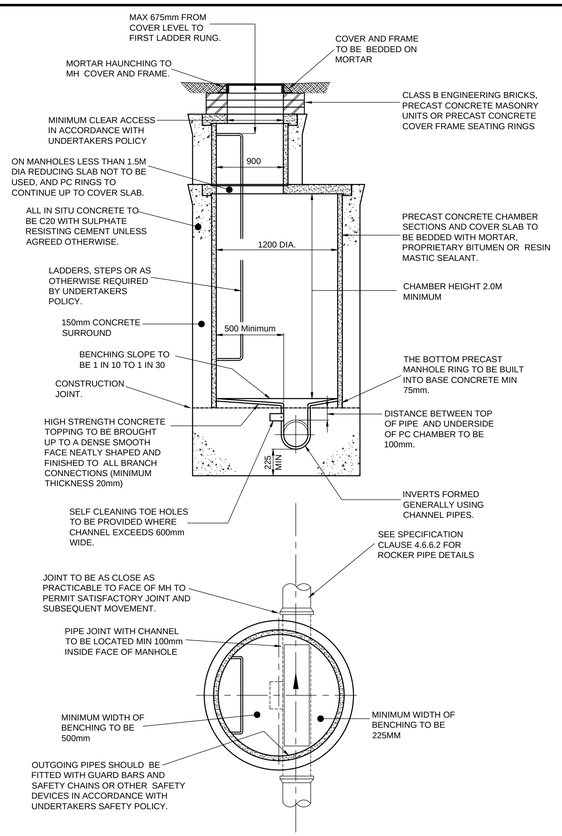

TYPICAL MANHOLE DETAIL-TYPE A

MAX DEPTH FROM GROUND LEVEL TO SOFFIT OF PIPE 3.0M TO 6.0M

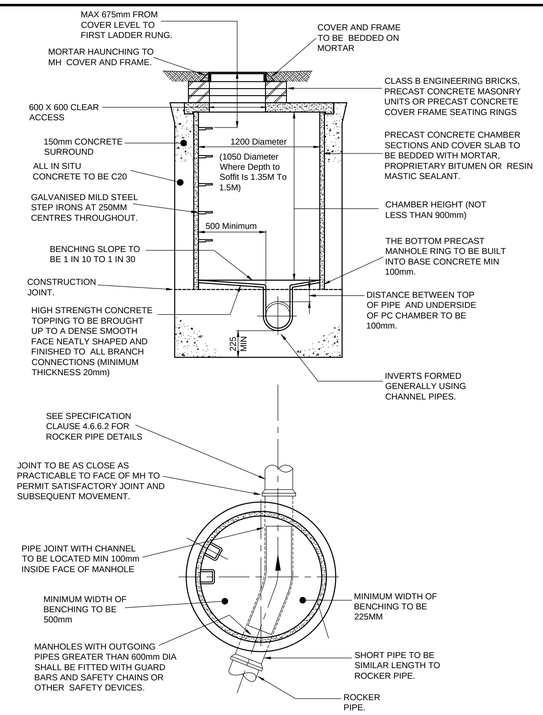

TYPICAL MANHOLE DETAIL-TYPE B

MAX DEPTH FROM GROUND LEVEL TO SOFFIT OF PIPE 3.0M

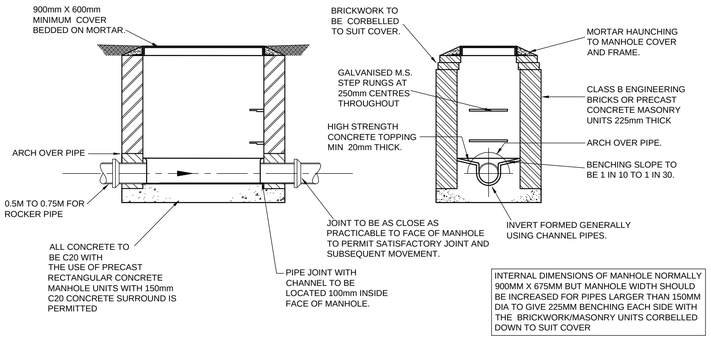

TYPICAL MANHOLE DETAIL-TYPE D.

DEPTH FROM GROUND LEVEL TO SOFFIT OF PIPE LESS THAN 1.00M.

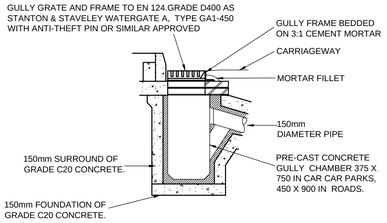

GULLY DETAIL

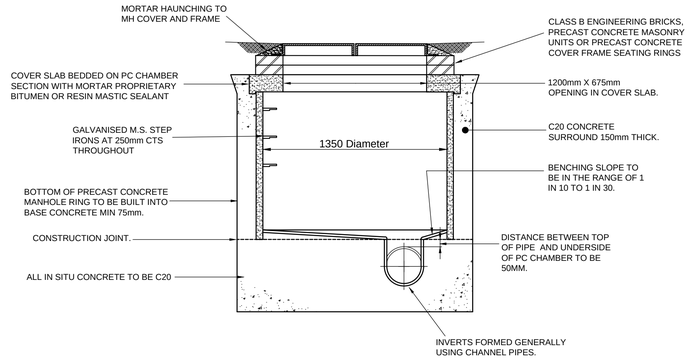

TYPICAL MANHOLE DETAIL-TYPE E

DEPTH FROM GROUND LEVEL TO SOFFIT OF PIPE 1.0M TO 1.45M.

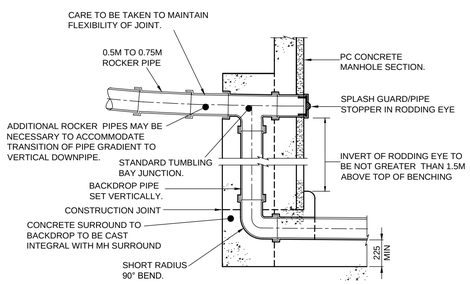

TYPICAL VERTICAL BACKDROP DETAIL

NOTE: STEEPER GRADIENTS ARE PREFERRED TO THE USE OF BACKDROPS. WHERE THE DROP IS NOT EXCESSIVE A 45 DEGREE DROP PIPE MAY BE USED.

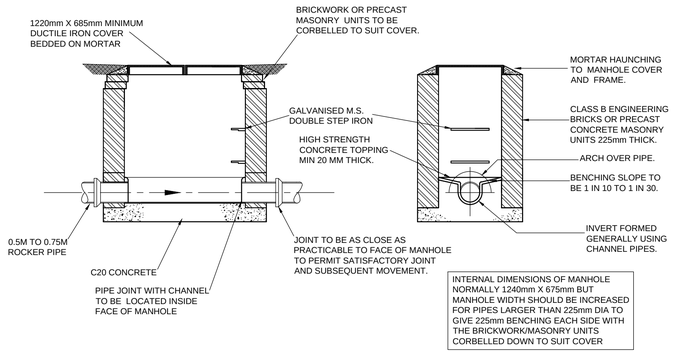

TYPICAL MANHOLE DETAIL-TYPE C.

DEPTH FROM GROUND LEVEL TO SOFFIT OF PIPE 1.0M TO 1.45M.

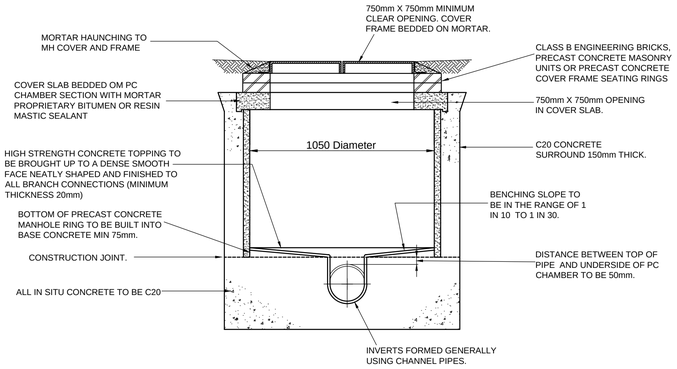

TYPICAL MANHOLE DETAIL-TYPE F

DEPTH FROM GROUND LEVEL TO SOFFIT LESS THAN 1.0M.

SELECTION OF THIS TYPE OF MANHOLE RESTRICTED TO LOCATIONS WHERE GRADE B COVERS ARE TO BE USED

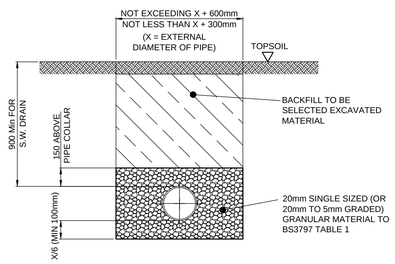

GRANULAR BED DETAIL 1.

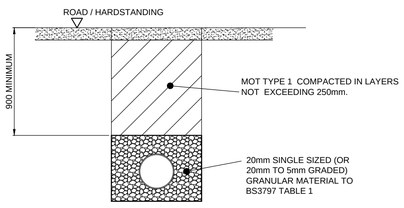

CLASS S - BED DETAIL 2.

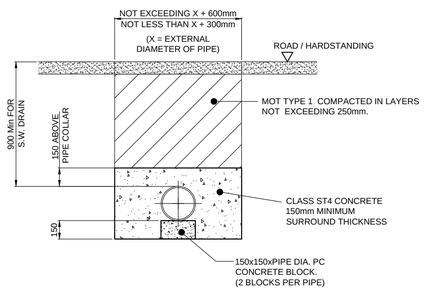

CONCRETE BED DETAIL 3.

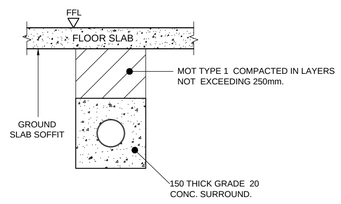

PIPES UNDER BUILDINGS 4.

PIPE BEDDING DETAILS

PIPE BEDDING DETAILS

1. UNDER SOFT LANDSCAPING PROVIDE GRANULAR BED DETAIL.
2. UNDER ROADS AND HARDSTANDINGS WHERE PIPE HAS OVER 0.9 M COVER PROVIDE CLASS S BEDDING.
3. UNDER ROADS AND HARDSTANDINGS WHERE PIPE HAS LESS THAN 0.9 M COVER PROVIDE CONCRETE BED DETAIL.
4. WHERE PIPES PASS UNDER BUILDINGS THEY SHALL BE SURROUNDED IN CONCRETE AND HAVE MoT TYPE 1 BACKFILL.

THIS DRAWING TO BE READ IN CONJUNCTION WITH SCA DRAWING 1747-4/1

Rev.	Description	By	Date

Client
CHICKEN CABINS LTD.

Site address
KFC DRIVE THROUGH
SECTION OF TESCO CAR PARK
ALTRINCHAM ROAD, BAGULEY.
MANCHESTER, M23 9TJ.

Title
DRAINAGE DETAILS
(SHEET 2 OF 2)

Stevenson Calam Associates
CONSULTING ENGINEERS
ORNHAMS HALL, BOROUGHBRIDGE,
NORTH YORKSHIRE. YO51 9JH.
Telephone (01423) 530999
Facsimile (01423) 520028
Email: stevenson.calam@btconnect.com
SCA

Project Manager/ Checked	Drawn By	Scale	Date
	NC	AS SHOWN	FEB. 2022
Arch./Des. GS	Drawing Number 1747-4/2		Rev.

DO NOT SCALE THIS DRAWING. IF IN DOUBT ASK

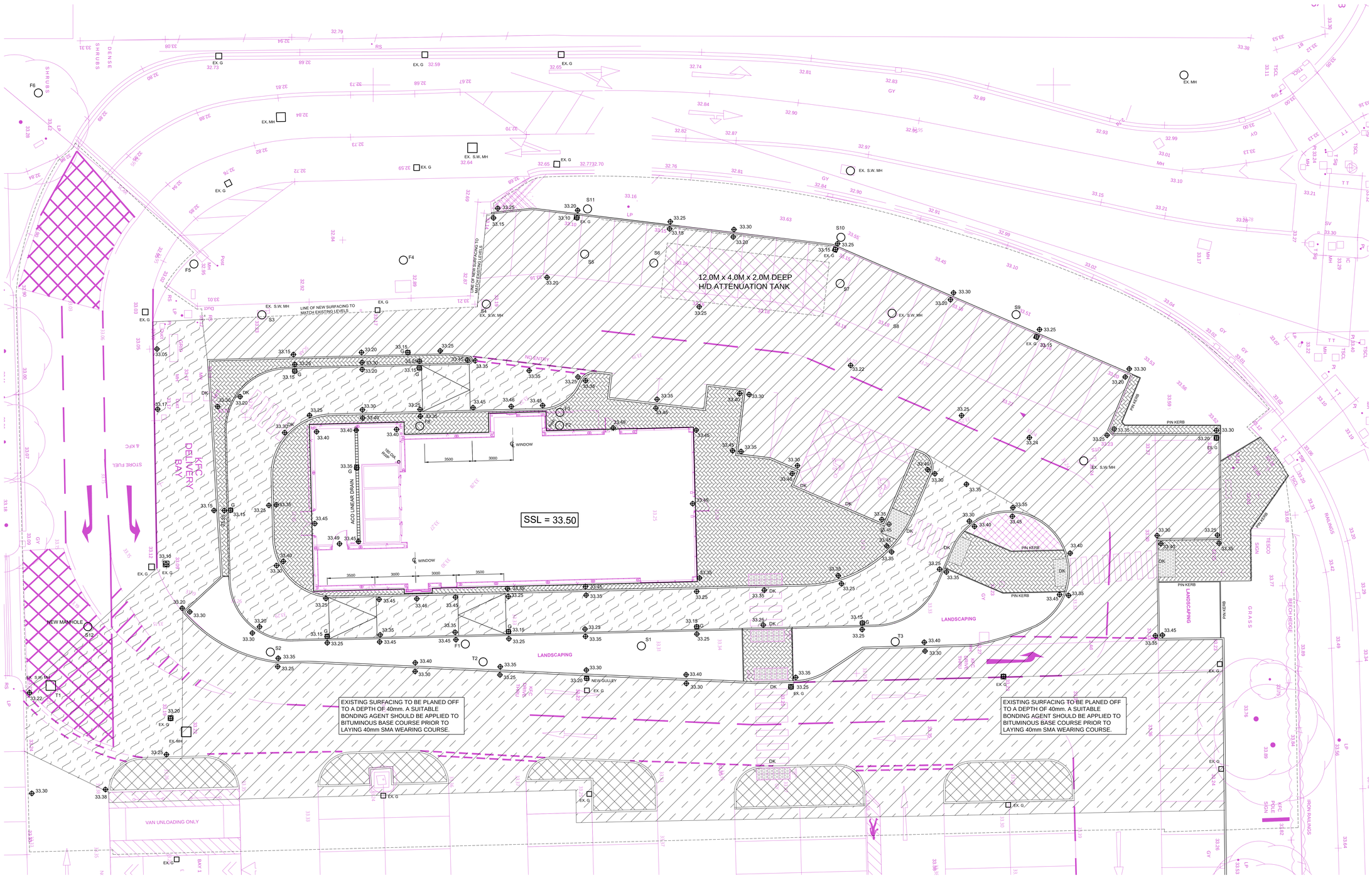

SITE LAYOUT PLAN (1:100)

NOTES

AO

LEGEND

- 33.25 — DENOTES PROPOSED LEVEL
- 32.95 — DENOTES EXISTING LEVEL
- D/K — DENOTES DROP KERB WITH TACTILE PAVING
- G — ROAD GULLY
- DENOTES BITUMINOUS FINISH LIGHT DUTY
- DENOTES BITUMINOUS FINISH HEAVY DUTY
- DENOTES PAVED AREA
- DENOTES BITUMINOUS FINISH TO PEDESTRIAN AREAS
- DENOTES EXISTING SURFACING TO BE PLANED OFF TO A DEPTH OF 40mm. A SUITABLE BONDING AGENT SHOULD BE APPLIED TO BITUMINOUS BASE COURSE PRIOR TO LAYING 40mm SMA WEARING COURSE.

Rev.	Description	By	Date
D	SIZE & LOCATION OF ATTENUATION TANK REVISED LOCATION OF MANHOLES MOVED TO SUIT.	NC	APR 24
C	SIZE OF ATTENUATION TANK & LOCATION OF MANHOLES S6 & S7 REVISED.	NC	NOV 22
B	MH F1 MOVED TO AVOID CANOPY FOUNDATION	NC	FEB 22
A	MINOR MODIFICATIONS TO LAYOUT & FINISHES.	NC	FEB 22

Client
CHICKEN CABINS LTD.

Site address
KFC DRIVE THROUGH
SECTION OF TESCO CAR PARK
ALTRINCHAM ROAD, BAGULEY.
MANCHESTER, M23 9TJ.

Stevenson Calam Associates
CONSULTING ENGINEERS
ORNHAMS HALL, BOROUGHBRIDGE,
NORTH YORKSHIRE, YO51 9JH.
Telephone (01423) 530999
Facsimile (01423) 520028
Email: stevenson.calam@btconnect.com

Title
EXTERNAL WORKS
(SHEET 1 OF 2)

Project Manager/ Checked	Drawn By	Scale	Date
GS	NC	AS SHOWN	FEB. 2022

Drawing Number 1747-4/3 — Rev. D

DO NOT SCALE THIS DRAWING. IF IN DOUBT ASK

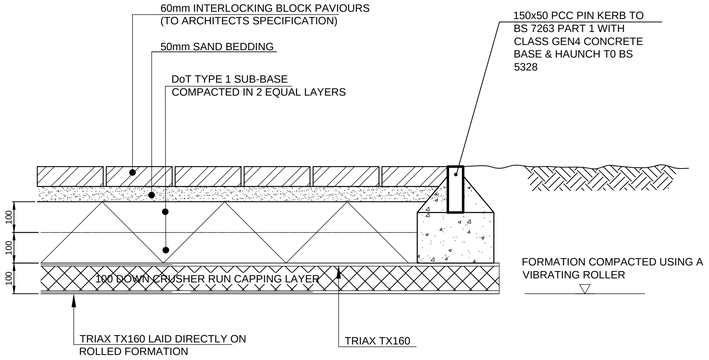

TYPICAL SECTION THROUGH PEDESTRIAN BLOCK PAVING (1:10)

SMA WEARING COURSE TO ADOPT 14mm SIZE AGGREGATE TO BS 594 : PART1 : GROUP 2 AND LAID IN ACCORDANCE WITH CLAUSES 702, 703, 901, 911 AND 915 OF DtP SPECIFICATION FOR HIGHWAY WORKS 1986.

BITUMINOUS BASE COURSE TO BE 60mm THICK - 20mm AGGREGATE TO SECTION 6.5 OF BS 4987 PART 1 AND LAID IN ACCORDANCE WITH BS 4987 PART 2 AND CLAUSES 702, 703, 901 AND 906 OF DtP SPECIFICATION FOR HIGHWAY WORKS 1986.
BINDER TO BE 150 PEN BITUMEN

ROAD-BASE TO BE GRANULAR MATERIAL, TYPE 1 AS PER DtP SPECIFICATION CLAUSE 803 LAID IN ACCORDANCE WITH DtP CLAUSE 802 - REFER TO DETAILS FOR SPECIFIC DEPTHS.

TENSAR SS30 GEOGRID TO HAVE MINIMUM 300mm LAPS AND MUST BE LAID IN ACCORDANCE WITH MANUFACTURERS DETAILS AND RECOMMENDATIONS.

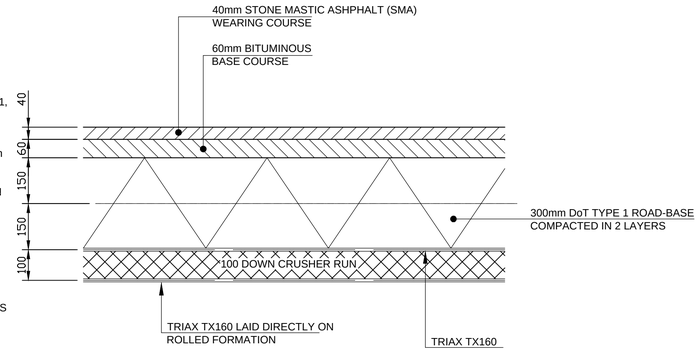

TYPICAL SECTION THROUGH LIGHT DUTY CAR PARK AREAS (1:10)

WEARING COURSE TO BE 14mm SIZE SMA AND LAID IN ACCORDANCE WITH BS 4987 PART 2 AND CLAUSES 702, 703, 901 AND 912 OF DtP SPECIFICATION FOR HIGHWAY WORKS.
BINDER TO BE 200 PEN BITUMEN

BASE COURSE TO BE 60mm THICK - 20mm AGGREGATE DENSE BITUMEN MACADAM TO SECTION 6.5 OF BS 4987 PART 1 AND LAID IN ACCORDANCE WITH BS 4987 PART 2 AND CLAUSES 702, 703, 901 AND 906 OF DtP SPECIFICATION FOR HIGHWAY WORKS.
BINDER TO BE 150 PEN BITUMEN

ROAD BASE TO BE 100mm THICK - 20mm AGGREGATE DENSE BITUMEN MACADAM AS BASE COURSE.

SUB-BASE TO BE GRANULAR MATERIAL, TYPE 1 AS PER DtP SPECIFICATION CLAUSE 803 LAID IN ACCORDANCE WITH DtP CLAUSE 802 - REFER TO DETAILS FOR SPECIFIC DEPTHS.

TRIAX TX160 TO HAVE MINIMUM 300mm LAPS AND MUST BE LAID IN ACCORDANCE WITH MANUFACTURERS DETAILS AND RECOMMENDATIONS.

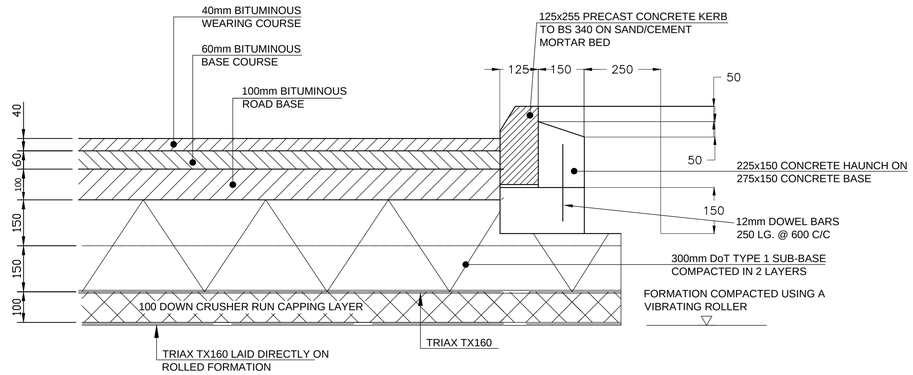

TYPICAL SECTION THROUGH HEAVY DUTY VEHICLE ROUTE (1:10)

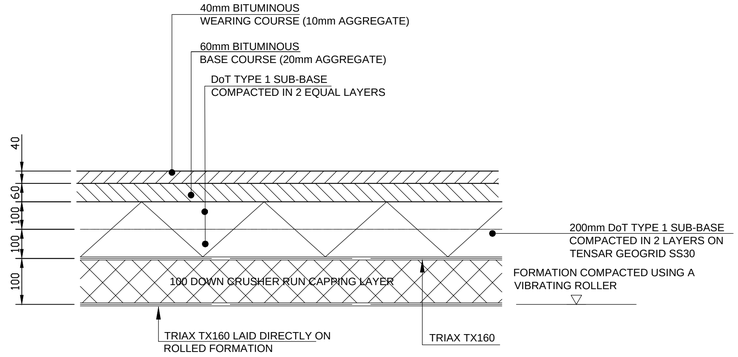

TYPICAL SECTION THROUGH PEDESTRIAN BITUMINOUS PAVING (1:10)

THIS DRAWING IS TO BE READ IN CONJUNCTION WITH DRG. No. 1747-4/3

NOTES | A1

Rev.	Description	By	Date

Client: CHICKEN CABINS LTD.

Site address: KFC DRIVE THROUGH SECTION OF TESCO CAR PARK ALTRINCHAM ROAD, BAGULEY. MANCHESTER, M23 9TJ.

Stevenson Calam Associates
CONSULTING ENGINEERS
ORNHAMS HALL, BOROUGHBRIDGE, NORTH YORKSHIRE. YO51 9JH.
Telephone (01423) 530999
Facsimile (01423) 520028
Email: stevenson.calam@btconnect.com

Title: EXTERNAL WORKS (SHEET 2 OF 2)

Project Manager/ Checked	Drawn By	Scale	Date
GS	NC	AS SHOWN	FEB. 2022

Drawing Number: 1747-4/4 | Rev.

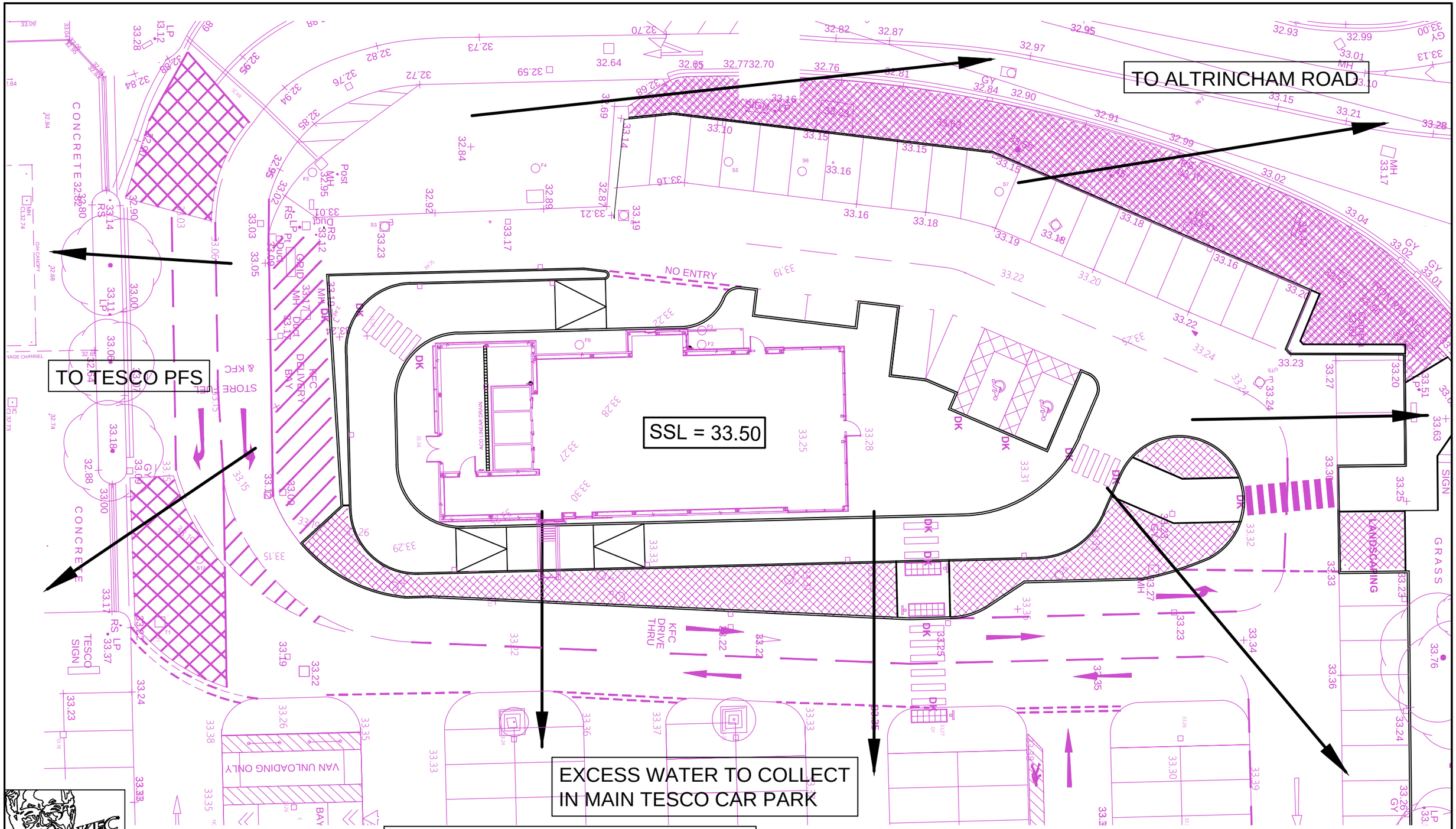

KEY

DENOTES DIRECTION OF FLOW OF EXCESS SURFACE WATER

SITE LAYOUT PLAN (1:250)

Title	FLOOD EXCEEDANCE FLOW ROUTES	Rev	Description	By	App	Date	
Client	CHICKEN CABINS LTD.						
Site address	KFC DRIVE THROUGH SECTION OF TESCO CAR PARK ALTRINCHAM ROAD, BAGULEY. MANCHESTER, M23 9TJ.						

Stevenson Calam Associates
CONSULTING ENGINEERS

ORNHAMS HALL, BOROUGHBRIDGE, NORTH YORKSHIRE. YO51 9JH.
Telephone (01423) 530999
Facsimile (01423) 520028
Email: stevenson.calam@btconnect.com

SCA

Scale AS SHOWN	A3	Drawn NC	
Date JUNE 2024		Checked GS	
Drawing No. 1747-4/20		Revision	

Appendix F LLFA Correspondence

Megan Williams

From: Flood Risk Management <floodriskmanagement@manchester.gov.uk>
Sent: 01 November 2022 10:54
To: Megan Williams
Subject: RE: 14948 - LLFA email
Attachments: Manchester City Council - SuDS Requirement for Developers 2019.pdf; Altrincham Road, Manchester, M23 9TJ [1].pdf

Hi Megan,

I hope you're well. Thank you for your email. We have reviewed your site at Altrincham Road, Manchester, M23 9TJ. Please find our comments below in red.

MCC offer a Data Screening Service. Please find attached letter detailing our Service. If you would like to instruct a data screening, please submit a request at the following link:
https://manchester.civicapayforms.co.uk/Sales/LaunchInternet.aspx?saleform=llfa

Please also find attached our SuDS Guidance for Developers which we recommend is reviewed to guide your drainage strategy. We promote the use of Sustainable Drainage infrastructure and would welcome early discussion with regards to the drainage layout. Please note surface water from the development must not drain onto the highway or any third-party land.

Should you have further queries about your proposal, please do not hesitate to contact us.

Thank you.

Kind regards
Talha Esmail
Flood Risk Engineer – Lead Local Flood Authority
E: talha.esmail@manchester.gov.uk MANCHESTER CITY COUNCIL
From: Megan Williams megan.williams@waterco.co.uk
Sent: 17 October 2022 13:23
To: Flood Risk Management floodriskmanagement@manchester.gov.uk
Subject: 14948 - LLFA email

> You don't often get email from megan.williams@waterco.co.uk. Learn why this is important

Proposed commercial development at Altrincham Road, Manchester, M23 9TJ. NGR: 380224, 389297

Dear Sir/Madam,

We are currently preparing a Drainage Strategy for a proposed commercial development located at the above address. We are seeking Lead Local Flood Authority comments on surface water drainage.

The proposed development is for the erection of a single storey building to form mixed restaurant and hot food takeaway use (sui generis), incorporating a 'drive-thru' facility, car and cycle parking, the creation of a new pedestrian and cycle footpath link into the site from Altrincham Road and associated landscaping within part of existing supermarket car park. A development plan is attached for your reference.

A site investigation has been undertaken by Crossfield Consulting in March 2021. They have provided us with the below summary of their findings:

'Due to the presence of relatively deep Made Ground and shallow groundwater, it is considered that soakaway drainage is unlikely to eb feasible and an alternative drainage solution should be identified'.
The LLFA note and accept.

There are no watercourses in the immediate vicinity of the site.
The LLFA note and accept.

We propose to discharge surface water to the existing 375mm surface water sewer on site at a controlled rate, which discharges to the 450mm public surface water sewer north-west of the site.
We have no objection in principle.

We propose to discharge foul flows to the public sewerage network, specifically the 525mm combined sewer located south of the site via an existing connection.
The LLFA only comment on Surface Water related queries.

Please could you advise if this would be acceptable and if you have any discharge rate requirements.
Proposed surface water drainage will need to be restricted to greenfield rates or by at least 50% from the existing rates where appropriate.

Furthermore, please could you advise on the required climate change allowance to be applied to attenuation storage (i.e 20%/30%/40%) and if you have any further surface water drainage requirements.
What is the design life of this development?
Please note there are new updates for peak rainfall climate change allowances in Flood risk assessments. For further details on climate change allowances please visit - Flood risk assessments: climate change allowances - GOV.UK (www.gov.uk)
Type in your postcode to determine the %cc - Climate change allowances for peak river flow in England (data.gov.uk)

If you require any further information to process my request, please don't hesitate to contact me.

Kind Regards,

Megan Williams BSc (Hons)
Environmental Consultant

DDI: 01244 668122
Office: 01824 702220
Teams: megan.williams@waterco.co.uk
We're recruiting! For more information, please take a look at our website.

Waterco
Assessment, Modelling, Design

For email confidentiality, limitations and company details please see our disclaimer webpage. Registered in Wales under company no. 3577754. Waterco Ltd, Eden Court, Ruthin LL15 1NJ. Please click for our GDPR policy.

Please consider the environment before printing this email.

****
This email and any files transmitted with it are confidential and intended solely for the use of the individual or entity to whom they are addressed.
If you have received this email in error, please notify the system manager.
The full text of the Council's email disclaimer is available at: www.manchester.gov.uk/emaildisclaimer.
Your personal data is very important to us. Please refer to our privacy notice at: www.manchester.gov.uk/privacy for further information.

This footnote also confirms that this email message has been swept for the presence of computer viruses.
****

Appendix G MicroDrainage Simulations

STORM SEWER DESIGN by the Modified Rational Method

Network Design Table for Storm

PN	Length (m)	Fall (m)	Slope (1:X)	I.Area (ha)	T.E. (mins)	Base Flow (l/s)	k (mm)	HYD SECT	DIA (mm)	Section Type	Auto Design
S1.000	27.280	0.152	180.0	0.011	5.00	0.0	0.600	o	225	Pipe/Conduit	
S1.001	24.812	0.169	147.0	0.031	0.00	0.0	0.600	o	300	Pipe/Conduit	
S1.002	16.516	0.190	87.0	0.065	0.00	0.0	0.600	o	300	Pipe/Conduit	
S2.000	14.070	0.101	140.0	0.022	5.00	0.0	0.600	o	150	Pipe/Conduit	
S2.001	24.379	0.169	144.0	0.061	0.00	0.0	0.600	o	225	Pipe/Conduit	
S2.002	7.847	0.049	160.0	0.000	0.00	0.0	0.600	o	225	Pipe/Conduit	

Network Results Table

PN	Rain (mm/hr)	T.C. (mins)	US/IL (m)	Σ I.Area (ha)	Σ Base Flow (l/s)	Foul (l/s)	Add Flow (l/s)	Vel (m/s)	Cap (l/s)	Flow (l/s)
S1.000	50.00	5.47	32.000	0.011	0.0	0.0	0.0	0.97	38.6	1.5
S1.001	50.00	5.79	31.770	0.042	0.0	0.0	0.0	1.29	91.5	5.7
S1.002	50.00	5.95	30.660	0.107	0.0	0.0	0.0	1.69	119.2	14.5
S2.000	50.00	5.28	32.000	0.022	0.0	0.0	0.0	0.85	15.0	2.9
S2.001	50.00	5.65	31.820	0.083	0.0	0.0	0.0	1.09	43.2	11.2
S2.002	50.00	5.78	31.650	0.083	0.0	0.0	0.0	1.03	41.0	11.2

©1982-2020 Innovyze

STORM SEWER DESIGN by the Modified Rational Method

Network Design Table for Storm

PN	Length (m)	Fall (m)	Slope (1:X)	I.Area (ha)	T.E. (mins)	Base Flow (l/s)	k (mm)	HYD SECT	DIA (mm)	Section Type	Auto Design
S1.003	3.161	0.045	70.0	0.000	0.00	0.0	0.600	o	375	Pipe/Conduit	
S1.004	3.972	0.050	80.0	0.017	0.00	0.0	0.600	o	375	Pipe/Conduit	
S1.005	19.124	0.200	95.6	0.000	0.00	0.0	0.600	o	375	Pipe/Conduit	
S1.006	3.573	0.051	70.0	0.000	0.00	0.0	0.600	o	375	Pipe/Conduit	

Network Results Table

PN	Rain (mm/hr)	T.C. (mins)	US/IL (m)	Σ I.Area (ha)	Σ Base Flow (l/s)	Foul (l/s)	Add Flow (l/s)	Vel (m/s)	Cap (l/s)	Flow (l/s)
S1.003	50.00	5.98	30.450	0.190	0.0	0.0	0.0	2.17	239.5	25.7
S1.004	50.00	6.01	30.400	0.207	0.0	0.0	0.0	2.03	223.9	28.0
S1.005	50.00	6.18	30.350	0.207	0.0	0.0	0.0	1.85	204.7	28.0
S1.006	50.00	6.21	30.150	0.207	0.0	0.0	0.0	2.17	239.5	28.0

©1982-2020 Innovyze

Manhole Schedules for Storm

MH Name	MH CL (m)	MH Depth (m)	MH Connection	MH Diam.,L*W (mm)	Pipe Out PN	Pipe Out Invert Level (m)	Pipe Out Diameter (mm)	Pipes In PN	Pipes In Invert Level (m)	Pipes In Diameter (mm)	Backdrop (mm)
S1	33.300	1.300	Open Manhole	1050	S1.000	32.000	225				
S2	33.300	1.530	Open Manhole	1050	S1.001	31.770	300	S1.000	31.848	225	3
S3	33.200	2.540	Open Manhole	1200	S1.002	30.660	300	S1.001	31.601	300	941
S9	33.250	1.250	Open Manhole	1050	S2.000	32.000	150				
S10	33.250	1.430	Open Manhole	1050	S2.001	31.820	225	S2.000	31.900	150	5
S11	32.700	1.050	Open Manhole	1050	S2.002	31.650	225	S2.001	31.651	225	1
S4	33.200	2.750	Open Manhole	1500	S1.003	30.450	375	S1.002	30.470	300	
								S2.002	31.601	225	1001
S5	33.200	2.800	Open Manhole	1500	S1.004	30.400	375	S1.003	30.405	375	5
S6	33.150	2.800	Open Manhole	1500	S1.005	30.350	375	S1.004	30.350	375	
S7	33.200	3.050	Open Manhole	1500	S1.006	30.150	375	S1.005	30.150	375	
S8	33.200	3.101	Open Manhole	0		OUTFALL		S1.006	30.099	375	

©1982-2020 Innovyze

Manhole Schedules for Storm

MH Name	Manhole Easting (m)	Manhole Northing (m)	Intersection Easting (m)	Intersection Northing (m)	Manhole Access	Layout (North)
S1	66.018	34.389	66.018	34.389	Required	
S2	38.742	33.940	38.742	33.940	Required	
S3	38.119	58.744	38.119	58.744	Required	
S9	93.553	58.761	93.553	58.761	Required	
S10	80.683	64.446	80.683	64.446	Required	
S11	56.455	67.156	56.455	67.156	Required	
S4	54.617	59.527	54.617	59.527	Required	

©1982-2020 Innovyze

Manhole Schedules for Storm

MH Name	Manhole Easting (m)	Manhole Northing (m)	Intersection Easting (m)	Intersection Northing (m)	Manhole Access	Layout (North)
S5	57.775	59.400	57.775	59.400	Required	
S6	61.746	59.298	61.746	59.298	Required	
S7	80.865	58.833	80.865	58.833	Required	
S8	84.438	58.854			No Entry	

©1982-2020 Innovyze

PIPELINE SCHEDULES for Storm

Upstream Manhole

PN	Hyd Sect	Diam (mm)	MH Name	C.Level (m)	I.Level (m)	D.Depth (m)	MH Connection	MH DIAM., L*W (mm)
S1.000	o	225	S1	33.300	32.000	1.075	Open Manhole	1050
S1.001	o	300	S2	33.300	31.770	1.230	Open Manhole	1050
S1.002	o	300	S3	33.200	30.660	2.240	Open Manhole	1200
S2.000	o	150	S9	33.250	32.000	1.100	Open Manhole	1050
S2.001	o	225	S10	33.250	31.820	1.205	Open Manhole	1050
S2.002	o	225	S11	32.700	31.650	0.825	Open Manhole	1050

Downstream Manhole

PN	Length (m)	Slope (1:X)	MH Name	C.Level (m)	I.Level (m)	D.Depth (m)	MH Connection	MH DIAM., L*W (mm)
S1.000	27.280	180.0	S2	33.300	31.848	1.227	Open Manhole	1050
S1.001	24.812	147.0	S3	33.200	31.601	1.299	Open Manhole	1200
S1.002	16.516	87.0	S4	33.200	30.470	2.430	Open Manhole	1500
S2.000	14.070	140.0	S10	33.250	31.900	1.201	Open Manhole	1050
S2.001	24.379	144.0	S11	32.700	31.651	0.824	Open Manhole	1050
S2.002	7.847	160.0	S4	33.200	31.601	1.374	Open Manhole	1500

©1982-2020 Innovyze

PIPELINE SCHEDULES for Storm

Upstream Manhole

PN	Hyd Sect	Diam (mm)	MH Name	C.Level (m)	I.Level (m)	D.Depth (m)	MH Connection	MH DIAM., L*W (mm)
S1.003	o	375	S4	33.200	30.450	2.375	Open Manhole	1500
S1.004	o	375	S5	33.200	30.400	2.425	Open Manhole	1500
S1.005	o	375	S6	33.150	30.350	2.425	Open Manhole	1500
S1.006	o	375	S7	33.200	30.150	2.675	Open Manhole	1500

Downstream Manhole

PN	Length (m)	Slope (1:X)	MH Name	C.Level (m)	I.Level (m)	D.Depth (m)	MH Connection	MH DIAM., L*W (mm)
S1.003	3.161	70.0	S5	33.200	30.405	2.420	Open Manhole	1500
S1.004	3.972	80.0	S6	33.150	30.350	2.425	Open Manhole	1500
S1.005	19.124	95.6	S7	33.200	30.150	2.675	Open Manhole	1500
S1.006	3.573	70.0	S8	33.200	30.099	2.726	Open Manhole	0

©1982-2020 Innovyze

Area Summary for Storm

Pipe Number	PIMP Type	PIMP Name	PIMP (%)	Gross Area (ha)	Imp. Area (ha)	Pipe Total (ha)
1.000	User	-	100	0.011	0.011	0.011
1.001	User	-	100	0.011	0.011	0.011
	User	-	100	0.020	0.020	0.031
1.002	User	-	100	0.004	0.004	0.004
	User	-	100	0.008	0.008	0.012
	User	-	100	0.053	0.053	0.065
2.000	User	-	100	0.022	0.022	0.022
2.001	User	-	100	0.061	0.061	0.061
2.002	-	-	100	0.000	0.000	0.000
1.003	-	-	100	0.000	0.000	0.000
1.004	User	-	100	0.017	0.017	0.017
1.005	-	-	100	0.000	0.000	0.000
1.006	-	-	100	0.000	0.000	0.000
				Total	Total	Total
				0.207	0.207	0.207

Free Flowing Outfall Details for Storm

Outfall Pipe Number	Outfall Name	C. Level (m)	I. Level (m)	Min I. Level (m)	D,L (mm)	W (mm)
S1.006	S8	33.200	30.099	0.000	0	0

©1982-2020 Innovyze

Simulation Criteria for Storm

Volumetric Runoff Coeff	0.750	Manhole Headloss Coeff (Global)	0.500	Inlet Coeffiecient	0.800
Areal Reduction Factor	1.000	Foul Sewage per hectare (l/s)	0.000	Flow per Person per Day (l/per/day)	0.000
Hot Start (mins)	0	Additional Flow - % of Total Flow	0.000	Run Time (mins)	60
Hot Start Level (mm)	0	MADD Factor * 10m³/ha Storage	2.000	Output Interval (mins)	1

Number of Input Hydrographs	0	Number of Offline Controls	0	Number of Time/Area Diagrams	0
Number of Online Controls	1	Number of Storage Structures	1	Number of Real Time Controls	0

Synthetic Rainfall Details

Rainfall Model	FEH	Summer Storms	Yes
Return Period (years)	5	Winter Storms	Yes
FEH Rainfall Version	2013	Cv (Summer)	0.750
Site Location	GB 380224 389297 SJ 80224 89297	Cv (Winter)	0.840
Data Type	Point	Storm Duration (mins)	30

©1982-2020 Innovyze

Online Controls for Storm

Hydro-Brake® Optimum Manhole: S7, DS/PN: S1.006, Volume (m³): 7.3

Unit Reference	MD-SHE-0092-5000-2000-5000	Sump Available	Yes
Design Head (m)	2.000	Diameter (mm)	92
Design Flow (l/s)	5.0	Invert Level (m)	30.150
Flush-Flo™	Calculated	Minimum Outlet Pipe Diameter (mm)	150
Objective	Minimise upstream storage	Suggested Manhole Diameter (mm)	1200
Application	Surface		

Control Points	Head (m)	Flow (l/s)	Control Points	Head (m)	Flow (l/s)
Design Point (Calculated)	2.000	5.0	Kick-Flo®	0.816	3.3
Flush-Flo™	0.398	4.1	Mean Flow over Head Range	-	3.9

The hydrological calculations have been based on the Head/Discharge relationship for the Hydro-Brake® Optimum as specified. Should another type of control device other than a Hydro-Brake Optimum® be utilised then these storage routing calculations will be invalidated

Depth (m)	Flow (l/s)	Depth (m)	Flow (l/s)	Depth (m)	Flow (l/s)	Depth (m)	Flow (l/s)	Depth (m)	Flow (l/s)	Depth (m)	Flow (l/s)
0.100	2.9	0.600	4.0	1.600	4.5	2.600	5.6	5.000	7.7	7.500	9.3
0.200	3.8	0.800	3.4	1.800	4.8	3.000	6.0	5.500	8.0	8.000	9.6
0.300	4.1	1.000	3.6	2.000	5.0	3.500	6.5	6.000	8.4	8.500	9.9
0.400	4.1	1.200	3.9	2.200	5.2	4.000	6.9	6.500	8.7	9.000	10.2
0.500	4.1	1.400	4.2	2.400	5.4	4.500	7.3	7.000	9.0	9.500	10.4

©1982-2020 Innovyze

Storage Structures for Storm

Tank or Pond Manhole: S7, DS/PN: S1.006

Invert Level (m) 30.200

Depth (m)	Area (m²)	Depth (m)	Area (m²)	Depth (m)	Area (m²)
0.000	48.0	2.000	48.0	2.001	0.0

©1982-2020 Innovyze

2 year Return Period Summary of Critical Results by Maximum Level (Rank 1) for Storm

Simulation Criteria

Areal Reduction Factor 1.000 Manhole Headloss Coeff (Global) 0.500 MADD Factor * 10m³/ha Storage 2.000
Hot Start (mins) 0 Foul Sewage per hectare (l/s) 0.000 Inlet Coeffiecient 0.800
Hot Start Level (mm) 0 Additional Flow - % of Total Flow 0.000 Flow per Person per Day (l/per/day) 0.000

Number of Input Hydrographs 0 Number of Offline Controls 0 Number of Time/Area Diagrams 0
Number of Online Controls 1 Number of Storage Structures 1 Number of Real Time Controls 0

Synthetic Rainfall Details

Rainfall Model FEH Data Type Point
FEH Rainfall Version 2013 Cv (Summer) 0.750
Site Location GB 380224 389297 SJ 80224 89297 Cv (Winter) 0.840

Margin for Flood Risk Warning (mm) 300.0
Analysis Timestep 2.5 Second Increment (Extended)
DTS Status OFF
DVD Status ON
Inertia Status ON

Profile(s) Summer and Winter
Duration(s) (mins) 15, 30, 60, 120, 240, 360, 480, 960, 1440
Return Period(s) (years) 2, 30, 100
Climate Change (%) 0, 0, 45

©1982-2020 Innovyze

2 year Return Period Summary of Critical Results by Maximum Level (Rank 1) for Storm

PN	US/MH Name	Storm	Return Period	Climate Change	First (X) Surcharge	First (Y) Flood	First (Z) Overflow	Overflow Act.	Water Level (m)	Surcharged Depth (m)	Flooded Volume (m³)	Flow / Cap.	Overflow (l/s)	Half Drain Time (mins)	Pipe Flow (l/s)

PN	US/MH Name	Status	Level Exceeded

©1982-2020 Innovyze

2 year Return Period Summary of Critical Results by Maximum Level (Rank 1) for Storm

PN	US/MH Name	Storm	Return Period	Climate Change	First (X) Surcharge	First (Y) Flood	First (Z) Overflow	Overflow Act.	Water Level (m)	Surcharged Depth (m)	Flooded Volume (m³)	Flow / Cap.	Overflow (l/s)
S1.000	S1	15 Winter	2	+0%					32.032	-0.193	0.000	0.05	
S1.001	S2	15 Winter	2	+0%					31.824	-0.246	0.000	0.07	
S1.002	S3	15 Winter	2	+0%	30/30 Winter				30.736	-0.224	0.000	0.14	
S2.000	S9	15 Winter	2	+0%	100/15 Summer				32.051	-0.099	0.000	0.25	
S2.001	S10	15 Winter	2	+0%	100/15 Summer				31.904	-0.141	0.000	0.29	
S2.002	S11	15 Winter	2	+0%	100/15 Summer				31.745	-0.130	0.000	0.37	
S1.003	S4	15 Winter	2	+0%	30/30 Winter				30.576	-0.249	0.000	0.25	
S1.004	S5	15 Winter	2	+0%	30/30 Winter				30.531	-0.244	0.000	0.27	
S1.005	S6	60 Winter	2	+0%	30/30 Summer				30.463	-0.262	0.000	0.10	
S1.006	S7	60 Winter	2	+0%	30/15 Summer				30.461	-0.064	0.000	0.04	

PN	US/MH Name	Half Drain Time (mins)	Pipe Flow (l/s)	Status	Level Exceeded
S1.000	S1		1.7	OK	
S1.001	S2		6.0	OK	
S1.002	S3		14.7	OK	
S2.000	S9		3.4	OK	
S2.001	S10		11.7	OK	
S2.002	S11		11.7	OK	

©1982-2020 Innovyze

2 year Return Period Summary of Critical Results by Maximum Level (Rank 1) for Storm

PN	US/MH Name	Half Drain Time (mins)	Pipe Flow (l/s)	Status	Level Exceeded
S1.003	S4		26.4	OK	
S1.004	S5		28.5	OK	
S1.005	S6		16.3	OK	
S1.006	S7		4.1	OK	

©1982-2020 Innovyze

30 year Return Period Summary of Critical Results by Maximum Level (Rank 1) for Storm

Simulation Criteria

Areal Reduction Factor 1.000 Manhole Headloss Coeff (Global) 0.500 MADD Factor * 10m³/ha Storage 2.000
Hot Start (mins) 0 Foul Sewage per hectare (l/s) 0.000 Inlet Coeffiecient 0.800
Hot Start Level (mm) 0 Additional Flow - % of Total Flow 0.000 Flow per Person per Day (l/per/day) 0.000

Number of Input Hydrographs 0 Number of Offline Controls 0 Number of Time/Area Diagrams 0
Number of Online Controls 1 Number of Storage Structures 1 Number of Real Time Controls 0

Synthetic Rainfall Details

Rainfall Model FEH Data Type Point
FEH Rainfall Version 2013 Cv (Summer) 0.750
Site Location GB 380224 389297 SJ 80224 89297 Cv (Winter) 0.840

Margin for Flood Risk Warning (mm) 300.0
Analysis Timestep 2.5 Second Increment (Extended)
DTS Status OFF
DVD Status ON
Inertia Status ON

Profile(s) Summer and Winter
Duration(s) (mins) 15, 30, 60, 120, 240, 360, 480, 960, 1440
Return Period(s) (years) 2, 30, 100
Climate Change (%) 0, 0, 45

©1982-2020 Innovyze

30 year Return Period Summary of Critical Results by Maximum Level (Rank 1) for Storm

PN	US/MH Name	Storm	Return Period	Climate Change	First (X) Surcharge	First (Y) Flood	First (Z) Overflow	Overflow Act.	Water Level (m)	Surcharged Depth (m)	Flooded Volume (m³)	Flow / Cap.	Overflow (l/s)	Half Drain Time (mins)	Pipe Flow (l/s)

PN	US/MH Name	Status	Level Exceeded

©1982-2020 Innovyze

30 year Return Period Summary of Critical Results by Maximum Level (Rank 1) for Storm

PN	US/MH Name	Storm	Return Period	Climate Change	First (X) Surcharge	First (Y) Flood	First (Z) Overflow	Overflow Act.	Water Level (m)	Surcharged Depth (m)	Flooded Volume (m³)	Flow / Cap.	Overflow (l/s)
S1.000	S1	15 Winter	30	+0%					32.050	-0.175	0.000	0.11	
S1.001	S2	15 Winter	30	+0%					31.859	-0.211	0.000	0.19	
S1.002	S3	30 Winter	30	+0%	30/30 Winter				30.981	0.021	0.000	0.30	
S2.000	S9	15 Winter	30	+0%	100/15 Summer				32.081	-0.069	0.000	0.55	
S2.001	S10	15 Winter	30	+0%	100/15 Summer				31.970	-0.075	0.000	0.76	
S2.002	S11	15 Winter	30	+0%	100/15 Summer				31.827	-0.048	0.000	0.97	
S1.003	S4	30 Winter	30	+0%	30/30 Winter				30.966	0.141	0.000	0.50	
S1.004	S5	60 Winter	30	+0%	30/30 Winter				30.954	0.179	0.000	0.33	
S1.005	S6	60 Winter	30	+0%	30/30 Summer				30.953	0.228	0.000	0.20	
S1.006	S7	60 Winter	30	+0%	30/15 Summer				30.952	0.427	0.000	0.04	

PN	US/MH Name	Half Drain Time (mins)	Pipe Flow (l/s)	Status	Level Exceeded
S1.000	S1		3.9	OK	
S1.001	S2		15.5	OK	
S1.002	S3		30.0	SURCHARGED	
S2.000	S9		7.6	OK	
S2.001	S10		30.3	OK	
S2.002	S11		30.2	OK	

©1982-2020 Innovyze

30 year Return Period Summary of Critical Results by Maximum Level (Rank 1) for Storm

PN	US/MH Name	Half Drain Time (mins)	Pipe Flow (l/s)	Status	Level Exceeded
S1.003	S4		53.1	SURCHARGED	
S1.004	S5		35.6	SURCHARGED	
S1.005	S6		34.0	SURCHARGED	
S1.006	S7		4.1	SURCHARGED	

©1982-2020 Innovyze

100 year Return Period Summary of Critical Results by Maximum Level (Rank 1) for Storm

Simulation Criteria

Areal Reduction Factor 1.000 Manhole Headloss Coeff (Global) 0.500 MADD Factor * 10m³/ha Storage 2.000
Hot Start (mins) 0 Foul Sewage per hectare (l/s) 0.000 Inlet Coeffiecient 0.800
Hot Start Level (mm) 0 Additional Flow - % of Total Flow 0.000 Flow per Person per Day (l/per/day) 0.000

Number of Input Hydrographs 0 Number of Offline Controls 0 Number of Time/Area Diagrams 0
Number of Online Controls 1 Number of Storage Structures 1 Number of Real Time Controls 0

Synthetic Rainfall Details

Rainfall Model FEH Data Type Point
FEH Rainfall Version 2013 Cv (Summer) 0.750
Site Location GB 380224 389297 SJ 80224 89297 Cv (Winter) 0.840

Margin for Flood Risk Warning (mm) 300.0
Analysis Timestep 2.5 Second Increment (Extended)
DTS Status OFF
DVD Status ON
Inertia Status ON

Profile(s) Summer and Winter
Duration(s) (mins) 15, 30, 60, 120, 240, 360, 480, 960, 1440
Return Period(s) (years) 2, 30, 100
Climate Change (%) 0, 0, 45

©1982-2020 Innovyze

100 year Return Period Summary of Critical Results by Maximum Level (Rank 1) for Storm

PN	US/MH Name	Storm	Return Period	Climate Change	First (X) Surcharge	First (Y) Flood	First (Z) Overflow	Overflow Act.	Water Level (m)	Surcharged Depth (m)	Flooded Volume (m³)	Flow / Cap.	Overflow (l/s)	Half Drain Time (mins)	Pipe Flow (l/s)

PN	US/MH Name	Status	Level Exceeded

©1982-2020 Innovyze

100 year Return Period Summary of Critical Results by Maximum Level (Rank 1) for Storm

PN	US/MH Name	Storm	Return Period	Climate Change	First (X) Surcharge	First (Y) Flood	First (Z) Overflow	Overflow Act.	Water Level (m)	Surcharged Depth (m)	Flooded Volume (m³)	Flow / Cap.	Overflow (l/s)
S1.000	S1	15 Winter	100	+45%					32.072	-0.153	0.000	0.22	
S1.001	S2	120 Winter	100	+45%					31.996	-0.074	0.000	0.12	
S1.002	S3	120 Winter	100	+45%	30/30 Winter				31.995	1.035	0.000	0.23	
S2.000	S9	15 Winter	100	+45%	100/15 Summer				32.472	0.322	0.000	1.16	
S2.001	S10	15 Winter	100	+45%	100/15 Summer				32.362	0.317	0.000	1.44	
S2.002	S11	120 Winter	100	+45%	100/15 Summer				31.995	0.120	0.000	0.60	
S1.003	S4	120 Winter	100	+45%	30/30 Winter				31.992	1.167	0.000	0.38	
S1.004	S5	120 Winter	100	+45%	30/30 Winter				31.992	1.217	0.000	0.40	
S1.005	S6	120 Winter	100	+45%	30/30 Summer				31.991	1.266	0.000	0.24	
S1.006	S7	120 Winter	100	+45%	30/15 Summer				31.988	1.463	0.000	0.04	

PN	US/MH Name	Half Drain Time (mins)	Pipe Flow (l/s)	Status	Level Exceeded
S1.000	S1		7.7	OK	
S1.001	S2		9.6	OK	
S1.002	S3		23.1	SURCHARGED	
S2.000	S9		15.9	SURCHARGED	
S2.001	S10		57.4	SURCHARGED	
S2.002	S11		18.8	SURCHARGED	

©1982-2020 Innovyze

100 year Return Period Summary of Critical Results by Maximum Level (Rank 1) for Storm

PN	US/MH Name	Half Drain Time (mins)	Pipe Flow (l/s)	Status	Level Exceeded
S1.003	S4		40.6	SURCHARGED	
S1.004	S5		43.0	SURCHARGED	
S1.005	S6		41.6	SURCHARGED	
S1.006	S7		4.8	SURCHARGED	

©1982-2020 Innovyze

Appendix H Maintenance Schedule

Operation and Maintenance Requirements for Attenuation Storage Tanks

Maintenance Schedule	Required Action	Typical Frequency
Regular maintenance	Inspect and identify any areas that are not operating correctly. If required, take remedial action	Monthly for 3 months, then annually
	Remove debris from the catchment surface (where it may cause risks to performance)	Monthly
	For systems where rainfall infiltrates into the tank from above, check surface of filter for blockage by sediment, algae or other matter; remove and replace surface infiltration medium as necessary	Annually
	Remove sediment from pre-treatment structures and/ or internal forebays	Annually, or as required
Remedial actions	Repair/rehabilitate inlets, outlet, overflows and vents	As required
Monitoring	Inspect/check all inlets, outlets, vents and overflows to ensure that they are in good condition and operating as designed	Annually
	Survey inside of tank for sediment build-up and remove If necessary	Every 5 years or as required

Ref. Table 21.3, CIRIA C753 'The SuDS Manual'

The maintenance requirements detailed above are to be undertaken by the site owner.

Name :

Position :

Date :

Signed on behalf of the site owner :

Appendix I Concept Designers Risk Assessment

CONCEPT DESIGNER'S RISK ASSESSMENT

Project:	Altrincham Road, Manchester	**Project No:**	14948
Report Reference:	Drainage Strategy		

Prepared by:	Megan Williams	**Date:**	02/11/2022
Checked by:	Aled Williams	**Date:**	16/11/2022
Reviewed by:	Nigel Jones	**Date:**	16/11/2022

Requirement:

The Construction (Design and Management) Regulations 2015 (CDM 2015) place an obligation on the Designer to take all reasonable steps to provide, with the design, sufficient information about the design, construction or maintenance of the structure, to adequately assist the client, other designers and contractors to comply with their duties under CDM. The Designer has undertaken this assessment to identify any extra-ordinary risks, or those that would not be expected on this particular project by an experienced and competent Contractor. The aim is to avoid needless paperwork and bureaucracy and ensure the assessment is project specific, relevant and proportionate to the risk.

DRA Summary

Each of the following risk areas has been considered using the question below. Is a risk present which is considered to be **extra-ordinary or unexpected** in this instance?

If **YES** - A detailed risk assessment is required at design stage
If **UNKNOWN** - Insufficient information has been provided at concept design stage and the risks are unknown. Further consideration must be given at design stage(s)
If **NO** - No further action is required.

Hazard Ref.	Risk Areas	YES, UNKNOWN or NO	Comments
1	Ground Conditions	Unknown	Refer to the Site Investigation Report (Report No. CCL03397.CN07)
2	Hazardous Environment	Unknown	Within close proximity to petrol filling station. To be confirmed at detail design stage.
3	Existing Working Environment	Unknown	To be confirmed at detail design stage
4	Existing Services	Yes	Drainage and power supply serving car wash and car park
5	Proximity to Other Structure(s)	Yes	Petrol filling station to south
6	Near Waterbody / flood risk	No	No nearby watercourses
7	Proximity to Other Activities	Unknown	To be confirmed at detail design stage
8	Sequence of Construction	Unknown	To be confirmed at detail design stage
9	Access	Unknown	Access provided from internal access road off Altrincham Road (A560) to the north
10	Interfaces	Unknown	To be confirmed at detail design stage
11	Confined Space Working	Unknown	To be confirmed at detail design stage
12	Maintenance Considerations	Unknown	To be confirmed at detail design stage
13	Working at Height	Unknown	To be confirmed at detail design stage
14	Steep Slopes	No	
15	Demolition / Refurbishment / Repair	No	
16	Welfare	Unknown	To be confirmed at detail design stage
17	Occupational Health	Unknown	To be confirmed at detail design stage
18	Environmental Issues	Unknown	To be confirmed at detail design stage
19	Other Significant Hazards not Identified Above	Unknown	To be confirmed at detail design stage
20	Residual Risk to Future Users	Unknown	To be confirmed at detail design stage