# NOTES

ORIGINAL A1

DO NOT SCALE FROM THIS DRAWING.
ALL DIMENSIONS TO BE CHECKED ON SITE.
(DRAWINGS MAYBE SCALED FOR LOCAL AUTHORITY & PLANNING PURPOSE ONLY)
COPYRIGHT PROTECTED.

**FOR TENDER**
**DO NOT USE FOR CONSTRUCTION**

CONSULTANT REFERENCES IN DRAWING:

STRUCTURAL - REF/REVISION

0 1 2 3 4 5 6m
Scale 1:125

0 0.20 0.40 0.60 0.80 1.0m
Scale 1:20

0 0.10 0.20 0.30 0.40 0.50m
Scale 1:10

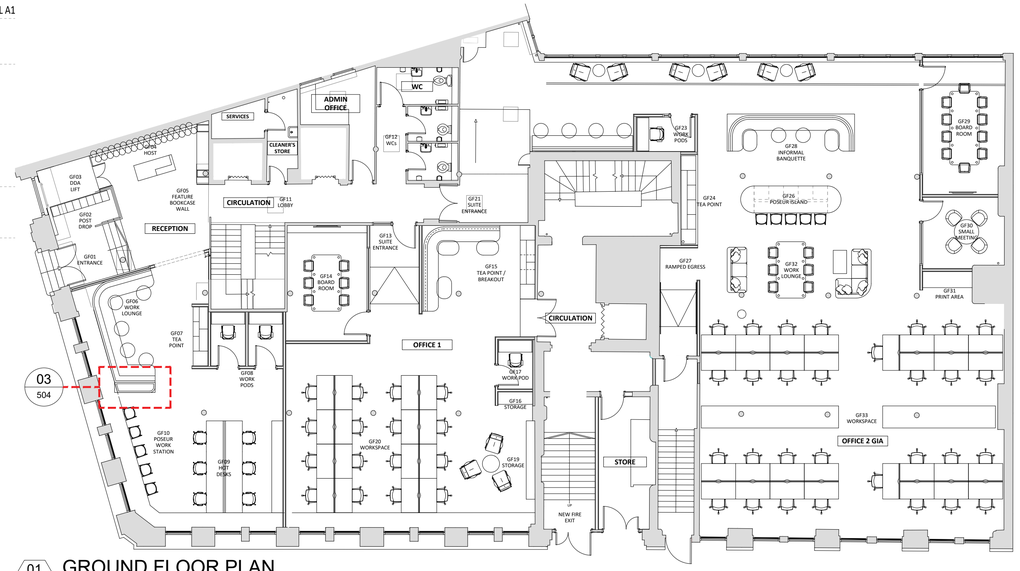


01 / 504 GROUND FLOOR PLAN
SCALE - 1:125 @ A1 AS PROPOSED

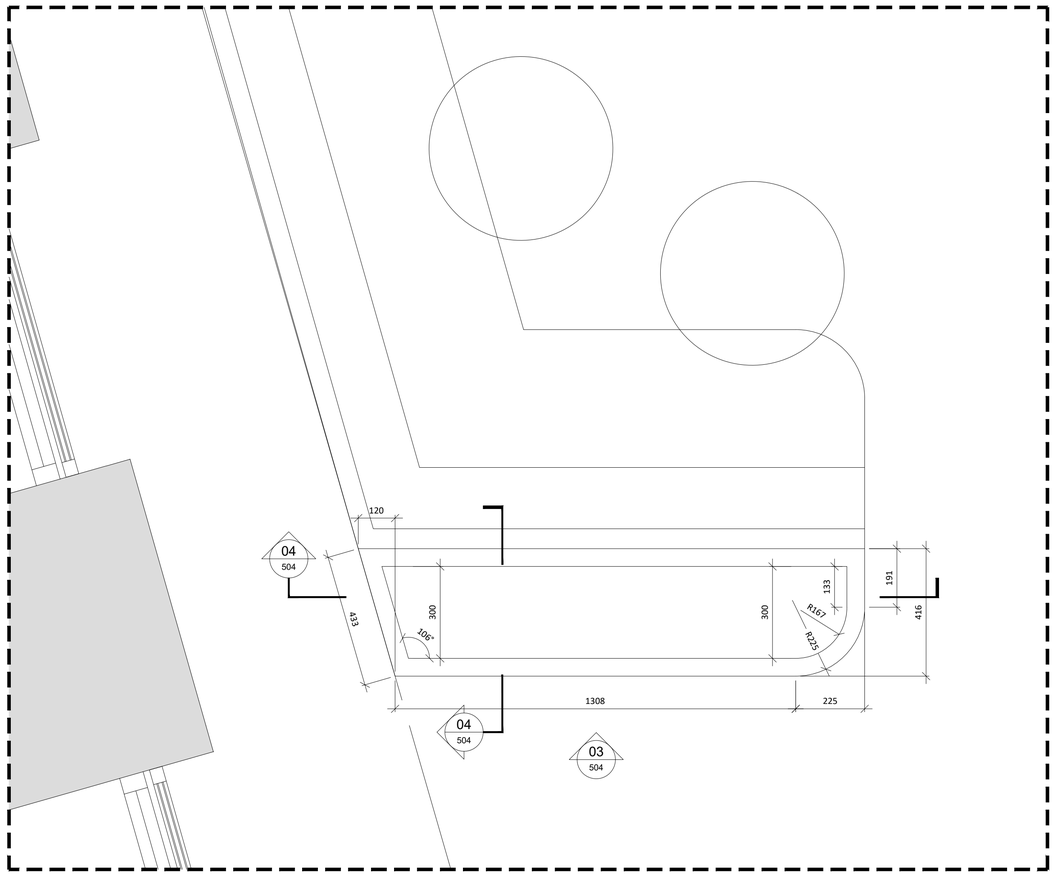


02 / 504 GROUND FLOOR - RECEPTION - PLANTER PLAN
SCALE - 1:20 @ A1 AS PROPOSED

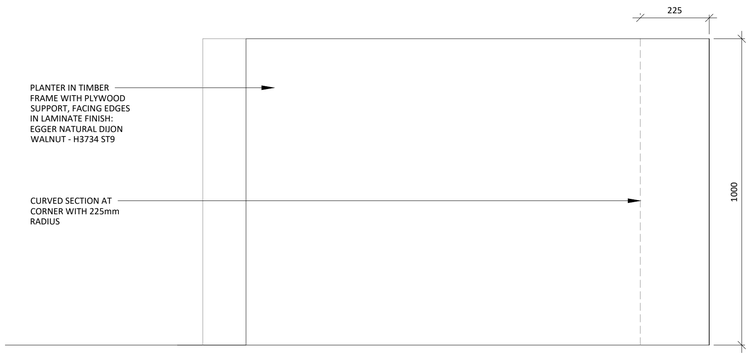


03 / 504 RECEPTION PLANTER ELEVATION
SCALE - 1:20 @ A1 PROPOSED ELEVATION

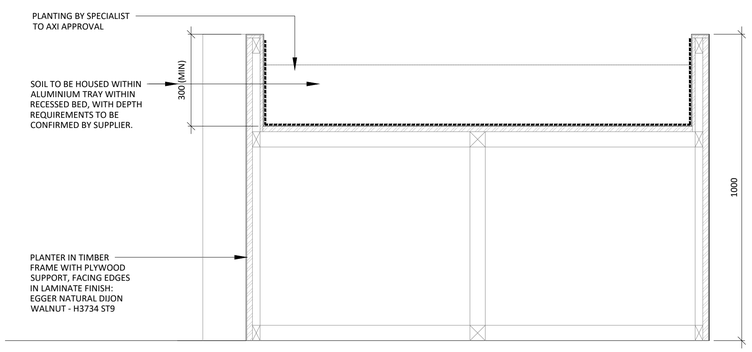


04 / 504 RECEPTION PLANTER ELEVATION
SCALE - 1:20 @ A1 PROPOSED SECTION

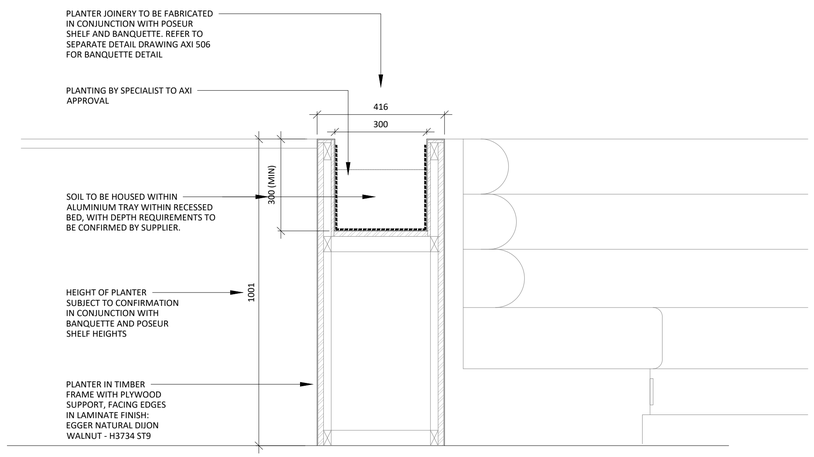


05 / 504 RECEPTION PLANTER SECTION
SCALE - 1:20 @ A1 PROPOSED SECTION

| REV | DATE | DESCRIPTION | DRAWN | CHECKED |
|---|---|---|---|---|
| 4.00 | 21/05/24 | ISSUED FOR TENDER<br>Issued for client review. | SO | JW |

AXI
ADDRESS : 4th FLOOR CALICO 53-55 MOSLEY STREET, MANCHESTER,M2 3HQ
TELEPHONE : +44 (0)161 879 7357
EMAIL : www.axi.studio
COMPANY No : 11847325

CLIENT
bruntwood SciTech

PROJECT
117 - 119
PORTLAND STREET
MANCHESTER

DRAWING REFERENCE
GROUND FLOOR - RECEPTION
PLANTER DETAILS DETAILS
AS PROPOSED

| JOB REFERENCE | DRAWING SCALE | DATE | DRAWN | CHECKED |
|---|---|---|---|---|
| 23 - 192 | varies@A1 | 21.05.24 | SO | JW |

| DRAWING REFERENCE | STAGE | REV |
|---|---|---|
| AXI - 504 | 4 | 00 |