COPYRIGHT

THIS DRAWING IS PROTECTED UNDER COPYRIGHT. COPYRIGHT REMAINS THE PROPERTY OF BRAWN DESIGN LTD UNLESS OTHERWISE ASSIGNED.

STRUCTURAL WORKS

ANY STRUCTURAL INFORMATION ON THIS DRAWING IS INDICATIVE ONLY. NO STRUCTURAL DETAILS TO BE TAKEN FROM THIS DRAWING. ALL STRUCTURAL DETAILS TO BE REFERRED TO A STRUCTURAL ENGINEER.

ALL DIMENSIONS

FIGURED DIMENSIONS ONLY TO BE TAKEN FROM THIS DRAWING. DO NOT SCALE. ALL DIMENSIONS TO BE VERIFIED ON SITE PRIOR TO THE COMMENCEMENT OF WORK. ALL CONTRACTORS MUST VISIT THE SITE AND BE RESPONSIBLE FOR CHECKING ALL SETTING OUT DIMENSIONS. NOTIFY BRAWN DESIGN LTD OF ANY DISCREPANCIES PRIOR TO ANY MANUFACTURE OR CONSTRUCTION WORKS.

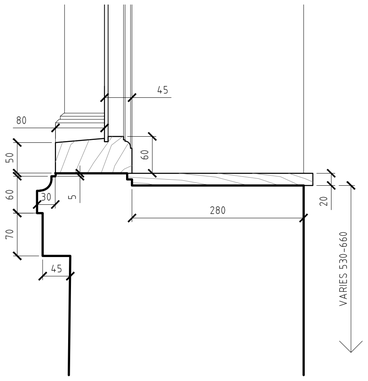

TYPICAL SECTION THRU'
PLINTH DETAIL
SCALE 1:5

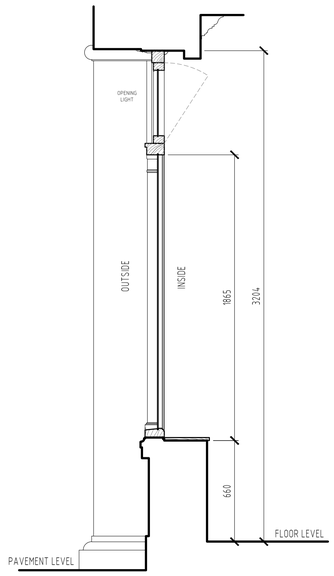

SECTION THRU' A-A
JOHN DALTON STREET
SCALE 1:20

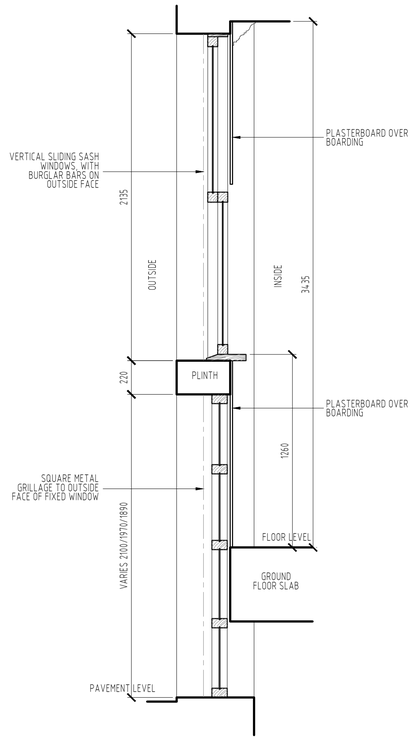

SECTION THRU' B-B
4 YARDS ALLEY
SCALE 1:20

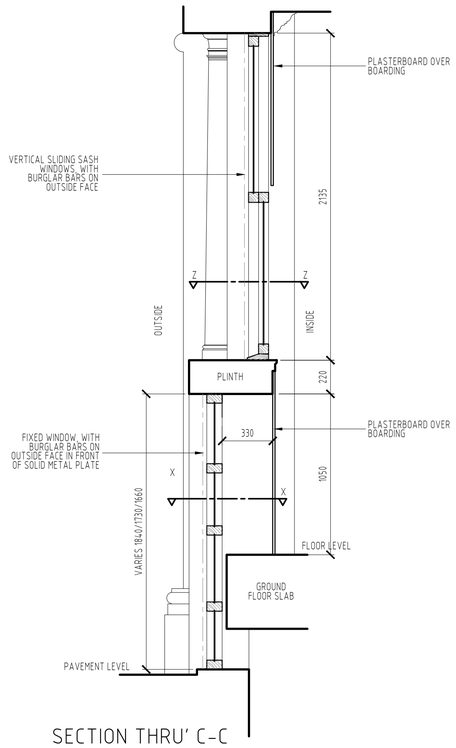

SECTION THRU' C-C
4 YARDS ALLEY
SCALE 1:20

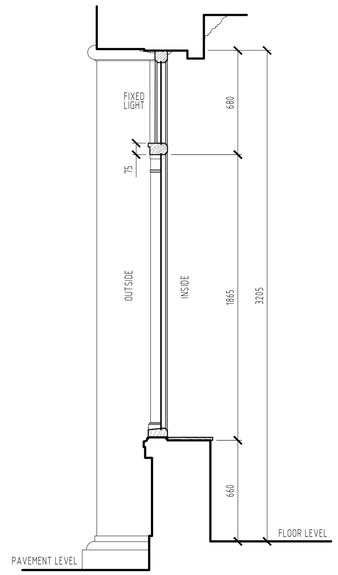

SECTION THRU' D-D
CROSS STREET
SCALE 1:20

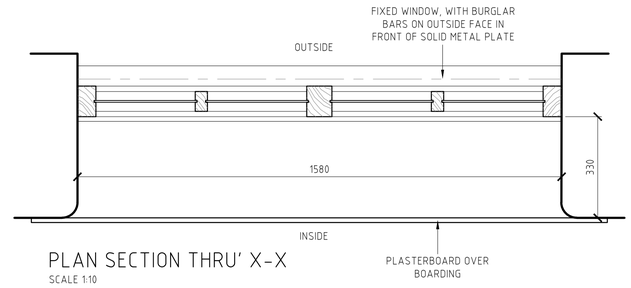

PLAN SECTION THRU' X-X
SCALE 1:10

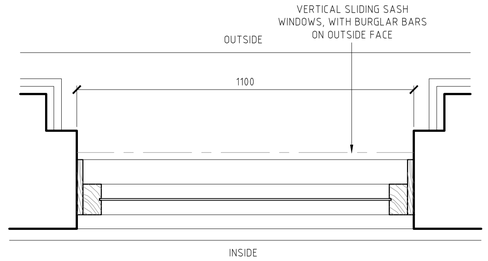

PLAN SECTION THRU' Z-Z
SCALE 1:10

CROSS STREET ELEVATION
SCALE 1:100

4 YARDS ELEVATION
SCALE 1:100

JOHN DALTON ELEVATION
SCALE 1:100

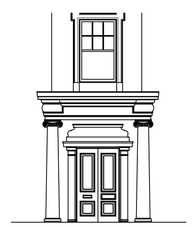

FRONT DOOR ELEVATION
SCALE 1:100

BRAWN DESIGN LIMITED.

BIZ HUB, ROOM G01, MELTON COURT, GIBSON LN,
NORTH FERRIBY. HU14 3HH

EMAIL: RICHARD@BRAWNDESIGN.CO.UK
MOBILE: 07985 344636

CLIENT	PROJECT	DRAWING TITLE	JOB NUMBER	DRAWING No	REVISION	SCALE	DRAWN BY	APPROVED BY
INDIVIDUAL RESTAURANTS FORBICI	MANCHESTER CROSS ST	EXISTING WINDOW DETAILS	2405	107	-	SEE DWG	RCN	DIRECTOR

REV	DATE	NOTES	BY
-	-	-	-

SCALE BAR

1:50 0 1 2 3 4 5M

1:100 0 1 2 3 4 5 6 7 8 9 10M