Technical Submission and Sample Form
Design Intent Verification

Project Name and No:	Manchester Metropolitan University Science & Engineering - 25716
Submission No:	1388B-NGB-ZZ-ZZ-TS-E-020
Material/Product Reference:	Life Safety Generator – 1250kVA / 1000kW
Manufacturer's Name, Address and Contact No:	DT Gen (South), Lumonics House, Valley Drive, Swift Valley Industrial Estate, Rugby, CV21 1TQ.
Proposed Location of Material/Plant on Project:	Newbuild Atrium Areas, 2nd & 4th Floors
Specification References	1388B-HOL-XX-XX-SP-V-000001 MEP Generals Spec (New Build) 1388B-HOL-XX-XX-SP-V-000002 MEP Performance Spec (New Build) 1388B-HOL-XX-XX-SP-V-000010 MEP Generals Spec (Refurb) 1388B-HOL-XX-XX-SP-V-000011 MEP Performance Spec (Refurb) 9.14.1 MMU EMAP 54 Mandatory Equipment Schedule
List of Attachments:	Appendix 1 - Suppler Technical Submission Appendix 2 - Proposed Equipment Layout
Sample Included (Y/N)	No
Compliant with Specification (Y/N) **If No state Non-Compliance**	Yes

Date: **07/04/2021**	Name (Printed) Jamie Hall On behalf of NG Bailey

Approved/Approved with Comments	Name (Printed) **XXX**	Representative of: **Hoare Lea**	Date: **XX/XX/2021**
Comments:			

NG BAILEY
Manchester Metropolitan University – Science & Engineering

Technical Submission

1338B-NGB-ZZ-ZZ-TS-E-020

Title (Life Safety Generator)

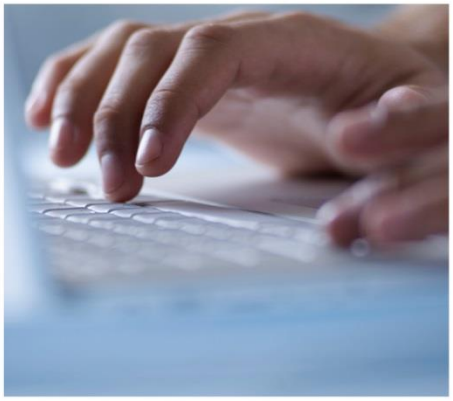

BOWMER + KIRKLAND

Manchester Metropolitan University

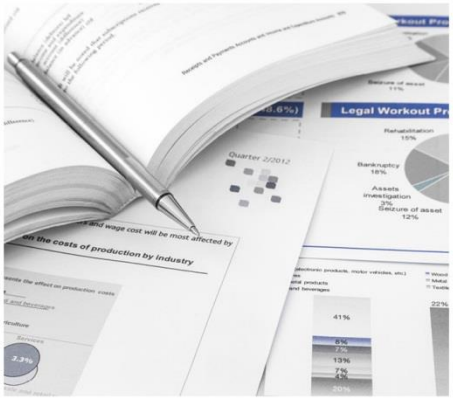

NG Bailey

TECHNICAL SUBMISSION FOR – (Life Safety Generator)

SUMMARY

Technical Submission No.	1388B-NGB-ZZ-ZZ-TS-E-020
Revision:	P01
Package Description:	Life Safety Generator
Package Equipment:	Life Safety Generator – 1250kVA / 1000kW
Proposed Supplier:	DT Gen
Supplier Address:	DT Gen (South), Lumonics House, Valley Drive, Swift Valley Industrial Estate, Rugby, CV21 1TQ.
Building Locations:	Energy Centre TO.ENG.20 Ground Floor
Compliance with Specification:	1388B-HOL-XX-XX-SP-V-000001 MEP Generals Spec (New Build) 1388B-HOL-XX-XX-SP-V-000002 MEP Performance Spec (New Build) 1388B-HOL-XX-XX-SP-V-000010 MEP Generals Spec (Refurb) 1388B-HOL-XX-XX-SP-V-000011 MEP Performance Spec (Refurb) 9.14.1 MMU EMAP 54 Mandatory Equipment Schedule
NGB Contact:	Jamie Hall
NGB Contact Tel:	07528 968 824
NGB Contact E-mail:	jamie.hall@ngbailey.co.uk
Raised By:	Jamie Hall
Date Raised:	7th April 2021
Response Required By:	21st April 2021

EQUIPMENT SELECTION

EQUIPMENT SELECTION**:**

- We have selected an alternative manufacturer / supplier from those listed within the MMU Mandatory Equipment List as both of the listed suppliers declined to quote as part of the original project tender process.
- DT Gen have been selected as the supplier comprising of a FG Wilson set & Perkins engine set as listed on the MMMU Mandatory Equipment List.

EQUIPMENT DESCRIPTION

EQUIPMENT DESCRIPTION**:**

- **Generator Set Summary**
  - Make: FG Wilson
  - Model: P1250P3
  - Engine: Perkins 4012-46TWG2A, 12 Cylinder
  - Alternator: Leroy Somer LL8224H
  - Appx Dimensins: 4788mm(L)x17895mm(W)x2440mm(H)
  - Fuel Consumption: 258 lts/hour @ 100% Load
  - Prime/Continuous: 1250kVA / 1000kW
  - Emergency/Standby: 1375kVA / 1100kW
  - Rating: 3ø, 400/230v, 50Hz, 1500RPM ‘ 0.8pf
  - Breaker Type: 2000Amp, ABB, 3 Pole
  - Noise Levels: 75 dBA @ 1Mts in Free Field Conditions
- **Summary of Included Items**
  - Set mounted set-to-mains synchronising control panel
  - 75dBA plant room attenuation and exhaust gas silencer
  - Exhaust flue extension
  - Air inlet and outlet motorised dampers
  - Free standing bunded day tank with fuel lines to engine
  - Fire fuel isolation valve
  - Factroy acceptance testing of generator set
- **Generator Breaker**
  - Manually operated generator protection breaker located adjacent to generator set within plant room
  - Rated to suit generator set
  - Generator to breaker cabling included
  - Breaker to changeover/switchboard by MEP contractor

- **Engine Heater**
  - Generator set will be fitted with engine water heater to facilitate rapid starting & load acceptance
  - 240V/AC powered c/w fused protection and thermostatic control controlled via the control panel
- **Battery Charger**
  - A 5Amp trickle charger is provided operatee via the control panel
- **Starting System**
  - 24V / DC lead acid battery set
  - Axial starter motor
  - Engine mounted charge alternator
- **Set Mounted Control Panel (Set to Mains)**
  - Generator set to be fitted with a ComAp InteliGen SPTM control panel inclusive of the below specifics
    - AMF with no break return
    - Automatic gen-set start on mains failure
    - GCB & MCB full control
    - Break transfer on mains failure
    - No break returns on mains return c/w soft load transfer
    - Test mode (set runnig & waiting for mains failure with GCB opened)
    - Short time parallel (normally mains protection not required by mains authority)
    - Power control
    - Voltage matching
    - Reverse power protection
    - Long-time parrallel to mains
    - Continuous parallel to mains operation
    - Generator base load & pf control
    - Mains protection (vector shift; voltage; frequency protections)
- **Factory Acceptance Testing**
  - Extended factory test to include the following
    - Load bank type – Reactive
    - Load bank test run @ 100% - 3 hours
    - Load bank test run @ 110% - 1 hour
    - DT Gen basic tests including alarms & shutdowns simulated
    - Complex load acceptance & rejection testing (including chart recording)
    - All fuel required for tests
- **Accoustic Ventilation Equipment**
  - Air inlet attenuator
  - Air inlet fixed blade weather louvre
  - Air outlet attenuator
  - Air outlet fixed blade weather louvre
  - Flexible transition duct for hot air outlet connection
  - Exhaust gas silencer

- Motorised air inlet and air outlet dampers

- **Free Standing Day Tank**
  - Free standing generator day tank c/w return fuel lines
  - DEFRA compliant fully bunded
- **Tank Specification**
  - Lockable 400mm high drop down door above tanks bunded area
  - CTS tank alarm panel with overfill; low fuel & bund leak alarms
  - Hydrostatic contents guage
  - 600mm manway for future inspection/maintenance of tank
  - 50mm fill point
  - Feed & return outlets for fuel pipe work
  - Spare ways for for any additional alarms/monitoring sensors
  - 2,500L capacity
  - 1925mm(L)x1250mm(W)x2300mm(H)
  - Dry weight 550kg
- **Fire Valve**
  - Protection afforded via a mechanical fire valve to isolate the fuel supply in a fire event
  - Fire valve is kept open against the spring pressure by a fuseable link catenary wire located above the generator set
  - Fuseable link is equipped with a microswitch to break the DC supply to the control panel, to either raise an alarm or signal the building fire system
- **Exhaust Flue Extensions**
  - Exhaust flue to be extended from the gas silencer out to atmosphere
  - Multi-application twin walled light weight system to resist pressures up to 5000 PA
  - Suitable for continuous operating temperatures of 760°C and for 1000°C intermittent use
  - Suitable for both internal & external use
- **Generator Flue**
  - Twin walled stainless steel pressure & water resistant CE Approved
- **On-site Load Bank Testing**
  - Allowance for on-site load bank testing and associated commissioning consisting of
    - Load bank type – Reactive
    - Load bank test run @ 100% - 3 hours
    - Load bank test run @100% - 1 hour
    - 25Mts temporary load bank cabling
    - DTG basic tests including alarms & shutdowns simulated
    - Complex load acceptance & rejection testing (including chart recording)
    - All fuel for required tests
- **Commission Generator Set & Final Commissioning**
  - Comprehensive initial process & tests as detailed within Appendix 1
- **Illustrative Generator Equipment Layout**

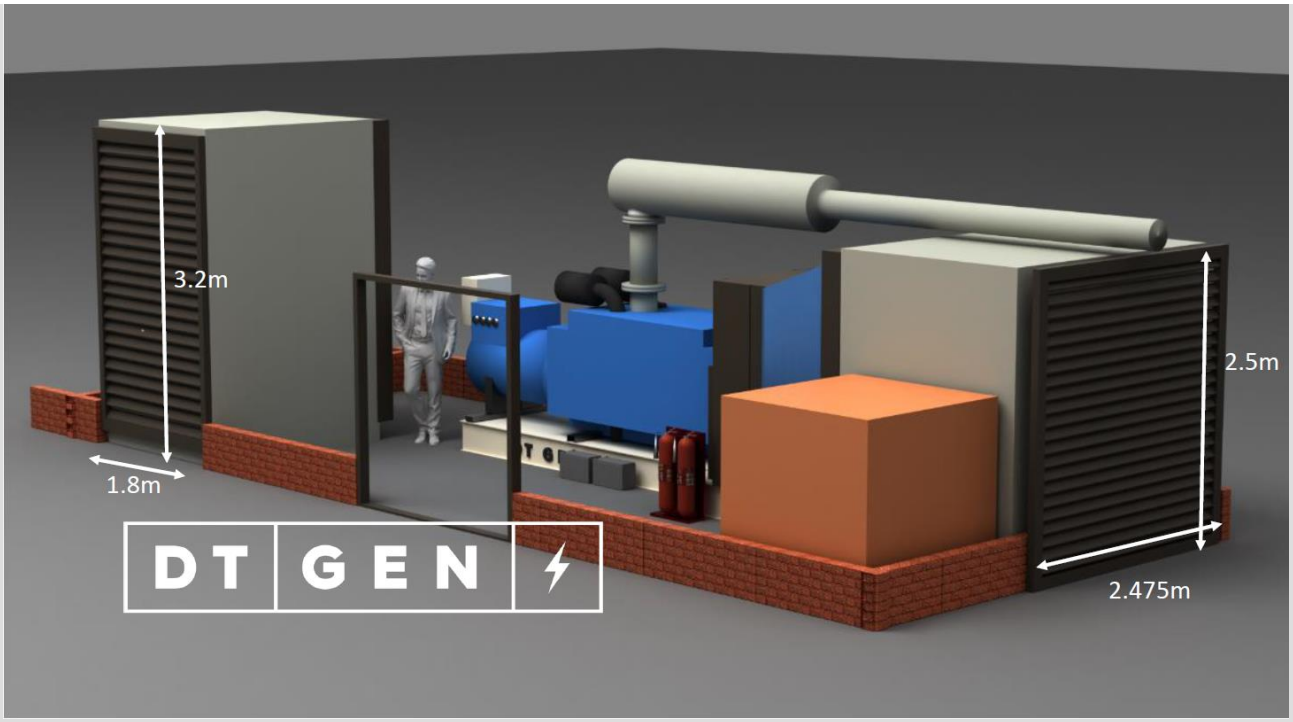
3.2m
1.8m
2.5m
2.475m
DT GEN

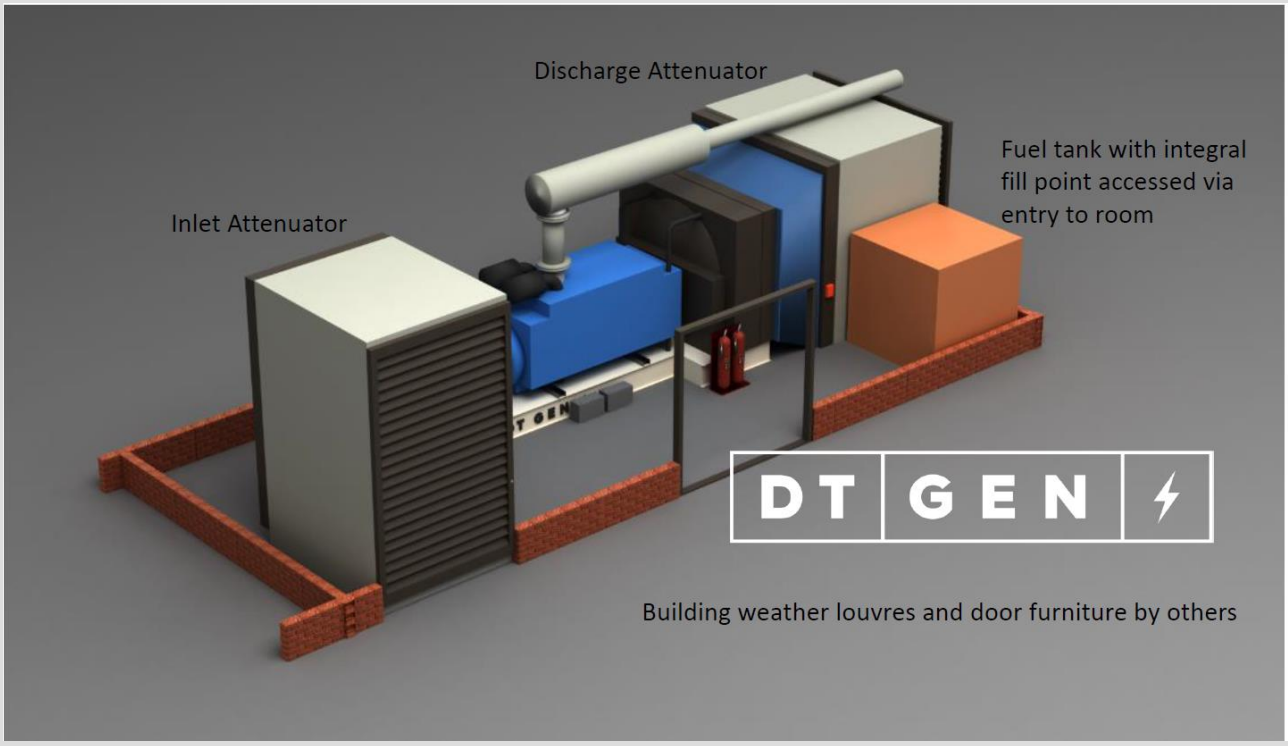
Discharge Attenuator
Fuel tank with integral fill point accessed via entry to room
Inlet Attenuator
DT GEN
Building weather louvres and door furniture by others

SUPPORTING DOCUMENTS

SUPPORTING DOCUMENTS:
• Appendix 1 – Supplier Technical Submission • Appendix 2 – Proposed Equipment Layout

APPROVAL STATUS

COMMENTS:				
STATUS:	A	B	C	(Please Circle)
MADE BY:				
DATE:				

STATUS KEY

A – Approved

B – Approved with comments

C – Rejected with comments

DT GEN

GENERATOR SPECIALISTS

POWER WHEN YOU NEED IT

Manchester Metro Uni

Technical Submission

Contents

Reference	
Project Reference Number	E12902
Project Sales Engineer	Reuben Elliott

Amendment History		
Date	Details	Issue Number
23/03/21	First Issue	TS1

Technical Offer

Generator Set Summary

Make:	FG Wilson
Model:	P1250P3
Engine Type:	Perkins 4012-46TWG2A, 12 Cylinders
Alternator Type:	Leroy Somer LL8224H
Approximate Dimensions:	4788mm L x 1895mm W x 2440mm H
Fuel Consumption:	258 Litres Per Hour at 100% Load
Prime/Continuous:	1250 kVA / 1000 kW
Emergency/Standby:	1375 kVA / 1100 kW
Rating:	3 Phase, 400/230 Volts, 50 Hz, 1500 RPM at 0.8 Power Factor
Breaker Type:	2000 Amp, ABB, 3 Pole
Noise Levels:	75 dBA at 1 Metre in Free field conditions

Summary of Included Items

As part of our offer for the standby generator set, we have also included for the following key supporting items:

- Set mounted set to mains synchronising control panel
- 75 dBA plant room attenuation and exhaust gas silencer
- Exhaust flue extension
- Air inlet and outlet motorised dampers
- Free standing bunded day tank with fuel lines to engine
- Fire fuel isolation valve
- Factory acceptance testing of generator set

Generator Breaker

We have included for a generator protection breaker. This breaker is a manually operated breaker and is installed for the generator sets protection only. The breaker will be installed adjacent to the generator set within the generator plant room. Please note that cabling from the generator alternator to the breaker has been included within our offer. Cabling from the breaker to the changeover/switchboard is not included and is assumed to be part of the electrical contractor's scope of supply. The breaker type and manufacturer will be as per our standard. The rating of the breaker will be suited to the rating of the generator set.

Engine Heater

The generator set will be fitted with engine water heaters; these are appropriate when the generator set is to be sited in a low ambient environment. The heater maintains the engine coolant at a temperature (typically 100°F) which facilitates rapid starting and load acceptance. The heater itself is powered by a 240-volt AC auxiliary supply protected by a fuse inside the main control panel. A thermostatic controller is included to regulate the output temperature to within safe limits. When the generator set is not running the heater is automatically connected to the AC supply through a power relay mounted in the control panel.

Battery Charger

The generator control panel will come complete with a battery trickle charger. The 5-amp battery chargers have been designed to be permanently connected to a battery, keeping it charged to maximum capacity.

The charger will be mounted via DIN rail internal to the control panel. The chargers stylish design includes an LED indicator on the front that shows when the charger is in a normal or overload condition.

The chargers do not include any moving parts to give added durability and reliability. They will also continue to operate during cranking and running. All chargers can accept multiple AC voltage connections.

Starting System

The generator set will be started by DC lead acid batteries. The system voltage will be 24 volts and will comprise of:

- Axial starter motor
- Engine mounted charge alternator
- Panel mounted trickle charger
- Heavy duty industrial grade lead acid starter batteries
- Heavy duty battery cables
- Battery tray with fixing down screws

Generator Paint Colour

The generator and enclosure will be painted to our standard manufacturers colour.

Signage

The generating set will be marked with all appropriate warning signs to relevant European and British Standards including: Voltage, Noise and Automatic machinery warning signs.

Guards

All guards necessary to afford protection from electrical apparatus, moving and hot parts of machinery will be provided to prevent risk of injury to personnel. These guards will comply, where applicable, with BS5304 and the Machinery Directive.

Minimum Load for Prime Applications

For generator sets running prime and not standby, we recommend that a minimum load of 30% is present. Sets operating under 30% may be subject to light load problems which result in the upper glazing of the cylinders.

Documentation

The following is supplied with each generating set:

- 1 set of operation and maintenance manuals.
- 1 set of wiring and cable interface diagrams.
- 1 set of test certificates & warranty registration forms.

Set Mounted Control Panel (Set to Mains)

The generator set will be fitted with a ComAp InteliGen SPTM control panel. The control panel will be set mounted. Panel specification as follows:

- AMF with no break return
- Automatic gen-set start when the main fails
- GCB & MCB full control
- Break transfer on mains failure
- No break returns on mains return with soft load transfer
- Test mode (set running and waiting for mains failure with GCB opened)
- Short time parallel (normally mains protection not required by mains authority)
- Power control
- Voltage matching
- Reverse power protection
- Long-time Parallel to Mains
- Continuous parallel to mains operation
- Generator base load and PF control
- Mains protections (Vector shift, voltage, frequency protections)

Typical Panel Specification

- Mild steel enclosure
- ComAp IGNTC-BB generator control unit
- ComAp IV5 remote display
- ComAp IG-AVRi AVR interface
- ComAp IG-AVRi transformer
- 12 x Programmable binary inputs
- 12 x Programmable binary output
- 4 x Programmable analogue inputs
- Deep Sea 24V 5A static battery charger
- 4kW 1PH Jacket water heater supply c/w output protection and circuit contactor
- ESD button c/w padlockable chrome collar & legend
- 8 x SP control MCBs
- 2 x TP sensing MCBs (generator and bus)
- 1 Set of control relays (12)
- 2 x Aux contactors
- 1 Set of engine interface terminals
- 1 Set of alternator interface terminals
- 1 Set of auxiliary interface terminals
- 1 Set of internal and external engraved labels
- 1 Set of electrical schematics in auto-cad format
- 1 Sets of O&M manuals

Important Clarifications for Mains Parallel Operation (Set to Mains)

The generator set offered is fitted with a set to mains synchronising control panel. This will monitor the generator voltage and mains voltage at the point of set to mains synchronisation. To enable the set to monitor these voltages and currents, CTs and VTs must be fitted by the switchboard supplier. Control cabling from the switchboard to the generator must also be provided by others, DTG will issue a cable schedule to the electrical contractor.

We have assumed that the mains supply is a single source. The control panel offered will not cater for multiple sets of mains. Should this be required please confirm and we will price accordingly.

The ComAp panel will only control the mains and generator breakers should there be a requirement to control any other breakers or bus couplers then additional costs will be incurred.

The generator output breaker is not motorised as we have assumed the switchboard GCB will be controlled instead. Please advise if a motorised breaker is required and we will price accordingly.

Please note a day allowance has been made in our commercial offer, should any additional days be required to commission the system an additional day rate of £950 will apply.

We have assumed that the following will be provided by others:

1. Motorised mains and generator breakers within the LV switchboard.
2. G99 protection relay at point of set to mains sync.
3. G99 agreement with DNO.
4. G99 control cabling and testing of relay.
5. CTs & VTs at LV switchboard.
6. Neutral earth contactor, if required by the REC.
7. Control cabling from switchboards to generator panels.
8. DC power pack at switchboard, this is the preferred option for breaker control to prevent brown outs.
9. G99 is to override mains control, direct action. G99 must signal back to generator control via volt free contacts for auxiliary mains fail.
10. Parallel limit timer.
11. All agreements for export and works required for export carried out by others if required.

We would recommend that a technical interface meeting be held between ourselves the M&E contractor, Consultant and the switchboard manufacturer to confirm that a fully operational system will be provided and all parties fully understand their scope of supply and responsibilities.

Factory Acceptance Testing

Whilst we test 100% of our generator sets before dispatch, we have dedicated test cells for special or extended tests. As part of our offer we have included for an extended factory test to be carried out. This test includes the following:

- Load bank type - Reactive
- Load bank test run at 100% load - 3 hour
- Load bank test run at 110% load - 1 hour
- DT Gen basic tests including alarms and shutdowns simulated
- Complex load acceptance & rejection testing (including chart recording)
- All fuel required for tests

Please note if no travel/accommodation costs have been shown on our commercial offer, we assume that the customer will make his own way to the test facility and cover their own travel expenses.

Acoustic Ventilation Equipment

The generator set will be installed within a dedicated plant room. This plant room will be constructed by others and prepared openings for attenuation shall be made prior to the generator set installation. These openings are to be sized as per DT Gen's recommendations to allow the installation of the generator set and the plant room attenuation equipment.

Openings are required as internal combustion engines require a liberal supply of cool, clean air for combustion. If the air entering the engine intake is too warm or too thin, the engine may not produce its rated power.

Operation of the engine and alternator radiates heat into the plant room and raises the ambient temperature. Therefore, ventilation is necessary to limit room temperature rise and provide clean, cool air to the engine.

By creating air inlet and outlet apertures within the wall this then results in noise break out via such holes and therefore plant room attenuation equipment is then required. Plant room attenuation dampens the noise created by the generator set and the air flow through the room.

Constructional Specification

The silencers are constructed with a 1.6mm thick welded galvanised or zinc coated steel outer skin, with pre drilled, 50 x 50 x 5mm thick rolled steel angle flanges.

The internal acoustic splitters are constructed using 1.6mm thick steel casings, with a heavy density rock fibre acoustic infill having a scrim cloth facing to prevent fibre erosion, in turn being retained in place behind 0.7mm thick perforated galvanised sheet steel.

The complete assembly can have an external primer/undercoated paint finish, suitable for additional paint treatment if required.

The heavy density rock fibre acoustic infill is inert, vermin proof and non-hygroscopic. It has a Class 1 Spread of Flame Certificate to BS 476, part 6.

Inclusions

We have included the following equipment:

- Air inlet attenuator
- Air inlet fixed blade weather louvre
- Air outlet attenuator
- Air outlet fixed blade weather louvre
- Flexible transition duct for hot air outlet connection
- Exhaust gas silencer
- Motorised air inlet and air outlet dampers

Exclusions

Please note the following exclusions and works assumed by others:

- All builders work including openings for attenuation/louvres.
- Infill of walls/sealing of room after attenuation/louvre installation.

Dimensions

Item	Length (mm)	Width (mm)	Height (mm)
Air Inlet Attenuator	2100	2400	2400
Air Outlet Attenuator	2100	2400	2400
Transition Duct Work	500	N/A	N/A
Exhaust Gas Silencer	3000	2000	1000

Free Standing Day Tank

As part of our offer we have included for a free standing generator day tank. This day tank has been configured to allow direct feeding of the generator set via feed and return fuel lines.

The fuel tank has been built to comply with environmental regulations and comes fully bunded. This tank satisfies the pollution controls regulations and is classed as DEFRA compliant.

Typical Tank Specification

- Lockable 400mm high drop down door above the tanks bunded area
- Space within bunded area for tank alarm panels and contents gauges
- CTS tank alarm panel with overfill, low fuel and bund leak alarms
- Hydrostatic contents gauge
- 600mm manway for future inspection/maintenance of tank
- 50mm fill point
- Feed and return outlets for fuel pipe work
- Spare ways for any additional alarms/monitoring sensors

Tank Dimensions and weights

The following weights and dimensions are provisional only and confirmation from our project delivery team should be sought prior to any civil works commencing. Note, if a bespoke tank is required which differs from the below, then additional costs may apply.

Tank Capacity: 2,500L – Dimensions: 1,925mm L x 1,250mm W x 2,300mm H (Dry weight: 550kg)

Fire Valve

The fuel supply to the generator set engine will be protected by the use of a mechanical fire valve to isolate the fuel supply to the engine in the event of a fire. The fire valve is kept open against the spring pressure by a fusible link and catenary wire system located above the generator set. The fire valve is also equipped with a micro-switch that will break the DC supply to the control panel and raise an alarm and/or link to the building fire alarm system.

Exhaust Flue Extensions

The exhaust flue will be extended from the gas silencer out to atmosphere, this will be achieved by use of the Flanged System (FS). This is a multi-application twin walled product designed to convey gases, particles, fumes, smoke and products of combustion from a wide range of engineering combustion and process equipment. It is a lightweight engineered system designed to resist pressure up to 5000 PA.

FS is suitable for a continuous flue gas operating temperature of 760°C and for 1000°C intermittent use and can be used internally and externally. The system consists of straight lengths and a variety of fittings, which in combination with its pressure resistance features, enables it to be used in a multiplicity of configurations.

Generator Flue

To supply and install twin walled stainless steel pressure and water-resistant CE APPROVED flue from 1No. generator. Each to adapt, running horizontally approx. 3.5metres c/w 1No. 90 turn finishing with a horizontal terminal. To include adaptors, elbows, bracketry, storm collar (upstand by others), top stub terminal etc to allow the installation of the above in one visit.

Inclusions

- Carriage (standard delivery)*
- Installation
- Site survey & measuring
- Full CAD Drawing
- Full RAMS

*Please note if FORS delivery is required this will need to be costed separately.

Exclusions

- Connection of condensate pipe work
- Assumed adequate fresh air
- Making Good/Builderswork/Fire stopping/On site hole marking
- Any propitiatory boiler/water heater/plant connection accessories NRV's
- Access/Scaffold
- Testing/Attenuation
- Warranty/guarantee of existing flue
- Roofing works
- Removal of existing

Testing

Please note the latest IGEM Edition 4 recommends that all flue systems are pressure tested. However this is a recommendation only and not British standard or regulation, we see the requirement for pressure testing on any system not required, with the exception of generator flues noting the high pressures. Also the test IGEM recommend is a standard ductwork test and is very marginal compared to what testing our flue systems undergo in factory and to be certified CE APPROVED. By all means if pressure testing is requested we can quote for this.

Fire Spacing

Please note that single wall flue requires 300mm from OD to any combustible materials, twin walled however requires 50mm from combustibles.

Load Bank Testing

We have included for the hire of a mobile load bank to test the generator set under load. Our offer includes for the temporary setting up of this portable load bank and the cable connections onto a suitable and safe load bank connection point. Our engineers will install and test the temporary load cables prior to any load runs. Please see below inclusions:

- Load bank type - Reactive
- Load bank test run at 100% load - 3 hour
- Load bank test run at 110% load - 1 hour
- 25m temporary cables
- DTG basic tests including alarms and shutdowns simulated
- Complex load acceptance & rejection testing (including chart recording)

As part of our offer we have shown option costs for the following:

- All fuel required for tests

Please note that we have included for labour resource to install 25m of temporary cables, if the run exceeds this then additional labour resources will be charged and additional cable hire.

Commission Generator Set

Initial process & tests shall be as follows:

- Remove any temporary coverings used during transit.
- Remove any identified transit brackets
- Check installation of generator, ensure that base frame is level in all directions and the vibration absorbing devices are properly installed in the correct locations
- Check pipe connections and valves etc.
- Check air cleaners for cleanliness and security
- Check the flexible belts on the engine for correct tension
- Secure all guards and covers
- Check electrical component connections on the engine
- Check battery charge alternator wiring on the engine for tight connections
- Check Generator is OFF
- Check battery electrolyte levels and the specific gravity of each cell
- Connect Batteries
- Connect the starter battery leads to the starter motor and ensure sufficient clearances between positive connection and metalwork
- Connect battery leads to batteries ensuring correct polarity. (+ve to +ve and -ve to –ve).
- Energise Charger
- After 2 hours' record Voltage
- Check auxiliary connection has been connected to correct terminals and test voltage. Switch On.
- Connect auto start signal to correct terminals and test by shorting at Switchboard/Changeover that signal is correct using meter
- Open up control panel, generator breaker enclosure etc. and check all components and connections are secure. Pay particular attention to the power connections
- Check all cubicles and panels are clean and free from dust and debris
- Check panel hinges and locks are correct and working
- Check oil and water levels in engine and visually inspect for leaks on engine.
- Check sump plug is secure and any drain taps closed on cooling system
- Open up fuel supply and check for leaks on engine
- Remove alternator terminal box top plate and check terminals for tightness.
- Check Alternator is free from dust and debris.
- Refit top plate.
- Check that all earth cables are in place and secure.
- Check exhaust mountings, connections etc.
- Check E Stop for operation, connections etc.
- Switch on all heaters, preferably in good time before running engine

Final Commissioning

When the pre-commissioning checks have been completed, the generator set will undergo its final commissioning. This involves the following checks and runs:

- Check Generator output MCB is off and all cables secure
- Start Generator by switching the controller to Manual mode
- Confirm Generator starts
- Check and record Voltage L-L
- Check and record Voltage L-N
- Check and record frequency
- Check and record oil pressure
- Check and record engine temperature
- Check and record battery voltage
- Check and record engine speed
- Check the engine driven charge alternator is working
- Check the battery charger & heater are operation and that they both disconnect automatically when the generator runs
- Visually inspect engine for any oil, water or fuel leaks.
- Check the operation of all alarms and shut downs

After the initial run and checks have been carried out, a mains fail test will then be carried out. Paper work will be completed and issued to customer.

P1250P3_P1375E3

Output Ratings

Voltage, Frequency		Prime	Standby
400/230 V, 50 Hz	kVA	1250	1375
	kW	1000	1100
480/277V, 60 Hz	kVA	1250	1375
	kW	1000	1100

Ratings at 0.8 power factor.
Please refer to the output ratings technical data section for specific generator set outputs per voltage.

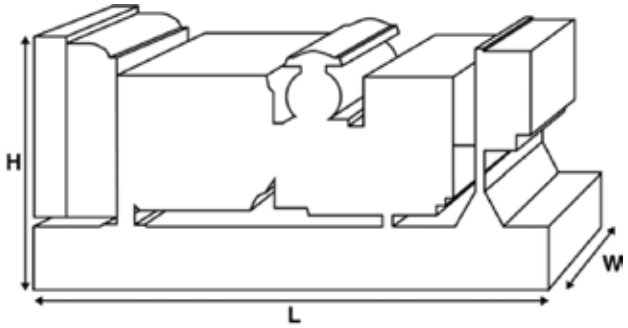

Dimensions and Weights

Length	mm	4788 (188.5)
Width	mm	1895 (74.6)
Height	mm	2440 (96.1)
Weight (Dry)	kg	8884 (19586)
Weight (Wet)	kg	9080 (20018)

Ratings in accordance with ISO 8528, ISO 3046, IEC 60034, BS5000 and NEMA MG-1.22.
Generator set pictured may include optional accessories.

Prime Rating

These ratings are applicable for supplying continuous electrical power (at variable load) in lieu of commercially purchased power. There is no limitation to the annual hours of operation and this model can supply 10% overload power for 1 hour in 12 hours.

Standby Rating

These ratings are applicable for supplying continuous electrical power (at variable load) in the event of a utility power failure. No overload is permitted on these ratings. The alternator on this model is peak continuous rated (as defined in ISO 8528-3).

Standard Reference Conditions

Note: Standard reference conditions 25°C (77°F) Air Inlet Temp, 100m (328 ft) A.S.L. 30% relative humidity.
Fuel consumption data at full load with diesel fuel with specific gravity of 0.85 and conforming to BS2869: 1998, Class A2.

FG Wilson offer a range of optional features to allow you to tailor our generator sets to meet your power needs.
Options available include:

- Upgrade to CE Certification
- A wide range of Sound Attenuated Enclosures
- A variety of generator set control and synchronising panels
- Additional alarms and shutdowns
- A selection of exhaust silencer noise levels

For further information on all of the standard and optional features accompanying this product please contact your local Dealer or visit:

www.fgwilson.com

P1250P3_P1375E3

Ratings and Performance Data

Engine Make		Perkins	
Engine Model:		4012-46TWG2A	
Alternator Make		Leroy Somer	
Alternator Model:		LL8224H	
Control Panel:		DSE7410	
Base Frame:		Heavy Duty Fabricated Steel	
Circuit Breaker Type:		Options Available	
Frequency:		50 HZ	60 HZ
Engine Speed: RPM	rpm	1500	1800
Fuel Tank Capacity:	litres (US gal)	N/A (N/A)	
Fuel Consumption Prime	litres (US gal)/hr	258 (68.2)	266 (70.3)
Fuel Consumption Standby	litres (US gal)/hr	284.9 (75.3)	298 (78.7)

Engine Technical Data

No. of Cylinders		12
Alignment		VEE
Cycle		4 STROKE
Bore	mm (in)	160 (6.3)
Stroke	mm (in)	190 (7.5)
Induction		TURBOCHARGED
Cooling Method		WATER
Governing Type		ELECTRONIC
Governing Class		ISO 8528
Compression Ratio		13.0:1
Displacement	L (cu. in)	45.8 (2797.5)
Moment of Inertia:	kg m^2 (lb/in^2)	19.3 (65951)
Voltage		24
Ground		Negative
Battery Charger Amps		40
Engine Weight Dry	kg (lb)	4440 (9788)
Engine Weight Wet	kg (lb)	4604 (10150)

Engine Performance Data		50 Hz	60 Hz
Engine Speed	rpm	1500	1800
Gross Engine Power Prime	kW (hp)	1106 (1483)	1113 (1493)
Gross Engine Power Standby	kW (hp)	1217 (1632)	1224 (1641)
BMEP Prime	kPa (psi)	1930 (279.9)	1619 (234.8)
BMEP Standby	kPa (psi)	2124 (308)	1780 (258.2)

P1250P3_P1375E3

Fuel System

Fuel Filter Type:			Replaceable Element		
Recommended Fuel:			Class A2 Diesel		
Fuel Consumption at		110 % Load	100 % Load	75 % Load	50 % Load
50 Hz Prime:	l/hr (US gal/hr)	284.9 (75.3)	258 (68.2)	197 (52)	145 (38.3)
50 Hz Standby	l/hr (US gal/hr)	-	284.9 (75.3)	214.4 (56.6)	154.7 (40.9)
60 Hz Prime	l/hr (US gal/hr)	298 (78.7)	266 (70.3)		
60 Hz Standby	l/hr (US gal/hr)	-	298 (78.7)		

(Based on diesel fuel with a specific gravity of 0.85 and conforming to BS2869, class A2

Air System		50 Hz	60 Hz
Air Filter Type:		Replaceable Element	
Combustion Air Flow Prime	m^3/min (cfm)	102 (3602)	109 (3849)
Combustion Air Flow Standby	m^3/min (cfm)	109 (3849)	114 (4026)
Max. Combustion Air Intake Restriction	kPa	4 (16.1)	

Cooling System		50 Hz	60 Hz
Cooling System Capacity	l (US gal)	208 (54.9)	196 (51.8)
Water Pump Type:		Centrifugal	
Heat Rejected to Water & Lube Oil: Prime	kW (Btu/min)	372 (21155)	387 (22008)
Heat Rejected to Water & Lube Oil: Standby	kW (Btu/min)	401 (22804)	450 (25591)
Heat Radiation to Room*: Prime	kW (Btu/min)	140.3 (7979)	133 (7564)
Heat Radiation to Room*: Standby	kW (Btu/min)	154.3 (8775)	147 (5175)
Radiator Fan Load:	kW (hp)	38 (51)	51 (68.4)
Radiator Cooling Airflow:	m^3/min (cfm)	1350 (47675)	1770 (62507)
External Restriction to Cooling Airflow:	Pa (in H2O)	250 (1)	250 (1)

*: Heat radiated from engine and alternator
Designed to operate in ambient conditions up to 50°C (122°F).
Contact your local FG Wilson Dealer for power ratings at specific site conditions.

Lubrication System

Oil Filter Type:		Spin-On, Full Flow
Total Oil Capacity:	l (US gal)	177 (46.8)
Oil Pan Capacity:	l (US gal)	159 (42)
Oil Type:		API CH4 15W-40
Oil Cooling Method:		WATER

Exhaust System		50 Hz	60 Hz
Maximum Allowable Back Pressure:	kPa (in Hg)	5 (1.5)	
Exhaust Gas Flow: Prime	m^3/min (cfm)	230 (8122)	235 (8299)
Exhaust Gas Flow: Standby	m^3/min (cfm)	230 (8122)	235 (8299)
Exhaust Gas Temperature: Prime	°C (°F)	422 (792)	430 (806)
Exhaust Gas Temperature: Standby	°C (°F)	422 (792)	430 (806)

P1250P3_P1375E3

Alternator Physical Data

No. of Bearings:	1
Insulation Class:	H
Winding Pitch:	2/3
Winding Code	6S
Wires:	6
Ingress Protection Rating:	IP23
Excitation System:	AREP
AVR Model:	R450M

* dependant on voltage code selected

Alternator Operating Data

Overspeed: rpm		2250
Voltage Regulation: (Steady state)	%	+/- 0.5
Wave Form NEMA = TIF:		50
Wave Form IEC = THF:	%	2
Total Harmonic content LL/LN:	%	3.5
Radio Interference:		EN61000-6
Radiant Heat: 50 Hz	kW (Btu/min)	65.3 (3714)
Radiant Heat: 60 Hz	kW (Btu/min)	57 (3242)

Alternator Performance Data 50 Hz:

Voltage Code		415/240 V	400/230 V	380/220 V	
Motor Starting Capability*	kVA	3093	2883	2613	
Short Circuit Capacity**	%	300	300	300	300
Reactances	Xd	3.564	3.836	4.25	
	X'd	0.173	0.186	0.206	
	X"d	0.148	0.148	0.164	

Alternator Performance Data 60 Hz

Voltage Code		480/277 V	380/220 V			440/254 V
Motor Starting Capability*	kVA	3430	2192			2906
Short Circuit Capacity**	%	300	300	300	300	300
Reactances	Xd	3.196	5.1			3.804
	X'd	0.155	0.247			0.184
	X"d	0.124	0.197			0.147

Reactances shown are applicable to prime ratings.

*Based on 30% voltage dip at 0.4 power factor.

** With optional independant excitation system (PMG / AUX winding)

P1250P3_P1375E3

Output Ratings 50 Hz

	Prime		Standby	
Voltage Code	kVA	kW	kVA	kW
415/240V	1250	1000	1375	1100
400/230V	1250	1000	1375	1100
380/220V	1250	1000	1375	1100
230/115V				
220/127V				
220/110V				
200/115V				
240V				
230V				
220V				

Output Ratings 60 Hz

	Prime		Standby	
Voltage Code	kVA	kW	kVA	kW
480/277V	1250	1000	1375	1100
440/254V	1250	1000	1375	1100
416/240V				
400/230V				
380/220V	1250	1000	1375	1100
240/139V				
240/120V				
230/115V				
220/127V				
220/110V				
208/120V				
240/120				
220/110				

P1250P3_P1375E3

Dealer Contact Details

Documentation

Operation and maintenance manual including circuit wiring diagrams.

Generator Set Standards

The equipment meets the following standards: BS5000, ISO 8528, ISO 3046, IEC 60034, NEMA MG-1.22.

Warranty

6.8 – 750 kVA electric power generation products in prime applications the warranty period is 12 months from date of start-up, unlimited hours (8760). For standby applications the warranty period is 24 months from date of start-up, limited to 500 hours per year.

730 – 2500 kVA electric power generation products in prime applications the warranty period is 12 months from date of start-up, unlimited hours (8760 hours) or 24 months from date of start-up, limited to 6000 hours. For standby applications the warranty period is 36 months from date of start-up, limited to 500 hours per year.

FG Wilson manufactures product in the following locations:
Northern Ireland • Brazil • China • India
With headquarters in Northern Ireland, FG Wilson operates through a Global Dealer Network.
To contact your local Sales Office please visit the FG Wilson website at www.fgwilson.com.

FG Wilson is a trading name of Caterpillar (NI) Limited.

In line with our policy of continuous product development, we reserve the right to change specification without notice.

@Perkins®

Technical Data

4000 Series

4012-46TWG2A
4012-46TWG3A

Diesel Engine - ElectropaK

Basic technical data

Number of cylinders . ... .12
Cylinder arrangement... ... ... Vee 60°
Cycle ... ... 4 stroke, compression ignition
Induction system .. .. turbocharged
Combustion system.. ... ... direct injection
Compression ratio ... ... 13:1 nominal
Bore.. ... ... 160 mm
Stroke ... ... 190 mm
Cubic capacity .. .. 45·482 litres
Direction of rotation .. .. clockwise viewed on flywheel
Firing order ... ... $1^A,6^B,5^A,2^B,3^A,4^B,6^A,1^B,2^A,5^B.4^A,3^B$
Cylinder 1 . ...furthest from flywheel
Note: Cylinders designated 'A' are on the right hand side of the engine when viewed from the flywheel end.

Total weight of ElectropaK

	Units	Temperate	Tropical
Engine - dry	kg	4440	4440
ElectropaK - dry (1)	kg	5220	5283
ElectropaK - wet (1) (2)	kg	5547	5615

1. Includes fuel cooler
2. Includes engine lubricating oil and water jacket

Overall dimensions of ElectropaK

	Units	Height	Length	Width
Temperate	mm	2255	3714	1780
Tropical	mm	2255	3714	1978

Moment of inertia (mk²)

	Units	4012-46TWG2A	4012-46TWG3A
Flywheel	kgm²	9,57	9,57
Engine	kgm²	9,73	9,73

Cyclic irregularity

For engine/flywheel maximum:
-4012-46TWG2A @ 1500 rev/min.. ... ... 1·752
-4012-46TWG3A @ 1500 rev/min.. ... ...1·752

Ratings

Steady state speed stability at constant load . ... ± 0,25%
Electrical ratings are based on average alternator efficiency and are for guidance only (0.8 power factor being used).

Operating point

Engine speed ... ...1500 rev/min
Static injection timing . ... .spill timing 22°
Cooling water exit temperature .. .. < 98 °C

Performance

Note: All data based on operation to ISO 3046/1, BS 5514 and DIN 6271 standard reference conditions.

Estimated sound pressure level at 1 metre ... ... 111 dB(A)
Note: Noise levels represent highest recorded at 1500 rev/min

For engines operating in ambient conditions other than the standard reference conditions stated below, a suitable de-rate must be applied.
De-rate tables for increased ambient temperatures and / or altitude are available, please contact Perkins Applications Department

Test conditions

-air temperature.. ... ...25 °C
-barometric pressure .. ..100 kPa
-relative humidity 30%
-air inlet restriction at maximum power (nominal)... ... ... 2,5 kPa
-exhaust back pressure at maximum power (nominal)... ... 3,0 kPa
-maximum fuel temperature (inlet pump) ... ...58 °C
For test conditions relevant to data on load acceptance, please refer to Load acceptance (cold) on page 22 of this document.

General installation - 4012-46TWG2A (temperate)

Designation	Units	Type of operation and application		
		Base	Prime	Standby
Gross engine power	kWb	884	1106	1217
Fan and battery charging alternator power	kW	51		
Net engine power	kWm	833	1055	1166
Brake mean effective pressure (gross)	kPa	1543	1930	21,24
Combustion air flow at ISO conditions	m³/min	90	102	109
Exhaust gas temperature (max) after turbo	°C	422		
Exhaust gas flow (max) at atmospheric pressure	m³/min	180		
Boost pressure ratio	-	2,38	2,86	3,09
Mechanical efficiency	%	88.0	90.2	91.0
Overall thermal efficiency (nett)	%	39.46	39.81	39.66
Friction and pumping power losses	kWm	120		
Mean piston speed	m/s	9,5		
Engine coolant flow	l/min	948		
Typical GenSet electrical output (0.8pf)	kVA	989	1253	1385
	kWe	791	1002	1108
Assumed alternator efficiency	%	95		

General installation - 4012-46TWG2A (Tropical)

Designation	Units	Type of operation and application		
		Base	Prime	Standby
Gross engine power	kWb	891	1113	1224
Fan and battery charging alternator power	kW	58		
Net engine power	kWm	833	1055	1166
Brake mean effective pressure (gross)	kPa	1555	1942	2136
Combustion air flow at ISO conditions	m³/min	90	103	109
Exhaust gas temperature (max) after turbo	°C	422		
Exhaust gas flow (max) at atmospheric pressure	m³/min	180		
Boost pressure ratio	-	2,39	2,87	3,10
Mechanical efficiency	%	88.1	90.3	91.1
Overall thermal efficiency (nett)	%	39,5	39,8	39,6
Friction and pumping power losses	kWm	120		
Mean piston speed	m/s	9,5		
Engine coolant flow	l/min	948		
Typical GenSet electrical output (0.8pf)	kVA	989	1253	1385
	kWe	791	1002	1108
Assumed alternator efficiency	%	95		

General installation - 4012-46TWG3A (Temperate)

Designation	Units	Type of operation and application		
		Base	Prime	Standby
Gross engine power	kWb	960	1200	1314
Fan and battery charging alternator power	kW	51		
Net engine power	kWm	909	1149	1263
Brake mean effective pressure (gross)	kPa	1675	2094	2293
Combustion air flow at ISO conditions	m³/min	94	108	114
Exhaust gas temperature (max) after turbo	°C	474		
Exhaust gas flow (max) at atmospheric pressure	m³/min	182		
Boost pressure ratio	-	2.55	3.05	3.28
Mechanical efficiency	%	88.9	90.9	91.6
Overall thermal efficiency (nett)	%	39.66	39.80	38.95
Friction and pumping power losses	kWm	120		
Mean piston speed	m/s	9,5		
Engine coolant flow	l/min	948		
Typical GenSet electrical output (0.8pf)	kVA	1079	1364	1500
	kWe	864	1092	1200
Assumed alternator efficiency	%	95		

General installation - 4012-46TWG3A (Tropical)

Designation	Units	Type of operation and application		
		Base	Prime	Standby
Gross engine power	kWb	967	1207	1321
Fan and battery charging alternator power	kW	58		
Net engine power	kWm	909	1149	1263
Brake mean effective pressure (gross)	kPa	1688	2106	2305
Combustion air flow at ISO conditions	m³/min	94	108	115
Exhaust gas temperature (max) after turbo	°C	479		
Exhaust gas flow (max) at atmospheric pressure	m³/min	182		
Boost pressure ratio	-	2.56	3.07	3.30
Mechanical efficiency	%	89.0	91.0	91.7
Overall thermal efficiency (nett)	%	39.67	39.75	38.92
Friction and pumping power losses	kWm	120		
Mean piston speed	m/s	9,5		
Engine coolant flow	l/min	948		
Typical GenSet electrical output (0.8pf)	kVA	1079	1364	1500
	kWe	864	1092	1200
Assumed alternator efficiency	%	95		

Notes:

- All quoted gross engine powers include an allowance of 1.5% for installation variance
- Not to be used for CHP design purposes (indicative figures only). Consult Perkins Engines Stafford Limited. Assumes complete combustion.

Rating definitions

Baseload power

Unlimited hours usage with an average load factor of 100% of the published baseload power rating.

Prime Power

Variable load. Unlimited hours usage with an average load factor of 80% of the published prime power rating over each 24 hr. period A 10% overload is available for 1 hour in every 12 hour of operation.

Standby power

Variable load. Limited to 500 hours annual usage up to 300 hours of which may be continuous running. No overload is permitted.

Energy balance

4012-46TWG2A - Temperate

Designation	Units	Baseload power	Prime power	Standby power
Energy in fuel	kWt	2107	2632	2939
Energy in power output (gross)	kWb	884	1106	1217
Energy to cooling fan	kWm	51		
Energy in power output (nett)	kWm	833	1055	1166
Energy to exhaust	kWt	684	878	1001
Energy to coolant and oil	kWt	345	372	401
Energy to radiation	kWt	64	81	89
Energy to charge cooler	kWt	131	195	232

4012-46TWG2A - Tropical

Designation	Units	Baseload power	Prime power	Standby power
Energy in fuel	kWt	2123	2650	2960
Energy in power output (gross)	kWb	891	1113	1224
Energy to cooling fan	kWm	58		
Energy in power output (nett)	kWm	833	1055	1166
Energy to exhaust	kWt	689	886	1009
Energy to coolant and oil	kWt	345	374	403
Energy to radiation	kWt	65	81	89
Energy to charge cooler	kWt	133	197	234

4012-46TWG3A - Temperate

Designation	Units	Baseload power	Prime power	Standby power
Energy in fuel	kWt	2278	2889	3245
Energy in power output (gross)	kWb	960	1200	1314
Energy to cooling fan	kWm	51		
Energy in power output (nett)	kWm	909	1149	1263
Energy to exhaust	kWt	745	981	1128
Energy to coolant and oil	kWt	352	395	441
Energy to radiation	kWt	70	87	96
Energy to charge cooler	kWt	151	226	266

4012-46TWG3A - Tropical

Designation	Units	Baseload power	Prime power	Standby power
Energy in fuel	kWt	2294	2910	3269
Energy in power output (gross)	kWb	967	1207	1321
Energy to cooling fan	kWm	58		
Energy in power output (nett)	kWm	909	1149	1263
Energy to exhaust	kWt	751	989	1138
Energy to coolant and oil	kWt	353	398	445
Energy to radiation	kWt	70	88	96
Energy to charge cooler	kWt	153	228	269

Note: Not to be used for combined heat and power (CHP) purposes (indicative figures only), if required, please consult Perkins Engines Company Limited.

Exhaust system

Outlet size (internal) ... ... 2 x 254 mm
Outlet flange size ... ... 10” table D
Back pressure for total system ... ... 500 Pa
For recommended pipe sizes, refer to the Installation Manual.

Induction system

Emissions data with combustion air temperature of 25 °C
Maximum air intake restriction of engine:
-clean filter ... ... 200 Pa
-dirty filter ... ... 400 Pa
-air filter type ... ... Heavy Duty Axial Flow

46TWG2A Temperate - left view

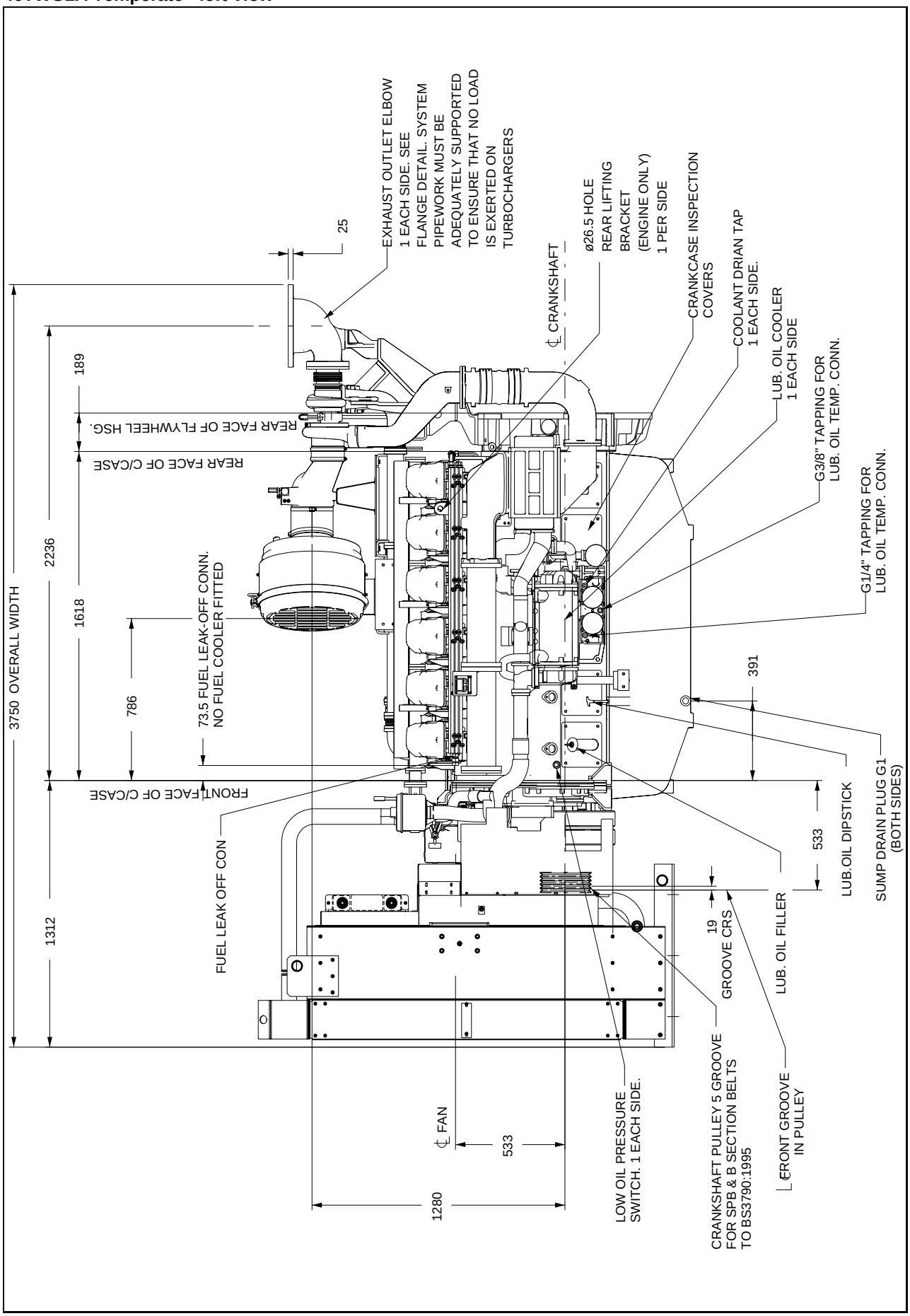

4012-46TWG2A Temperate - front view

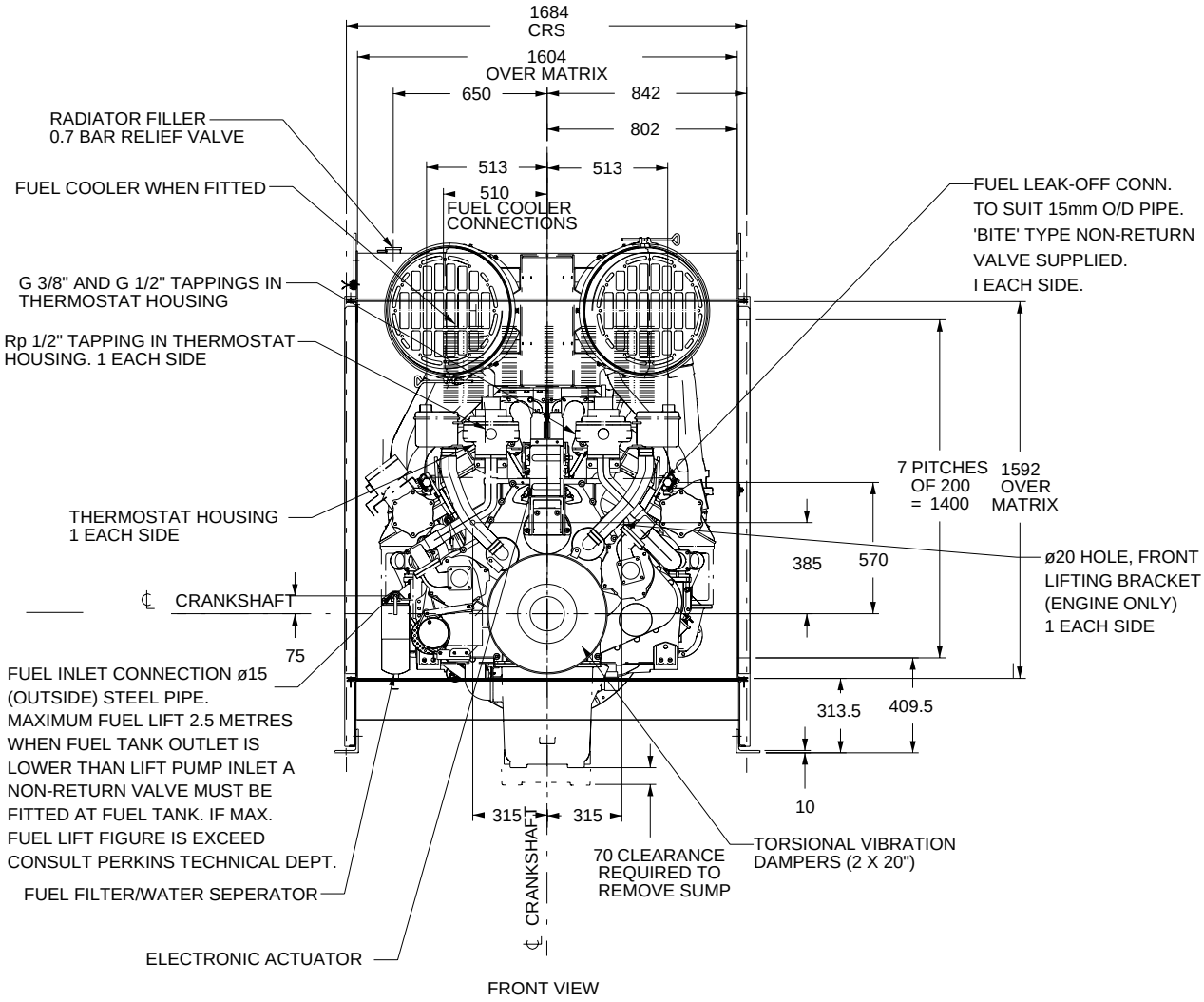

FRONT VIEW

4012-46TWG2A Temperate - right view

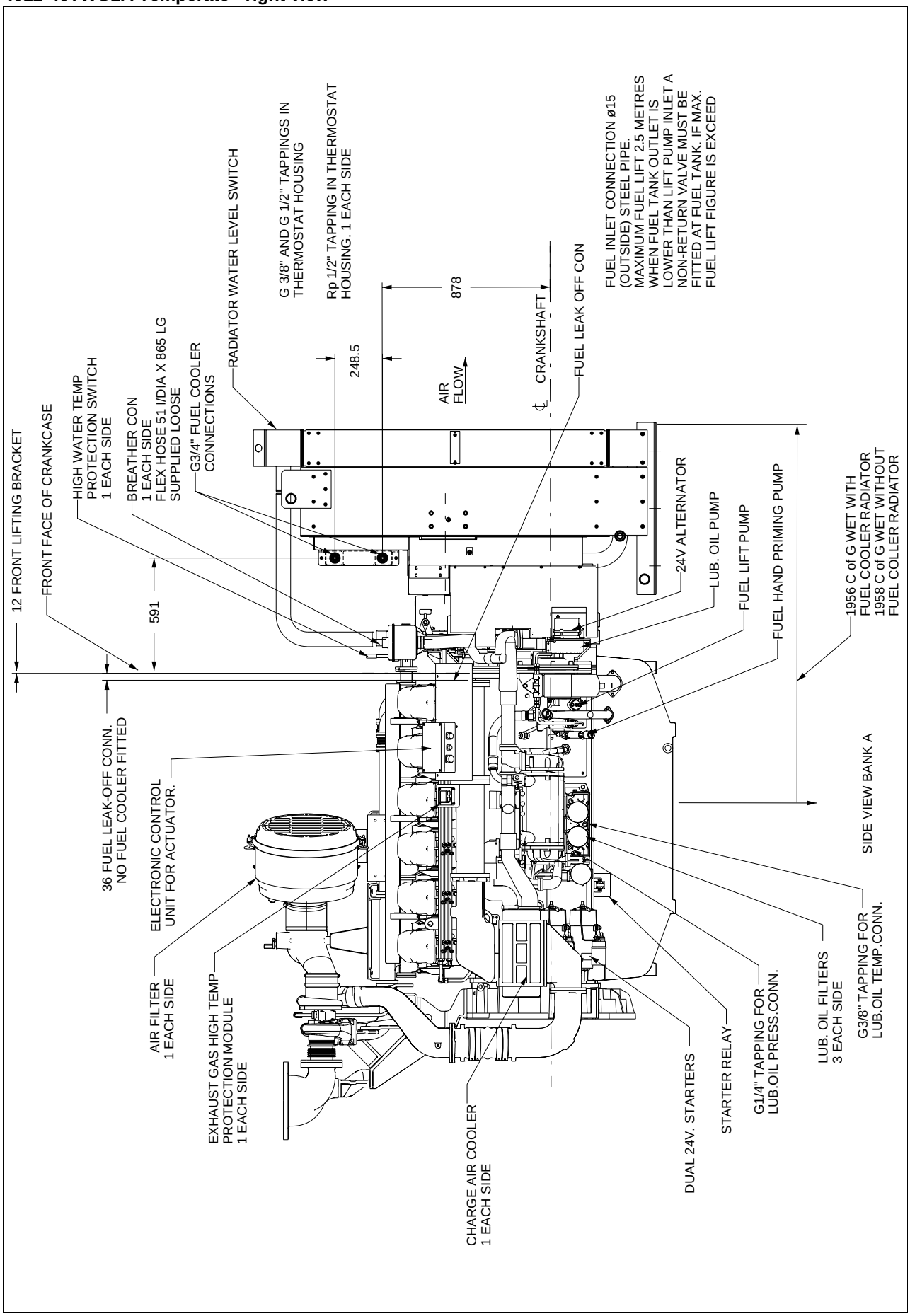

4012-46TWG2A Temperate - rear view

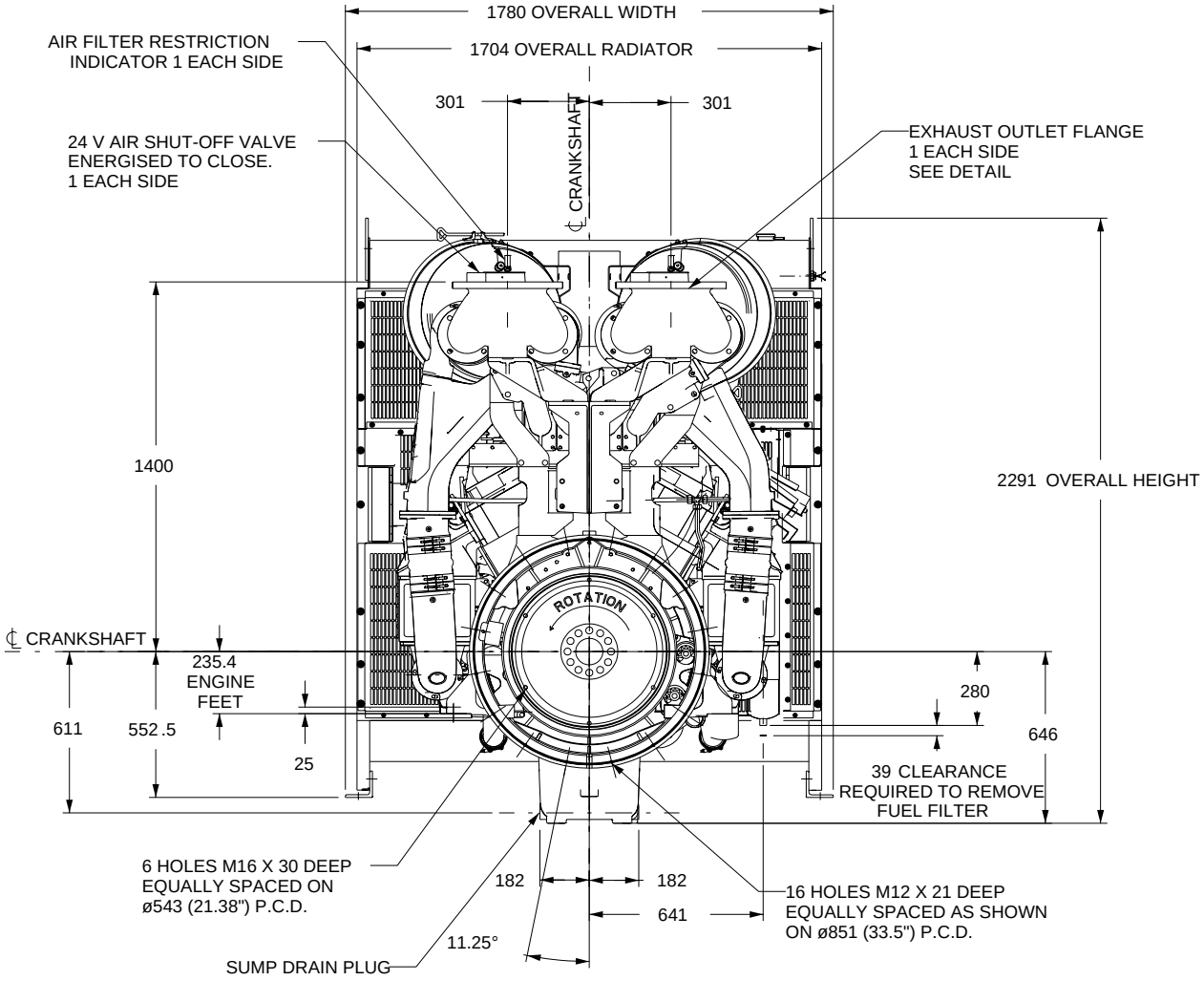

4012-46TWG2A Temperate - Support pads, exhaust outlet flange and flywheel

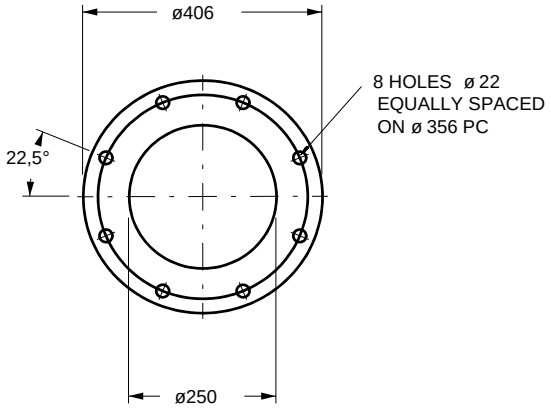

DETAIL OF EXHAUST OUTLET FLANGE
(B.S.10 TABLE D)
SCALE 1:5

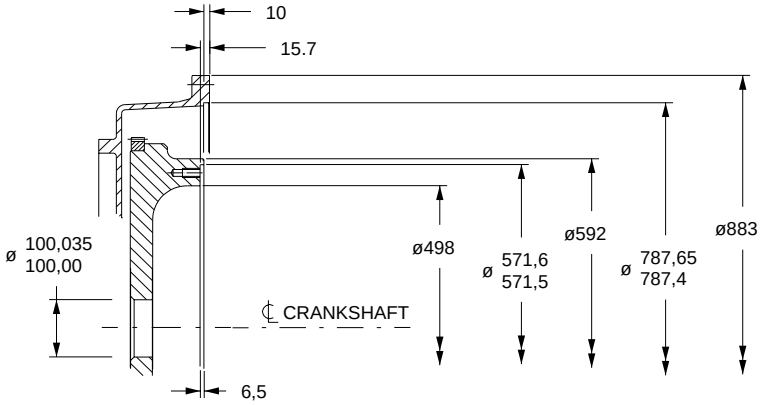

DETAIL OF SAE 518 FLYWHEEL
AND SAE 00 FLYWHEEL HOUSING
(METRIC TAPPINGS)
SCALE 1:5

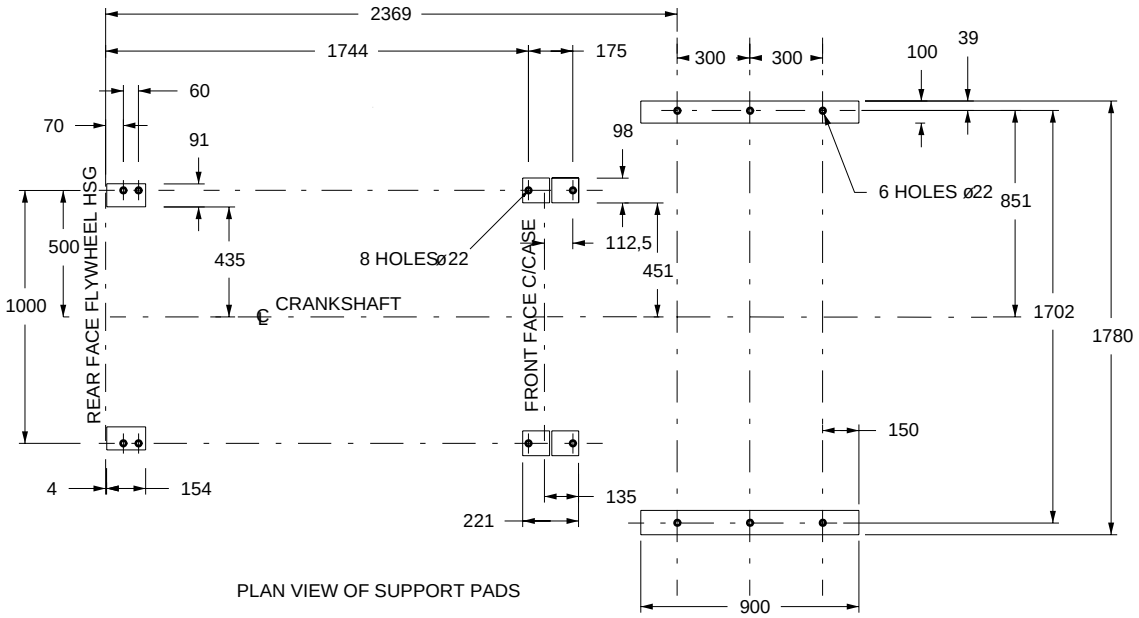

PLAN VIEW OF SUPPORT PADS

4012-46TWG2A Tropical, 4012-46TWG3A Temperate - left view

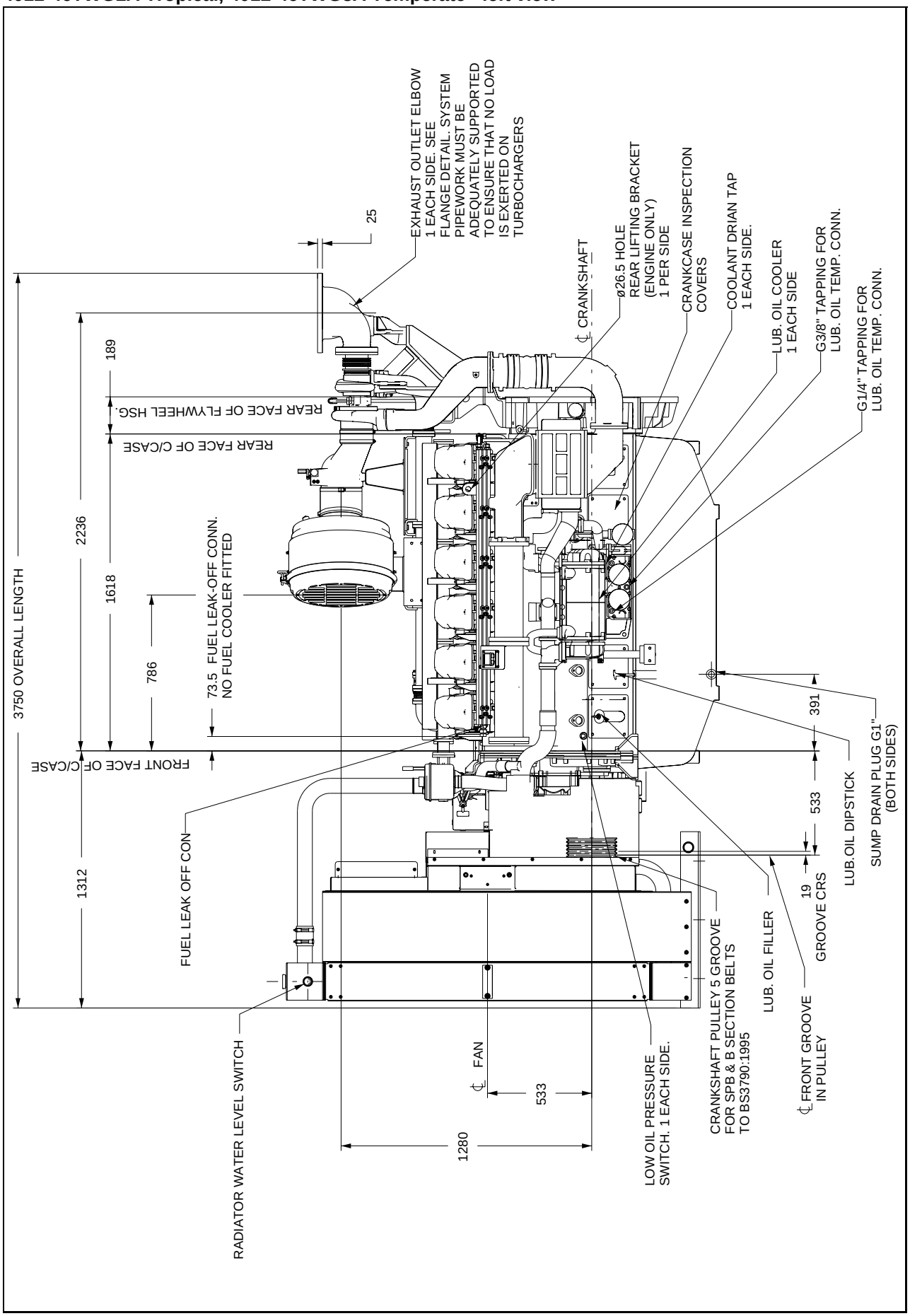

4012-46TWG2A Tropical, 4012-46TWG3A Temperate - front view

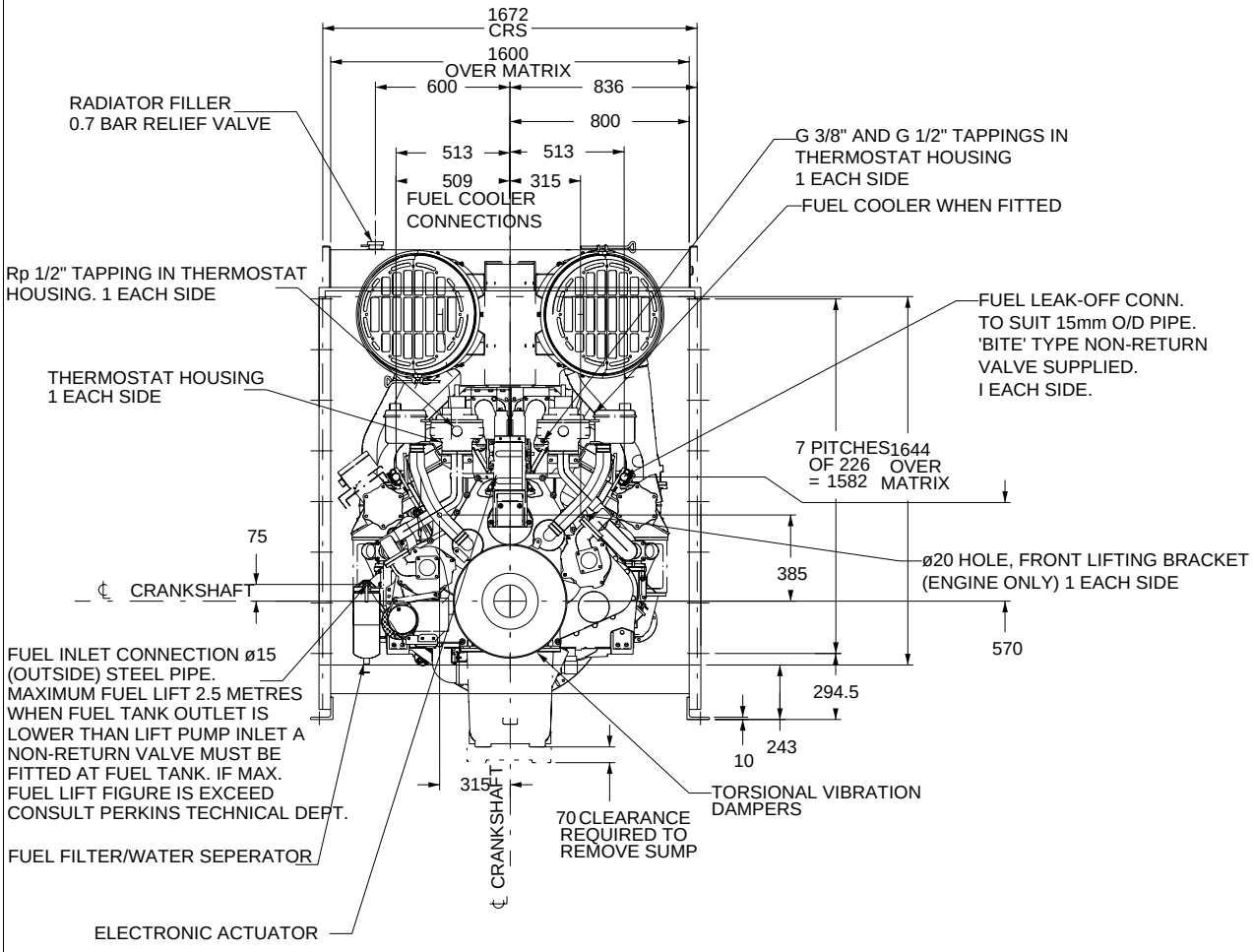

FRONT VIEW

4012-46TWG2A Tropical, 4012-46TWG3A Temperate - right view

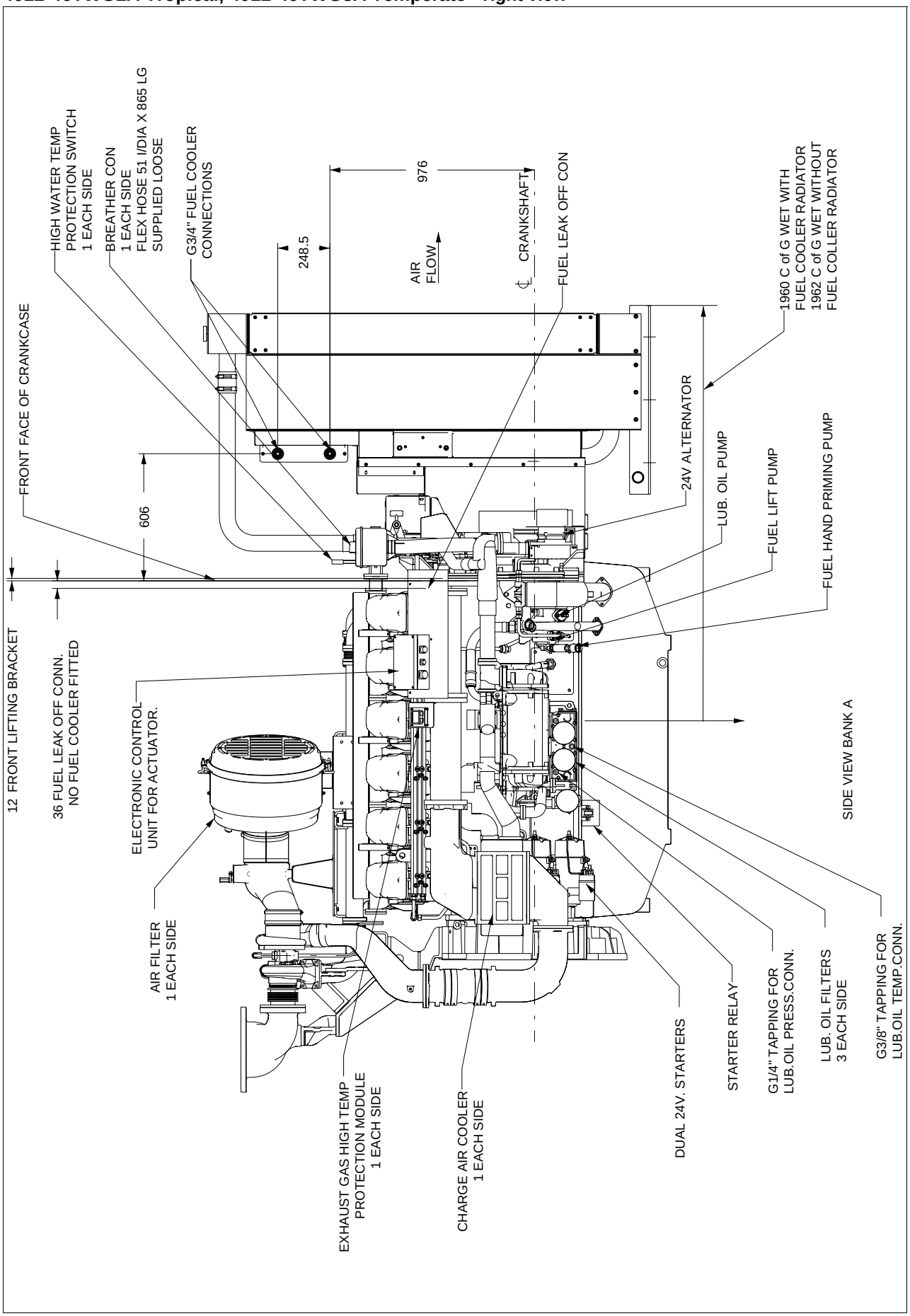

4012-46TWG2A Tropical, 4012-46TWG3A Temperate - rear view

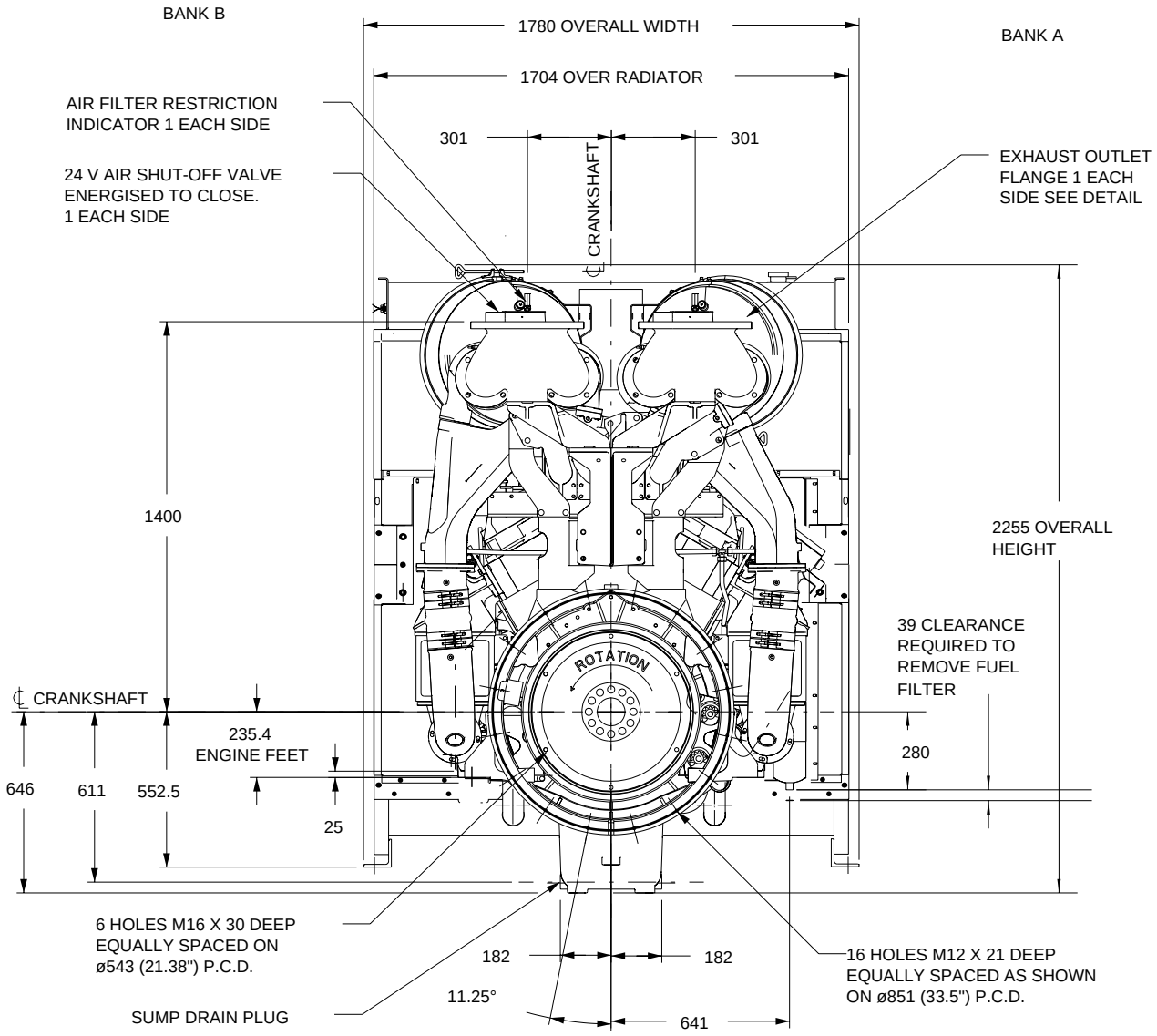

4012-46TWG2A Tropical, 4012-46TWG3A Temperate - Support pad, exhaust outlet flange and flywheel

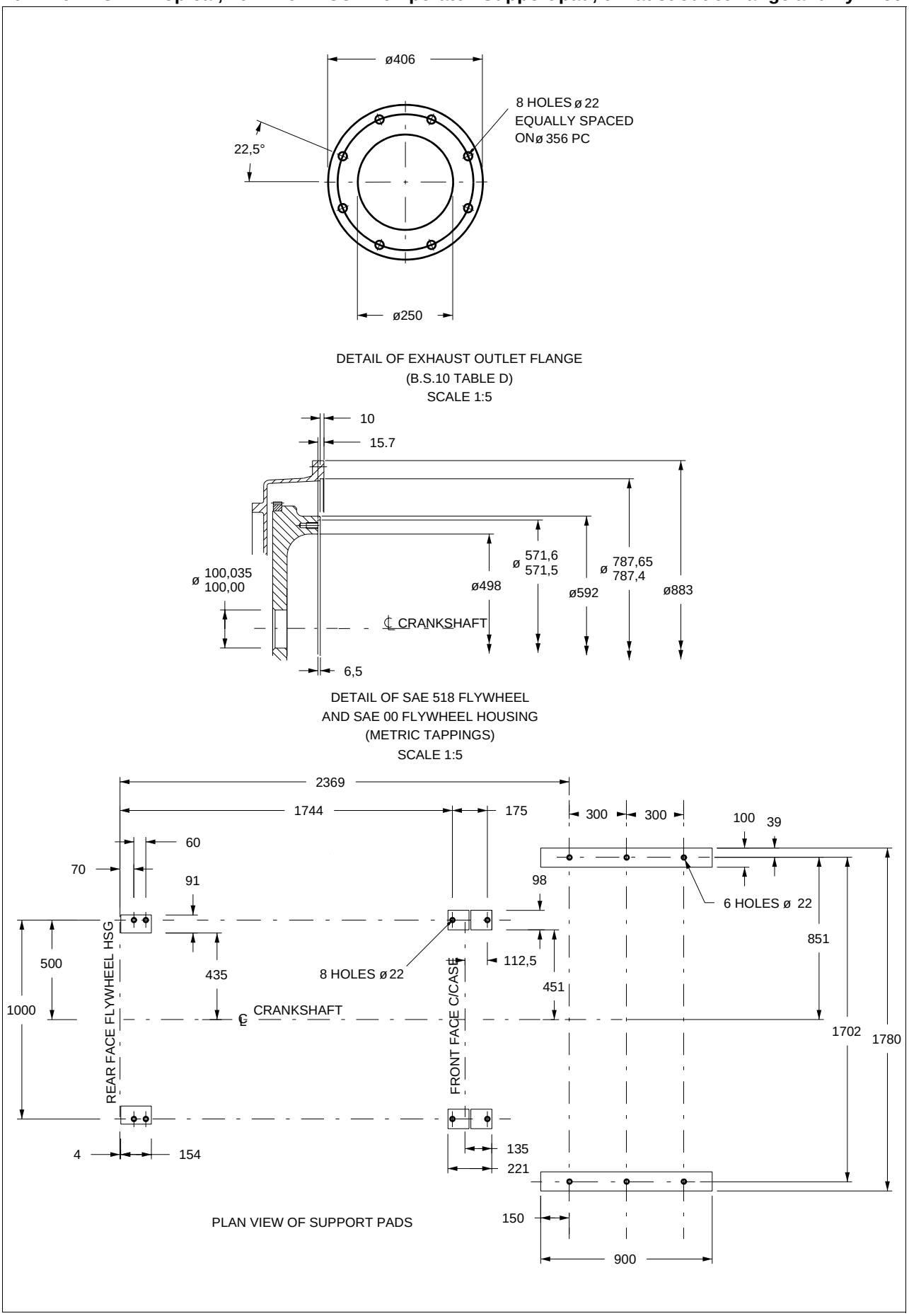

4012-46TWG3A Tropical - left view

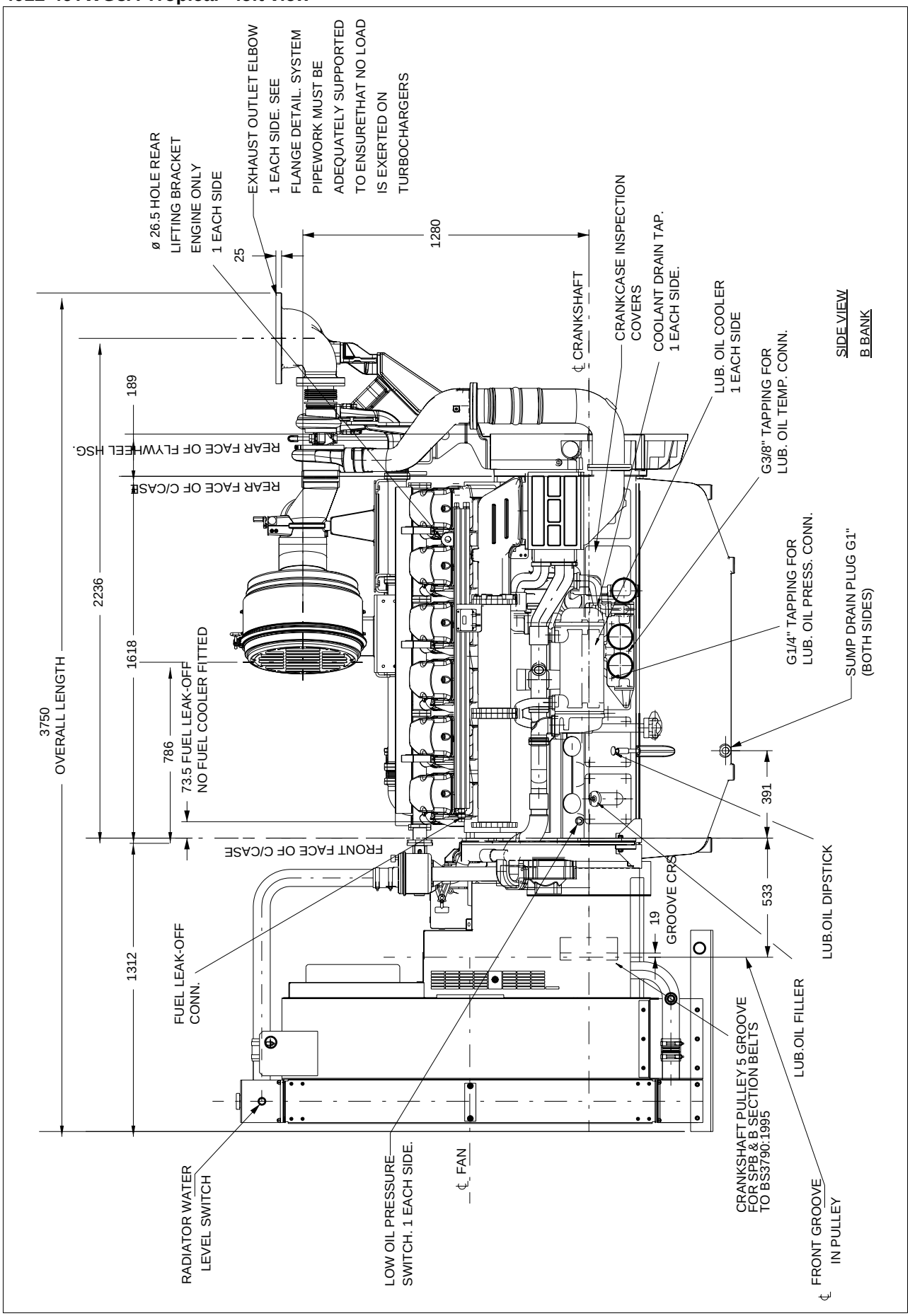

4012-46TWG3A Tropical - front view

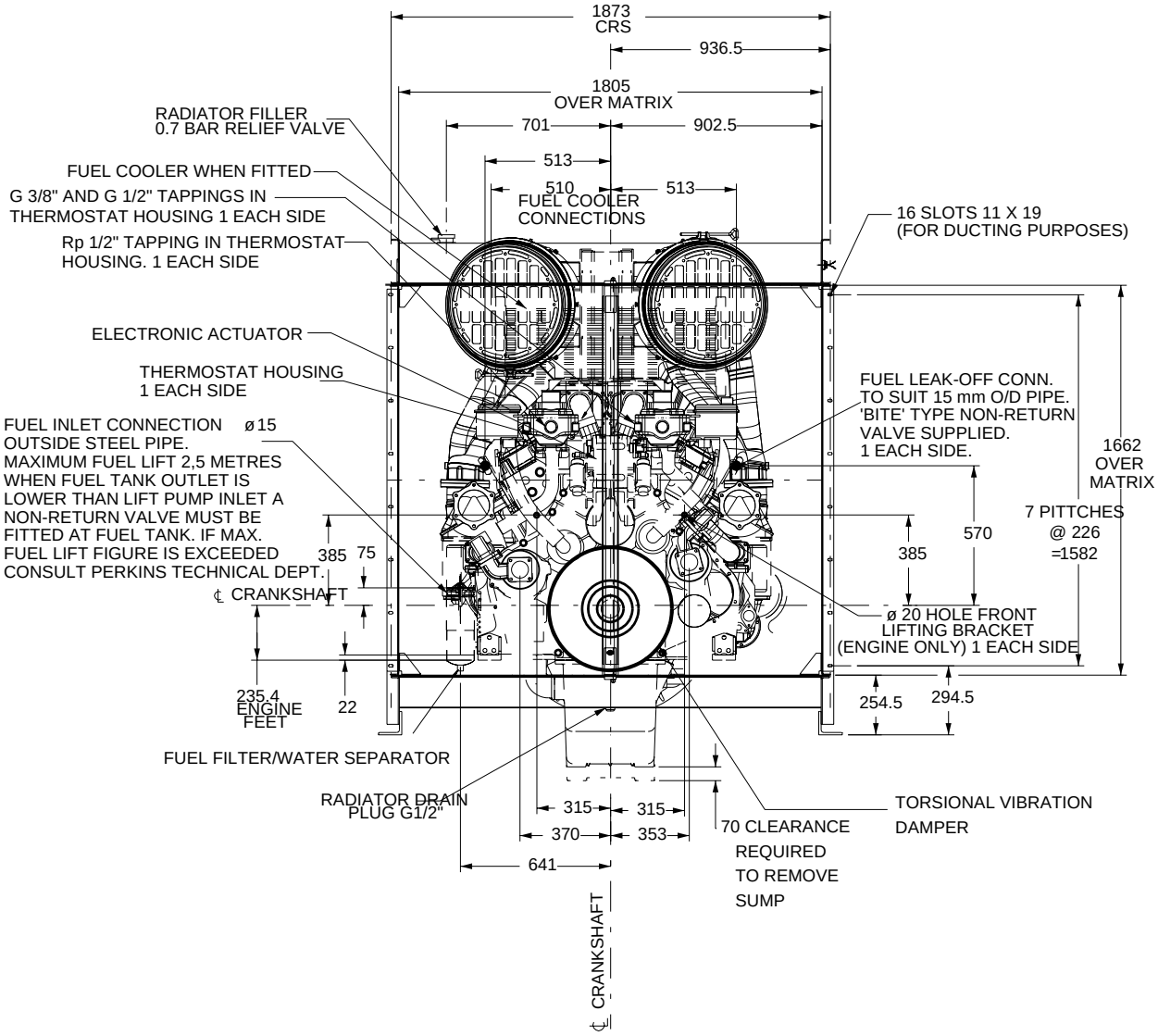

4012-46TWG3A Tropical - right view

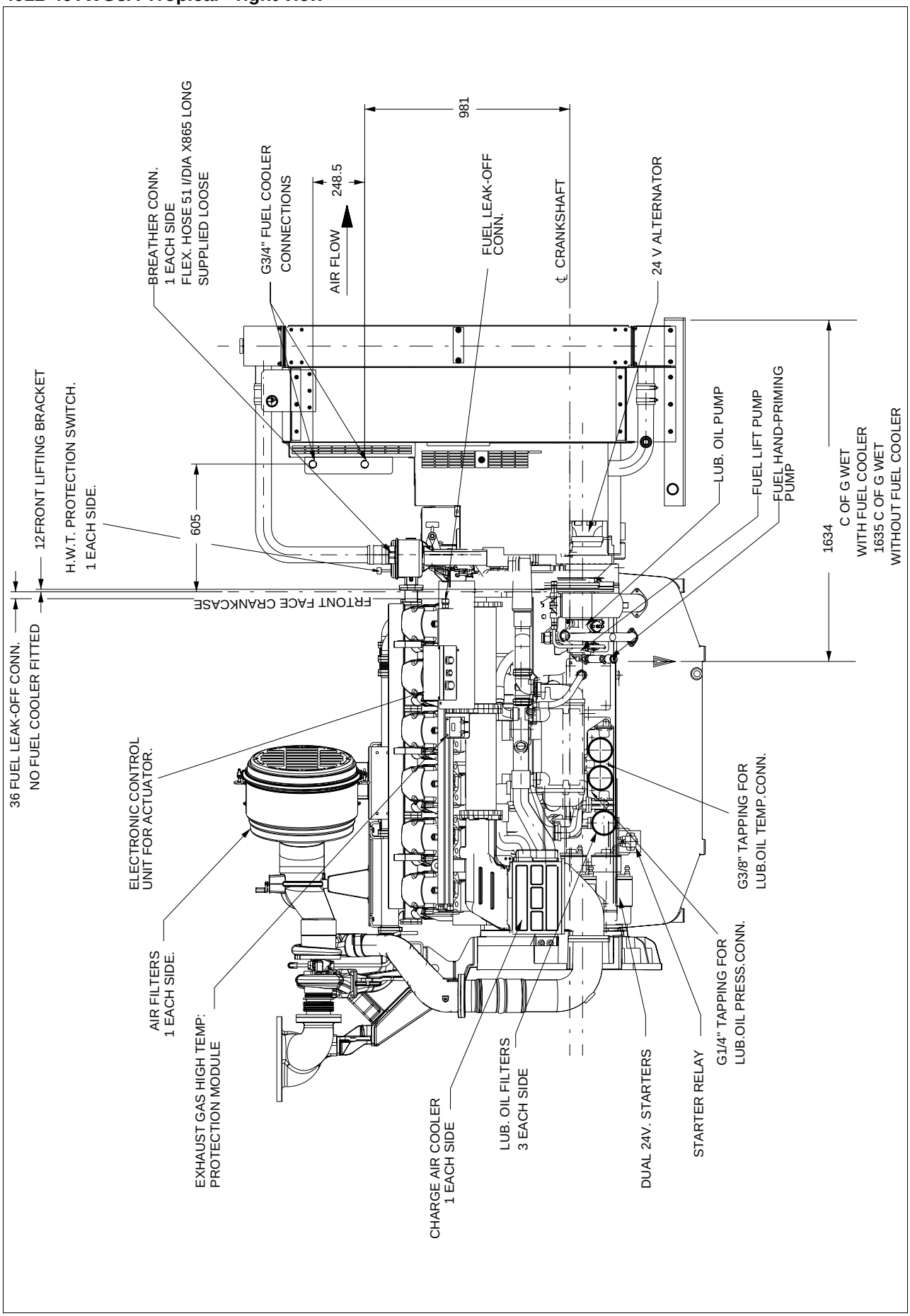

4012-46TWG3A Tropical - rear view

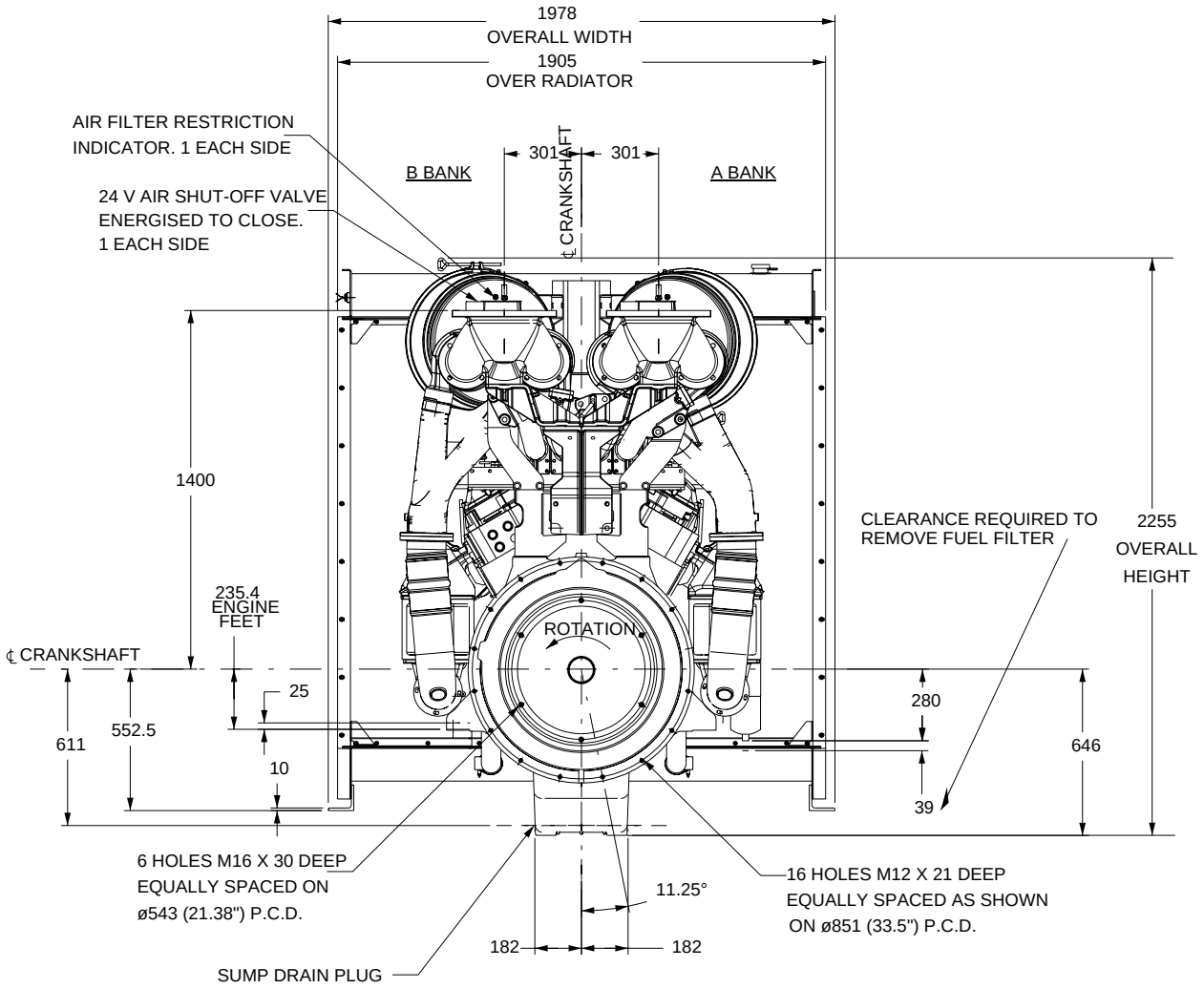

4012-46TWG3A Tropical - Support pads, exhaust outlet flange and flywheel

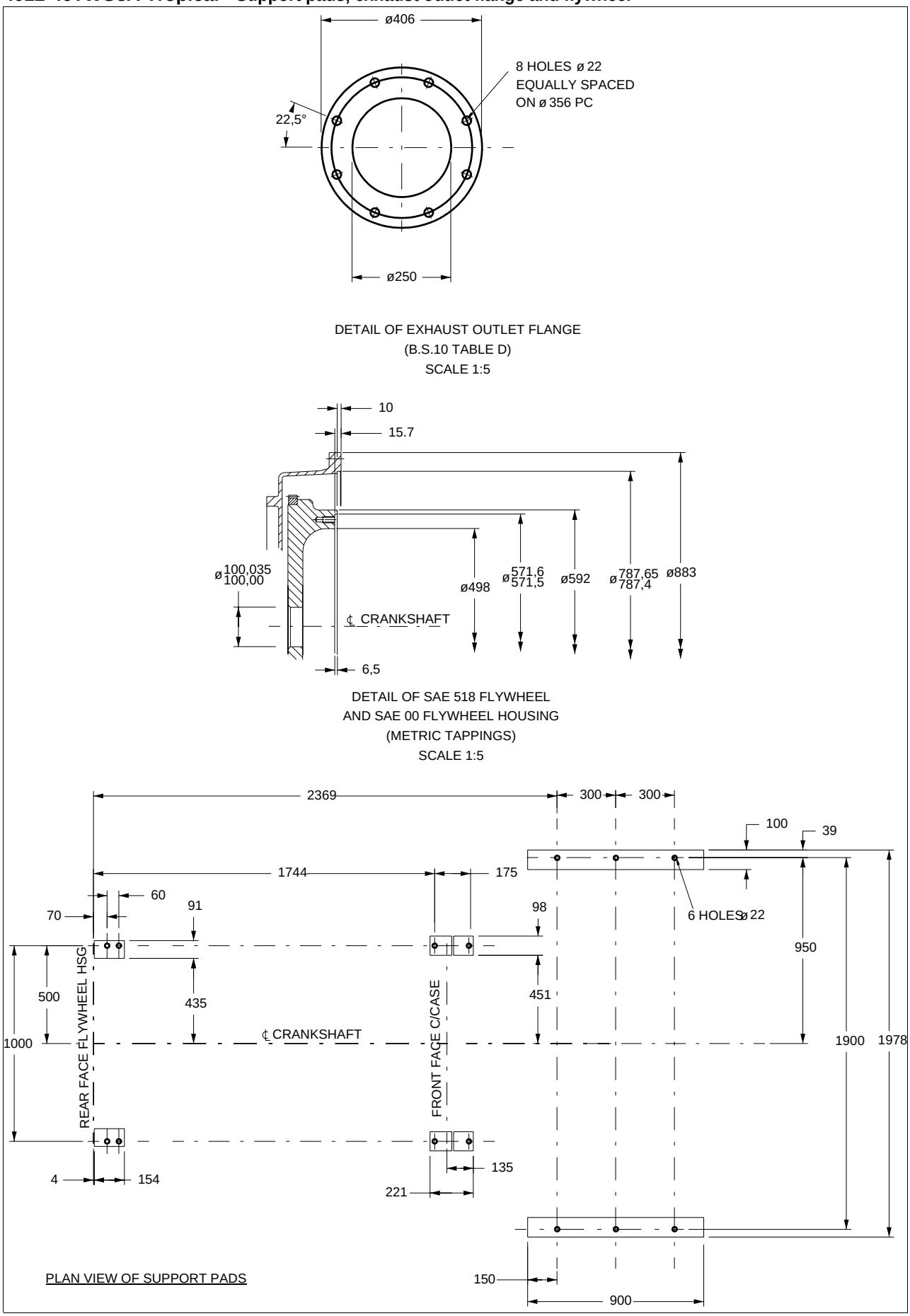

Cooling system

Recommended coolant: 50% inhibited ethylene glycol or 50% inhibited propylene glycol and 50% clean fresh water. For CHP systems and where there is no likelihood of ambient temperature below 10 °C, then clean 'soft' water may be used, treated with 1% by volume of Perkins inhibitor in the cooling system. The inhibitor is available in 1 litre bottles from all Perkins Distributors.

Maximum
-pressure in crankcase water jacket.. ... ... 170 kPa
-top tank temperature (standby) ... ... 98 °C
-static pressure on pump... ... ... 70 kPa
-pressure cap setting. 70kPa

Total coolant capacity

Electrounit (engine only) ... ... 73 litres
ElectropaK
-temperate (engine and radiator) .. ..196 litres
-tropical (engine and radiator)... ... ... 201 litres
Maximum permissible restriction to coolant pump flow. ... . 20 kPa
Thermostat operating range.. ... ... 71 - 85 °C
Temperature rise across the engine (standby power) with inhibited coolant .. .. 8 °C
Shutdown switch setting ... ... 101 °C (rising)
Coolant immersion heater capacity... ... ... 2 x 4 kW

Radiator

	Unit	Temperate	Tropical
Face area	mm²	2630400	2967420
Number of rows and material		226	226
Fins per inch and material		7	7
Width of matrix	mm	1600	1805
Height of matrix	mm	1644	1644
Weight (dry)	kg	780	843
Total coolant capacity	litres	123	128
Pressure cap setting (min)	kPa	69	69

Water jacket cooling data

	Unit	4012-46TWG2A	4012-46TWG3A
Coolant flow	l/s	948	948
Coolant exit temperature (max)	°C	98	98
Coolant inlet temperature (min)	°C	70	70
Coolant inlet temperature (max)	°C	85	85

Coolant pump

-speed ... ... 1.4 x engine rev/min
-method of drive ... ... engine (gear) driven

Fan

	Unit	Temperate	Tropical
Type		engine driven	engine driven
Diameter	mm	1400	1530
Number of blades		12	12
Material		Aluminium	Aluminium
Drive ratio		1:1	1:0,9

Cooling clearance

4012-46TWG2A - Temperate

Maximum additional restriction (duct allowance) to cooling airflow, and resultant min airflow			
Description	**°C**	**Pa**	**m³/sec**
Ambient clearance: Inhibited coolant	35	N/A	N/A
Duct allowance	35	250	N/A
Minimum airflow	35	250	22

4012-46TWG2A - Tropical

Maximum additional restriction (duct allowance) to cooling airflow, and resultant min airflow			
Description	**°C**	**Pa**	**m³/sec**
Ambient clearance: Inhibited coolant	50	N/A	N/A
Duct allowance	50	125	N/A
Minimum airflow	50	125	28

4012-46TWG3A - Temperate

Maximum additional restriction (duct allowance) to cooling airflow, and resultant min airflow			
Description	**°C**	**Pa**	**m³/sec**
Ambient clearance: Inhibited coolant	35	N/A	N/A
Duct allowance	35	250	N/A
Minimum airflow	35	250	22

4012-46TWG3A - Tropical

Maximum additional restriction (duct allowance) to cooling airflow, and resultant min airflow			
Description	**°C**	**Pa**	**m³/sec**
Ambient clearance: Inhibited coolant	50	N/A	N/A
Duct allowance	50	125	N/A
Minimum airflow	50	125	28

Cold start recommendations

Temperature range	
Down to 0 °C (32 °F)	Oil: .. .. API CH4 15W40 Starter: .. .. .2 x 24 volts Battery: .. .. 4 x 12V 286 Ah Max breakaway current: . .. . 1600 amps Cranking current: ... . 810 amps Aids: ... .block heaters Min mean cranking speed:. ... . 120 rev/min

Notes:

- The battery capacity is defined by the 20 hour rate
- The oil specification should be for the minimum ambient temperature as the oil will not be warmed by the immersion heater
- Breakaway current is dependant on battery capacity available. Cables should be capable of handling the transient current which may be up to double the steady cranking current.

Lubrication system

Recommended multigrade oil viscosity (15W40) which adequately meets the specifications of API CH4. For further details refer to the engine OMM.

Lubricating oil capacity

Total system... ... ...177 litres
Sump maximum. ... ...159 litres
Sump minimum.. ... ...136 litres
Oil temperature at normal operating conditions. ... ... 95 °C
Oil temperature (in rail) - maximum continuous operation. 105 °C

Lubricating oil pressure

minimum ... ... 340 kPa
At rated speed ... ... 400 kPa
Oil relief opens ... ... 400 kPa
Oil filter screen spacing.. ... ... 20 microns
Sump drain plug tapping size. G1
Lubricating oil pump speed ... ... 1.4 x engine rev/min
Lubricating oil pump drive method. ... ...engine driven
Shutdown switch - pressure setting (where fitted) 193 kPa (falling)

Normal operating angles

-front and rear ... ... 5°
-side tilt... ... ... 10°

Oil consumption (prime power)		4012-46TWG2A	4012-46TWG3A
After running-in (typically after 250 hours)	g/kWhr	0,52	0,52
Oil flow rate from oil pump	l/s	6,0	6,0

Fuel system

Injection system. ... ... direct injection
Fuel injection pump/Injector type ... ... Combined unit injector
Injector pressure ... ... 23,4 MPa
Fuel lift pump type.. ... ... Gerotor
Delivery flow... ... ... 1020 litres/hr
Heat retained in fuel to tank
-4012-46TWG2A ... ... 8,5 kW
-4012-46TWG3A ... ... 9,0 kW
Fuel inlet temperature to be less than ... ... 58 °C
Delivery pressure ... ... 300 kPa
Maximum suction head at pump inlet ... ... 24,5 kPa
Maximum static pressure head.. ... ... see manual
Fuel filter spacing... ... ... 10 microns
Governing type... ... ... electronic
Governing .. .. to ISO 8528-5 2005
Torque at the governor output shaft... ... ... 1·631
Tolerance on fuel consumption.. ... ... to ISO 8528-1 1993

Fuel specification

Recommended fuel to conform to:
-BS2869 1998 class A2 or BS EN590

Fuel consumption

Note: All fuel consumption figures are based on assumed fuel density of 0.862.

4012-46TWG2A - Temperate

Designation	Fuel consumption calculated on nett rated powers	
	g/kWh	litres/hr
Standby	212	287
Prime power	211	258
Baseload power	213	206
At 75% of Prime power	214	196
At 50% of Prime power	230	141

4012-46TWG2A - Tropical

Designation	Fuel consumption calculated on nett rated powers	
	g/kWh	litres/hr
Standby	213	288
Prime power	212	259
Baseload power	214	207
At 75% of Prime power	216	196
At 50% of Prime power	233	143

4012-46TWG3A - Temperate

Designation	Fuel consumption calculated on nett rated powers	
	g/kWh	litres/hr
Standby	215	315
Prime power	211	281
Baseload power	212	224
At 75% of Prime power	212	212
At 50% of Prime power	224	149

4012-46TWG3A - Tropical

Designation	Fuel consumption calculated on nett rated powers	
	g/kWh	litres/hr
Standby	217	318
Prime power	212	283
Baseload power	213	225
At 75% of Prime power	213	213
At 50% of Prime power	226	151

Electrical system

Alternator
-type ... ... insulated return
-voltage ... ... 24 volts
-output. ... ... 40 amps
Starter
-type ... ... (axial) electric
-motor voltage. ... ... 24 volts
-motor power ... ... 16,4 kW
Number of teeth on
-flywheel.. 156
-starter motor... 12
Minimum cranking speed ... ... 120 rev/min
Starter solenoid (24V)
-pull in current @ -25 °C max.. ... ... 30 amps
-hold in current @ -25 °C max. ... ... 9 amps
Engine stop solenoid current... ... ... 1,1 amps

Engine mounting

Maximum static bending moment at rear face of block .. 1356 Nm
Maximum additional load applied to flywheel due to rotating components. ... ... 850 kg

Centre of gravity

Bare engine (wet) 4012-46TWG2A / 4012-46TWG3A
-forward of rear face of cylinder block. ... ... 658 mm
-above crankshaft centre line.. ... ... 32 mm
ElectropaK (wet) - Temperate
-forward of rear face of cylinder block. ... ... 960 mm
-above crankshaft centre line.. ... ... 32 mm
ElectropaK (wet) - Tropical
-forward of rear face of cylinder block. ... ... 1286 mm
-above crankshaft centre line.. ... ... 32 mm

Load acceptance (cold)

4012-46TWG2A (prime %) 72
4012-46TWG3A (prime %) 65
Engine block temperature (cold) ... ...45 °C
Ambient temperature . ...25 °C
Governing mode ... ... Isochronous
Alternator inertia. ... ...50 kgm²
Under frequency roll off (UFRO) point set to . ...49 Hz
UFRO rate set to ... ... 16 V/Hz
LAM on/off.. ... ...on

Notes:

- All test were conducted using an engine installed and serviced to Perkins Engine Company Limited recommendations.
- Applied load is a percentage of the generator electrical output efficiencies as published in the general installation section of this data sheet.

Noise levels

The figures for total noise levels are typical for an engine running at the standby power rating in a semi-reverberant environment and measured at a distance of one metre from the periphery of the engine (sound pressure level re: -20 x 10^{-6} pa).
Ambient noise level ... ... 70 dB(A)

Octave analysis

The following diagrams show maximum noise level.

Noise data 4012-46TWG3A, 1500 rev/min 1263 kWb with radiator 584/471FC

Position	SPL dBA
1	114.1
2	112.9
3	113.0
4	111.7
5	113.0
6	114.2

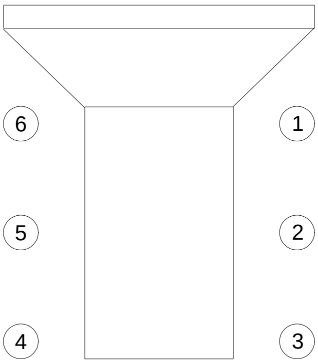

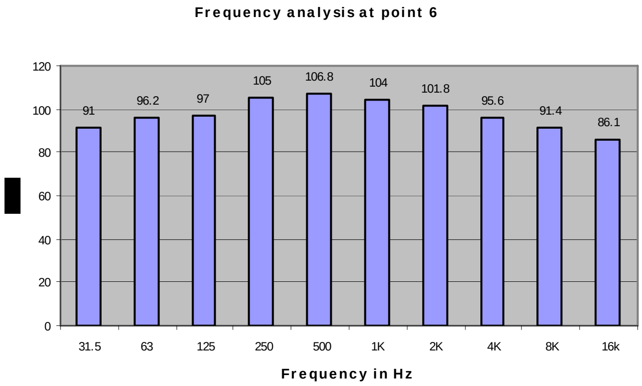

Noise data 4012-46TWG3A, 1500 rev/min 1263 kWb with radiator 584/485FC

Position	SPL dBA
1	113.5
2	113.2
3	112.0
4	111.7
5	113.1
6	112.8

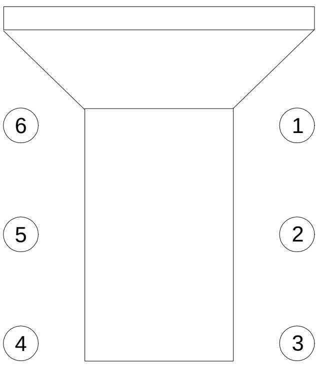

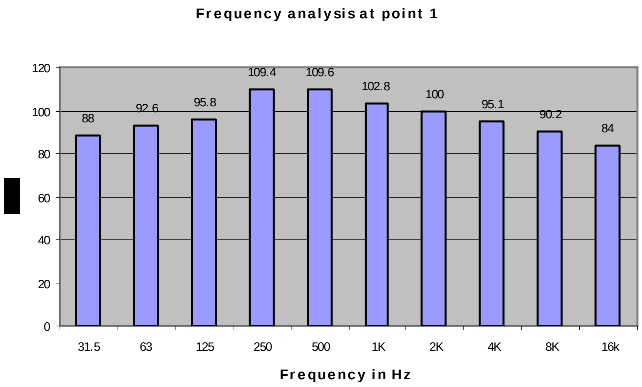

Note: The information given on this Technical Data Sheet is for standard ratings only. For ratings other than those shown, please contact Perkins Engines Company Limited.

@Perkins®

Perkins Engines Company Limited
Peterborough PE1 5NA United Kingdom
Telephone +44 (0) 1733 583000
Fax +44 (0) 1733 582240
www.perkins.com

All information in the document is substantially correct at the time of printing but may be subsequently altered by the company.

Distributed by

Publication No. TPD1603E, Issue 1. © Perkins Engines Company Limited.

FRAME 8224H WINDING 6S

MODELS **LL8224H / LL8234H**

REF: F8204HW6S-2 JULY 2010

WINDING DETAILS

Code	6S	Insulation class	H
Phase	3	Leads	6
Pole number	4	Pitch	2/3

MECHANICAL DETAILS

Standard protection		IP23
Overspeed	rpm	2250
Air flow 50Hz/60Hz	m^3/s	1.80 / 2.20

EXCITATION DETAILS

Excitation system	**AREP/PMG**
AVR model	R450M
Sustained short-circuit current	300%:10s
Steady state voltage regulation	±0.5%

WAVEFORM

Line voltage on no load or balanced linear rated load

Total harmonic content THC	<3.5%
Telephone influence factor TIF (NEMA)	<50
Telephone harmonic factor THF (IEC)	<2%

LINE VOLTAGE

No overvoltage tolerance for 440V 50Hz excitation level

Frequency / speed		**50Hz / 1500rpm**				**60Hz / 1800rpm**					
Star	**V**	**380**	**400**	**415**	**440**	**380**	**400**	**416**	**440**	**460**	**480**
Delta	V	220	230	240		220	230	240			

RATING

Power factor 0.8, Altitude <=1000m

Class H rise BR	**125/40**	**kVA**	**1250**	**1250**	**1250**	**1155**	**1235**	**1300**	**1355**	**1435**	**1500**	**1563**
		kW	*1000*	*1000*	*1000*	*924*	*988*	*1040*	*1084*	*1148*	*1200*	*1250*
Class H rise PR	**150/40**	**kVA**	**1325**	**1325**	**1325**	**1224**	**1309**	**1378**	**1436**	**1521**	**1590**	**1657**
		kW	*1060*	*1060*	*1060*	*979*	*1047*	*1102*	*1149*	*1217*	*1272*	*1325*
Class H rise PR	**163/27**	**kVA**	**1375**	**1375**	**1375**	**1271**	**1359**	**1430**	**1491**	**1579**	**1650**	**1719**
		kW	*1100*	*1100*	*1100*	*1016*	*1087*	*1144*	*1192*	*1263*	*1320*	*1375*
Class F rise BR	**105/40**	**kVA**	**1138**	**1138**	**1138**	**1051**	**1124**	**1183**	**1233**	**1306**	**1365**	**1422**
		kW	*910*	*910*	*910*	*841*	*899*	*946*	*986*	*1045*	*1092*	*1138*

EFFICIENCIES

Power factor 0.8

110%	Class H BR	%	94.7	94.9	95.0	95.2	94.2	94.4	94.5	94.7	94.8	94.9
100%	Class H BR	%	94.9	95.1	95.2	95.3	94.4	94.6	94.7	94.9	95.0	95.1
75%	Class H BR	%	95.4	95.5	95.6	95.4	94.8	94.9	95.1	95.2	95.3	95.3
50%	Class H BR	%	95.7	95.6	95.5	95.1	94.7	94.9	95.0	95.1	95.1	95.2
25%	Class H BR	%	94.4	94.1	93.8	92.7	92.8	92.9	93.0	93.1	93.0	93.0

CHARACTERISTIC PARAMETERS

Reactance base class H BR rating

K_c	Short-circuit ratio		0.26	0.31	0.36	0.51	0.20	0.21	0.23	0.25	0.27	0.30
X_d	D-Axis synchronous reactance (unsaturated)	pu	4.25	3.84	3.56	2.93	5.04	4.79	4.61	4.37	4.18	4.00
X'_d	D-Axis transient reactance (saturated)	pu	0.29	0.27	0.25	0.20	0.35	0.33	0.32	0.30	0.29	0.28
X''_d	D-Axis sub-transient reactance (saturated)	pu	0.164	0.148	0.138	0.113	0.195	0.185	0.179	0.169	0.162	0.155
X_q	Q-Axis synchronous reactance (unsaturated)	pu	2.55	2.30	2.14	1.76	3.03	2.88	2.77	2.62	2.51	2.40
X''_q	Q-Axis sub-transient reactance (saturated)	pu	0.192	0.173	0.161	0.132	0.228	0.216	0.209	0.197	0.189	0.181
X_2	Negative-sequence reactance (saturated)	pu	0.178	0.161	0.150	0.123	0.211	0.201	0.194	0.183	0.175	0.168
X_0	Zero-sequence reactance (independent)	pu	0.040	0.036	0.034	0.028	0.047	0.045	0.043	0.041	0.039	0.038
T'_d	D-Axis transient time constant	ms	180				180					
T''_d	D-Axis sub-transient time constant	ms	18				18					
T'_{do}	D-Axis open-circuit time constant	ms	2584				2584					
T_a	Armature time constant	ms	27				27					
T_r	Voltage recovery time	ms	< 500				< 500					

EXCITATION VOLTAGE AND CURRENT

No load excitation voltage	V	9.2	10.3	11.6	14.2	6.9	7.4	7.8	8.6	9.4	10.3
No load excitation current	A	0.84	0.94	1.05	1.29	0.63	0.67	0.71	0.78	0.85	0.94
Class H BR excitation voltage	V	45.4	45.3	45.9	45.4	41.4	41.9	42.6	43.7	44.9	46.5
Class H BR excitation current	A	4.13	4.12	4.17	4.13	3.76	3.81	3.87	3.97	4.08	4.23

WINDING RESISTANCE

At 20°C

Stator line-to-line (series star)	Ω	0.0032	Exciter field	Ω	11.00
Main field	Ω	0.434			

According to: IEC 60034, UTE NFC51.111, VDE 0530, BS 4999/5000, NEMA MG 1-33

Values quoted are typical. In line with our policy of continuous improvement, we reserve the right to change specification without notice.

FRAME	8224H	WINDING	6S

MODELS **LL8224H / LL8234H**

REF: F8204HW6S-2 JULY 2010

LOCKED ROTOR MOTOR STARTING CURVES

Power factor 0.4

50 Hz AREP / PMG

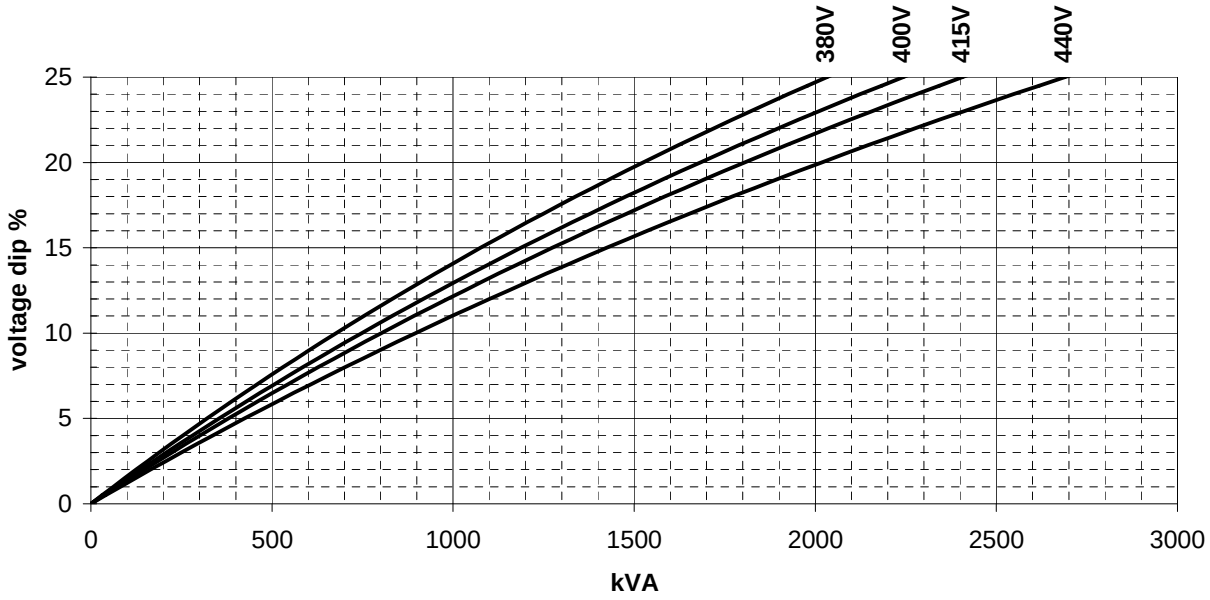

60 Hz AREP / PMG

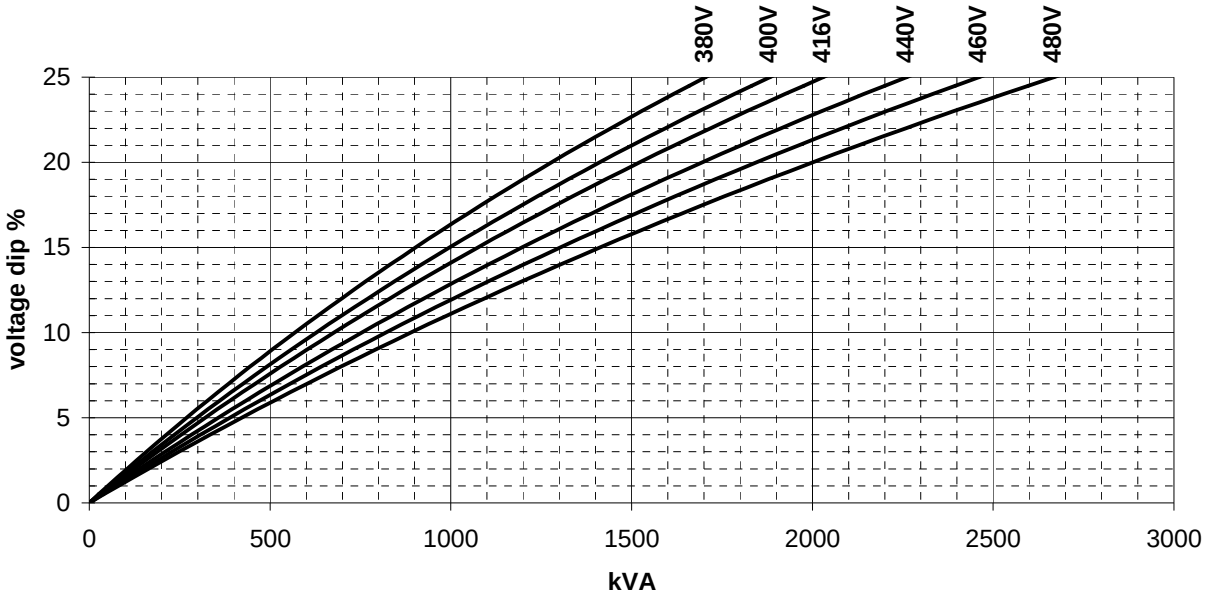

According to: IEC 60034, UTE NFC51.111, VDE 0530, BS 4999/5000, NEMA MG 1-33

Values quoted are typical. In line with our policy of continuous improvement, we reserve the right to change specification without notice.

FRAME 8224H WINDING 6S

MODELS **LL8224H / LL8234H**

REF: F8204HW6S-2 JULY 2010

THREE-PHASE SHORT-CIRCUIT DECREMENT CURVES

No-load excitation at rated speed

400V 50Hz, 480V 60Hz

Star

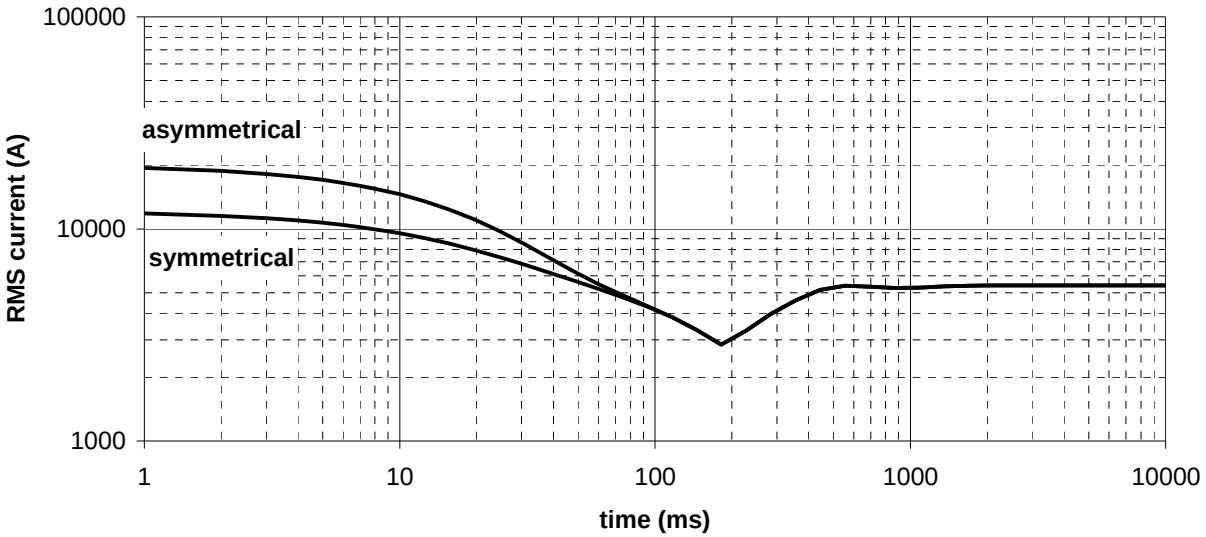

Multiplication Factors

50Hz Voltages	380	400	415	440
Multiplication Factor	0.95	1.00	1.04	1.10

Apply factor up to 2xT'd, remainder of curve unchanged

60Hz Voltages	380	400	416	440	460	480
Multiplication Factor	0.79	0.83	0.87	0.92	0.96	1.00

Apply factor up to 2xT'd, remainder of curve unchanged

Winding Connection	Star	Delta
Multiplication Factor	1.00	1.73

Apply factor to the complete curve

According to: IEC 60034, UTE NFC51.111, VDE 0530, BS 4999/5000, NEMA MG 1-33

Values quoted are typical. In line with our policy of continuous improvement, we reserve the right to change specification without notice.

InteliCompact^{NT} SPtM

Easy to use paralleling controllers

Datasheet

Product description

- Compact gen-set controller operating in parallel to mains mode or Auto Mains Failure (AMF) mode
- Meets all requirements for AMF applications
- Simple paralleling (easy wiring, installation and configuration

Order code: **IC-NT SPtM**

Key features

- Generator measurement: V, A, kW, kVAr (3 phase, true RMS), Hz, including energy counters
- Mains measurements: V (3 phase, true RMS), A (1 phase, tru RMS), Hz
- Mains and Engine protections (A, Hz, Vector Shift)
- AMF Function, Mains import/export
- High tariff avoidance, Peak shaving, Peak lopping
- Automatic synchronization and load control (via speed governor or ECU)
- Synchronization of MCB (reverse synchronization)
- AVR control (Volt and PF control)
- Wide range of communication interfaces – RS232, RS485, USB, Modbus, GSM/Analog modem, GPRS, Ethernet
- Support of electronic controlled engines (J1939, Modbus)
- Event based history with capacity for nearby 200 records.
- IC-NT CT-BIO7 extension plug-in module included

Application overview

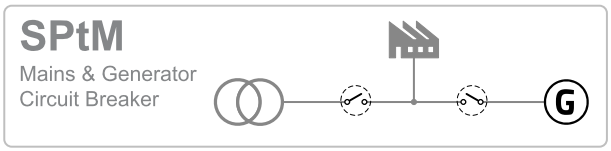

Technical data

Power supply

Power supply range	8-36 V DC
Power supply drop-out immunity	50 ms (from min. 10 V)
Power consumption	approx. 200 mA / 8 V; 50 mA / 36 V
Peak power consumption (LT)	approx. 0,56 A / 8 V; 1,8 A / 36 V
Backup battery type	CR 1225
Estimated backup battery lifetime	10 years

Operating conditions

Operating temperature	-20-70 °C
Operating temperature (LT version)	-40-70 °C
Operating humidity	95% non-condensing (IEC/EN 60068-2-30)
Protection degree (front panel)	IP65
Vibration	5-25 Hz, +/- 1,6 mm; 25-100 Hz, a = 4 g
Shocks	a_{max} 200 m/s^2
Storage temperature	-30-80 °C

Voltage measurement

Measurement inputs	3 ph generator voltage 3 ph mains voltage
Measurement type	True RMS
Voltage range	480 V Ph-Ph (277 V Ph-N)
Max. measured voltage	340 V Ph-N
Voltage accuracy	1 % from the range
Frequency range	30-70 Hz, measured from L3
Frequency accuracy	0,05 Hz

Current measurement

Measurement inputs	3ph generator current
Measurement type	True RMS
Current range	5 A
Max. measured current	9 A
Max. allowed current	12 A continuous, 50 A/1 s
Current accuracy	2 % from the range

Binary inputs

Number	9 non-isolated
Input resistance	4,2 kΩ
Common pole	Positive, V_s = 8-36 V DC
Close/Open indication	0-2 V close contact 4 V - V_s open contact

Binary outputs

Number	8 non-isolated
Operating voltage	8-36 V DC
Switching to	negative supply terminal
Max current	0,5 A (2 A per group)

Analog inputs

Number	3 non-isolated
Electrical range	0-2500 Ω
Resolution	10 bits, 4 digits
Precision	1 % from the range
Supported sensor types	Predefined: VDO 10Bar, VDO Temperature, VDO Fuel level User-defined: 10 points non-linear sensors can be defined by the user

Communication

CAN1	External modules 250 kbps, max 200 m Isolated
CAN2	Intercontroller and comm extensions 250/50 kbps, max 200/800 m Isolated

Magnetic pick-up

Voltage input range	2–70 V_{pp}
Frequency input range	4 Hz–10 kHz (min 2 V_{pp} @ 4 kHz, 6 V_{pp} @ 10 kHz)
Frequency measurement tolerance	0.2 %

D+

Excitation current	200 mA, during the engine start only
Charging fail threshold	80 % of U_{supply}

Voltage regulator output

Type	5 V TTL PWM / ± 10 VDC with IG-AVRi interface

Speed governor output

Output type	0-10 V analog or 5 V @ 500 Hz PWM, selectable by jumper. Serial resistor 10 kΩ shortable by jumper
Galvanic isolation	Not isolated

Display

Type	Built-in monochromatic
Resolution	128x64

Dimensions, terminals and mounting

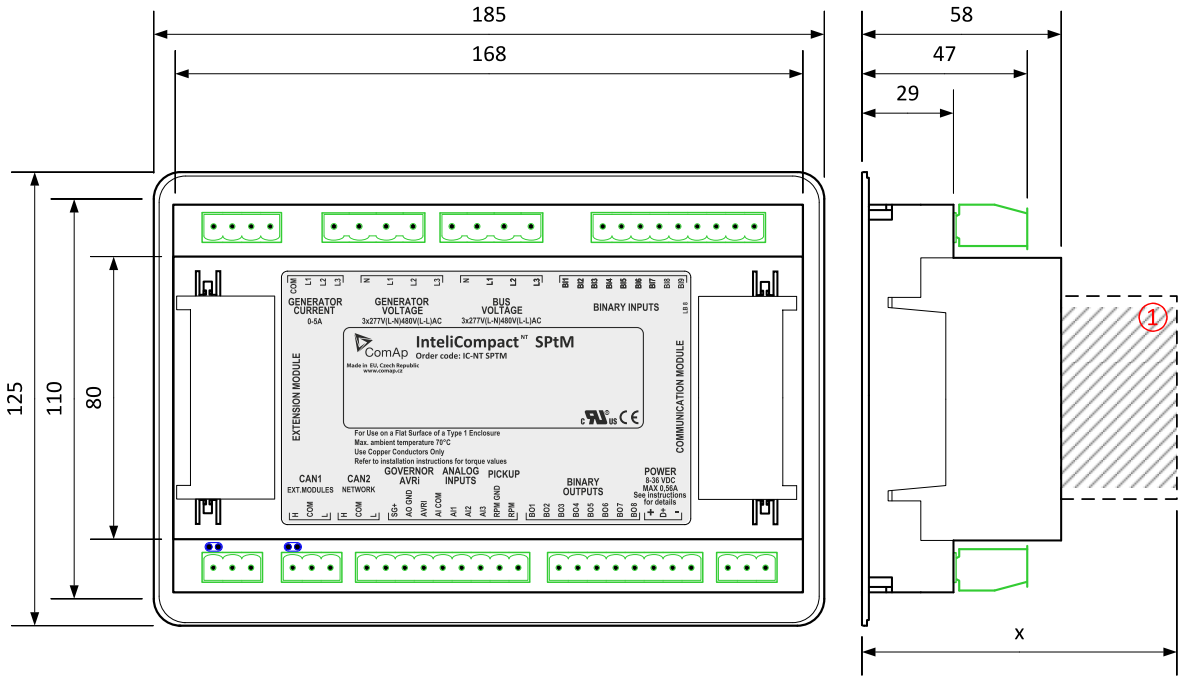

① Plug in module

Note: *Dimension x depends on plug-in module*

Panel door mounting

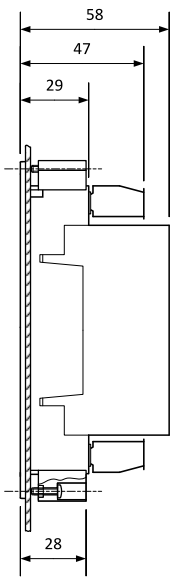

Overview of parameter x

Plug-in module	Parameter x [mm]
IL-NT-AOUT8	75
IL-NT-BIO8	74
IC-NT-CT-BIO7	76
IL-NT-RS232	113
IL-NT-RS232-485	115 @ RS232 / 74 @ RS485
IL-NT-GPRS	122
IL-NT-S-USB	128
IB-Lite	108

Note: *Parameter x includes reserve for connectors of plug-in modules.*

Note: *The controller is to be mounted onto the switchboard door. The requested cut-out size is 175x115 mm. Use the screw holders delivered with the controller to fix the controller into the door.*

Available extension modules

Product	Description	Order code
IL-NT-AOUT8	8 analog outputs packed in a unit	IL-NT-AOUT8
IL-NT-BIO8	8 binary inputs in a unit (HW switchable to 8 binary outputs)	IL-NT-BIO8
IC-NT-CT-BIO7	7 binary inputs (HW switchable to 7 binary outputs) and 1 AC current measuring input	IC-NT-CT-BIO7
IG-IOM	8 binary inputs, 8 binary outputs, 4 analog inputs and 1 analog output in a unit	IG-IOM
IGS-PTM	8 binary inputs, 8 binary outputs, 4 analog inputs and 1 analog output in a unit	IGS-PTM
IGL-RA15	15 binary LED output (3 colors) packed in a rugged metal unit	IGL-RA15
IL-NT-RS232	Communication module which provides additional RS232 interface for controller	IL-NT-RS232
IL-NT-RS232-485	Communication module which provides additional RS232 and RS485 interface for controller	IL-NT-232-485
IL-NT-GPRS	Communication module with integrated GSM modem with GPRS Internet connection	IL-NT-GPRS
I-LB+	Direct connection (PC) to all controllers on CAN2	I-LB+
InternetBridge-NT	Multiple Internet connections (PC and Modbus) to all controllers on CAN2 or RS485	IB-NT
IL-NT-S-USB	Communication module which provides additional USB interface for controller	IL-NT-S-USB
IB-Lite	Communication module which provides additional Ethernet interface for controller	IB-Lite

Related products

Product	Description	Order code
IG-AVRi	Interface between controller and generator AVR	IG-AVRi
IG-AVRi-TRANS/LV	Power supply transformer for IG-AVRi module	IG-AVRI-TRANS/LV
IC-NT RD (SW)	Remote Display Software for InteliCompact NT	IC-NT RD

Functions and protections

The described product fully supports the following functions and protections as defined by ANSI (American National Standards Institute):

Description	ANSI code	Description	ANSI code
Engine overspeed	12	Generator under/overfrequency	81H,81L
Underspeed	14	Generator overcurrent	51
Synchronism Check	25	Generator short current	50
Generator overload	32	Generator current unbalance	46
Generator reverse power	32R	Phase sequence	47
Excitation Loss	40	Earth fault	50N+64
Generator under/overvoltage	59,27	Gas (fuel) level	71
Generator voltage unbalance	47	Vector shift	78

Certificates and standards

- EN 60068-2-30
- EN 61000-6-1
- EN 61000-6-2
- EN 61000-6-3
- EN 61000-6-4
- EN 61010-1

ITEM	QTY.	AUXILLARY CONNECTORS	DIM. X	DIM.Y	DIM.Z
A	1	RAD. DRAIN OUTLET 3/4" BSP RHS	235	1702	100
B	1	RAD. DRAIN OUTLET 3/4" BSP RHS	435	1702	100
C	1	FUEL SUPPLY 3/4" BSP RHS	1647	1590	280
D	1	FUEL RETURN 3/4" BSP RHS	1797	1590	280
E	1	OIL DRAIN OUTLET 1" BSP RHS	1647	1590	125
F	1	DRIP TRAY OUTLET 3/4" BSP LHS	3054	321	51
G	1	DRIP TRAY OUTLET 3/4" BSP RHS	3054	1590	51

WEIGHT (kg) WITH LL8224H ALTERNATOR		
(DRY)	(WITH OIL)	(WITH OIL & WATER)
8734	8884	9080

WEIGHT (kg) WITH LL8224H AND SMB		
(DRY)	(WITH OIL)	(WITH OIL & WATER)
8934	9084	9280

WEIGHT (kg) WITH LL8224L ALTERNATOR		
(DRY)	(WITH OIL)	(WITH OIL & WATER)
9097	9247	9448

WEIGHT (kg) WITH LL8224L AND SMB		
(DRY)	(WITH OIL)	(WITH OIL & WATER)
9297	9447	9648

WEIGHT (kg) WITH LL8224N ALTERNATOR		
(DRY)	(WITH OIL)	(WITH OIL & WATER)
9347	9497	9698

WEIGHT (kg) WITH LL8224N AND SMB		
(DRY)	(WITH OIL)	(WITH OIL & WATER)
9547	9697	9898

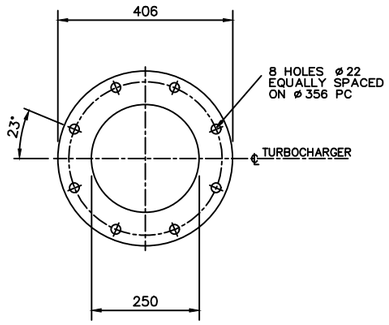

DETAIL OF EXHAUST OUTLET FLANGE
(B.S.10 TABLE D)
SCALE 1:5

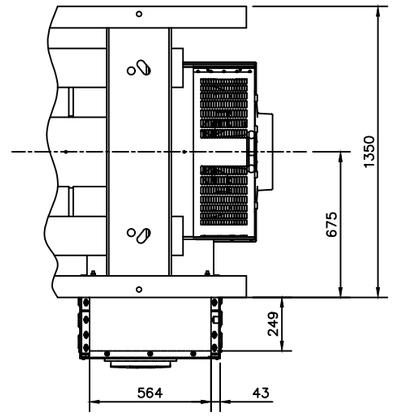

VIEW A–A
GLAND PLATE DETAILS FOR
OPTIONAL SET MOUNTED BREAKER

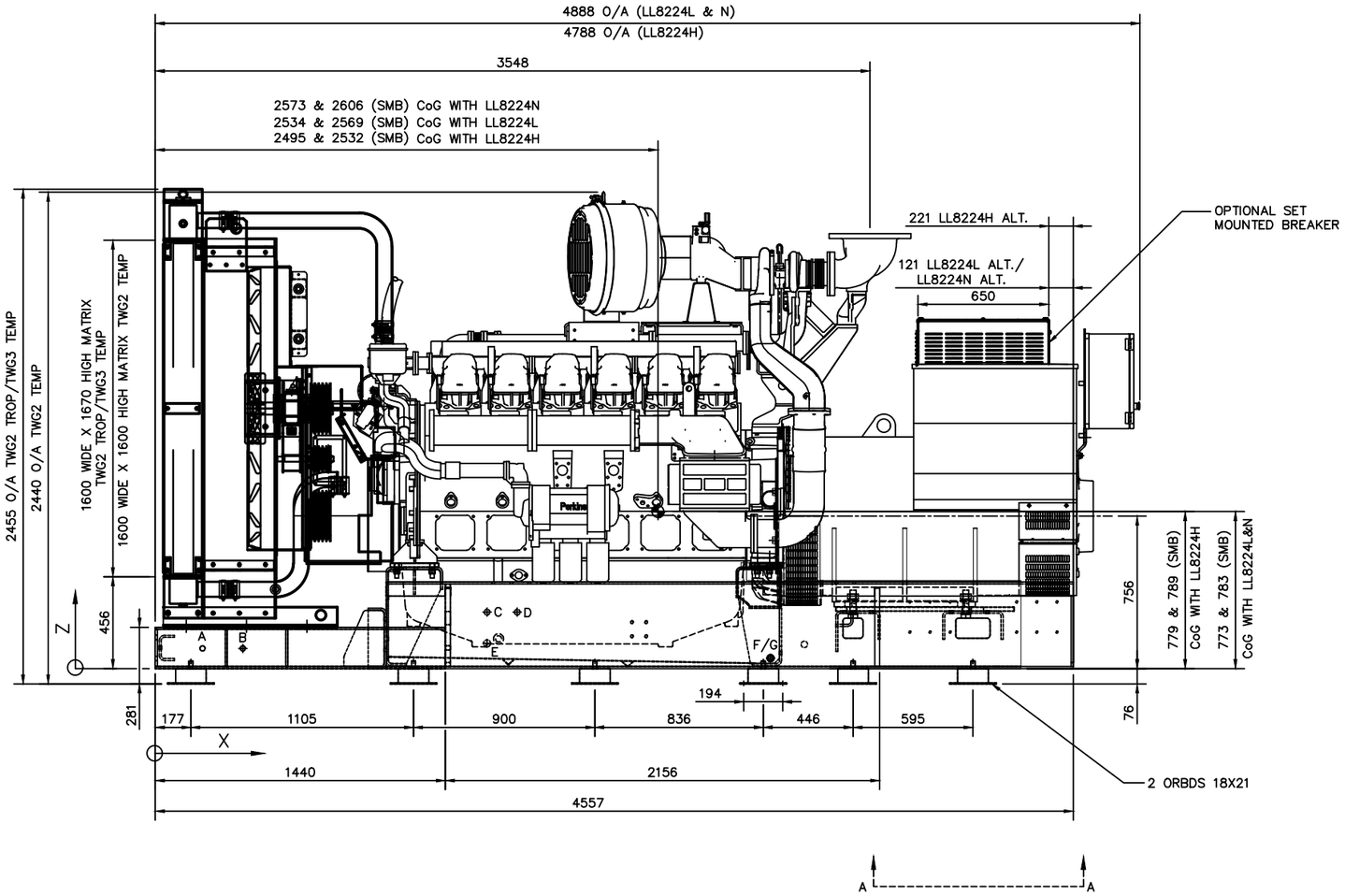

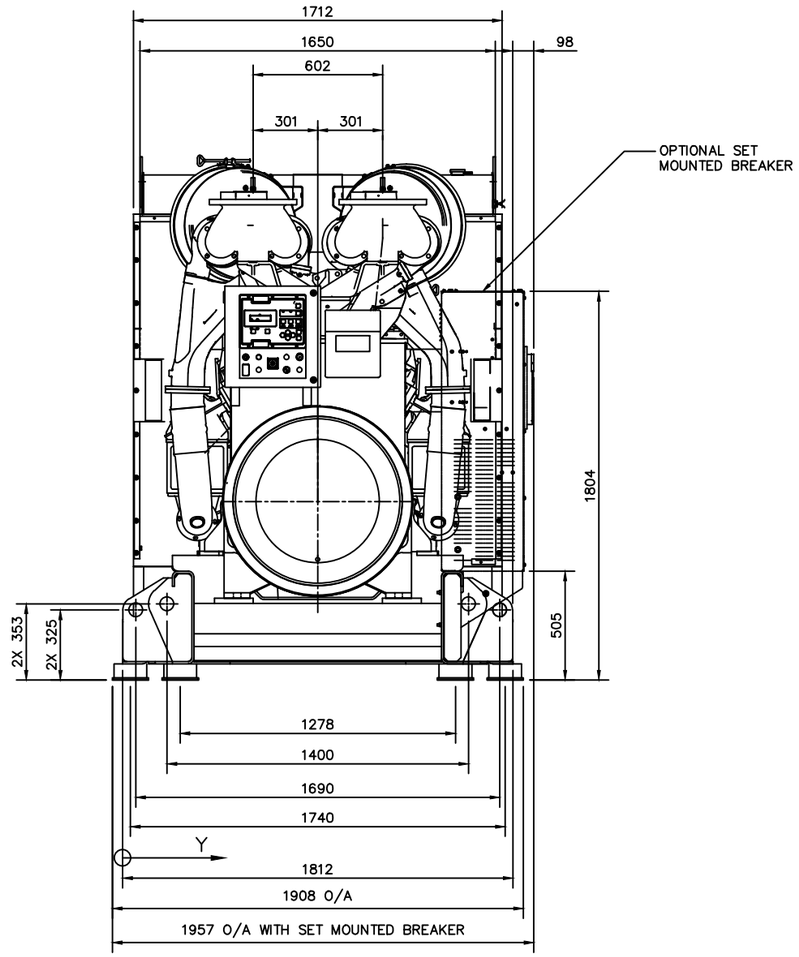

ISSUE	DESCRIPTION	ECR/DCR	BY	DATE
F	ENGINE/ALT GP & PANEL UPFIT GP UPDATED. EIM REMOVED	33623	J.C.	14/11/12
E	AVM POSITIONS AND PANEL LOCATION CORRECTED	34949	J.C.	22/09/11
D	WEIGHTS UPDATED AND CoG DIMENSIONS ADDED	31387	I.B.	20/01/10
C	RADIATOR GROUP UPDATED / EXHAUST OUTLET FIXED	28891	M.P.	11/02/08
B	WEIGHTS ADDED / RADIATOR GROUPS MODIFIED	27130	M.P.	15/05/07
A	FIRST ISSUE	–	–	

K	OPTIONAL SET MOUNTED BREAKER DETAILS ADDED	1051033	A.S.	18/12/17
J	OVERALL DIM., WEIGHT UPDATED AND BOM REMOVED	41414	A.S.	25/06/14
H	GA REVISED TO REFLECT CHANGES TO BASEFRAME	40196	A.S.	30/09/13
G	G.A. UPDATED TO SHOW BASEFRAME CHANGE	38290	A.M.	04/07/13

TOLERANCES EXCEPT WHERE OTHERWISE STATED
0 – 500mm ± 1mm
500 – 2000mm ± 2mm
OVER 2000mm ± 3mm
STRUCTURAL ± 3mm
ANGULAR ± 1°

DO NOT SCALE

THIS DRAWING IS COPYRIGHTED AND MAY BE COPIED ONLY FOR THE PURPOSES OF MAINTAINING THE PURCHASED EQUIPMENT BY THE PURCHASER

ALL DIMENSIONS IN MILLIMETRES UNLESS OTHERWISE STATED

3rd ANGLE PROJECTION

DRN. BY D.MARMION
DATE 25/10/06
APPD. BY
DATE

TITLE
G.A. OF 4012TWG2A TEMP.& TROP./ TWG3A TEMP.
OPEN SKIDBASE GENSET – WITH LL8224 ALT.

SHEET SIZE	ORIGINAL SCALE	DRAWING NO.	ISSUE
A1	1:15	MGA7185	K

UNB/A1/A1/01

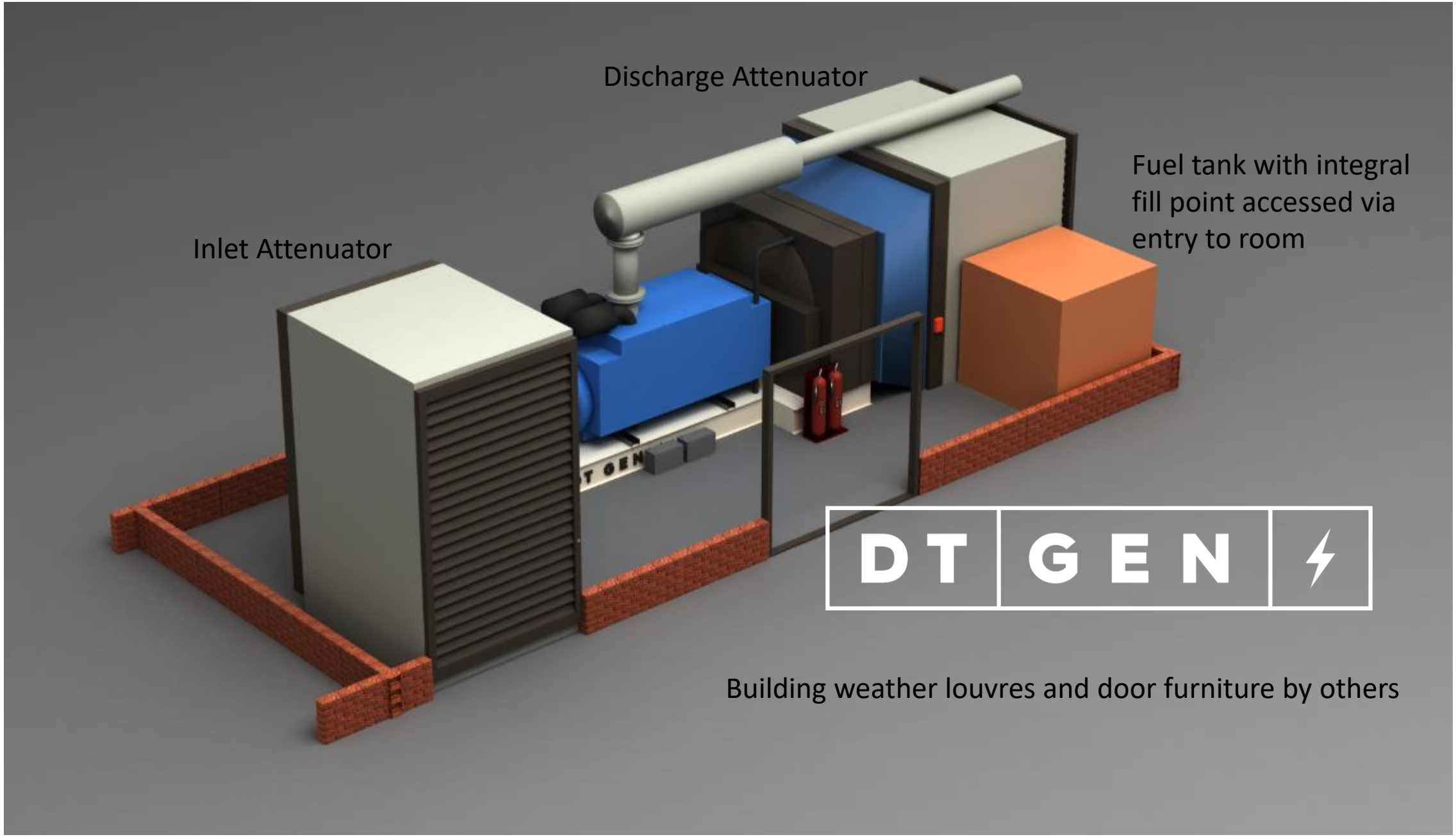
Discharge Attenuator
Fuel tank with integral fill point accessed via entry to room
Inlet Attenuator
DT GEN
Building weather louvres and door furniture by others

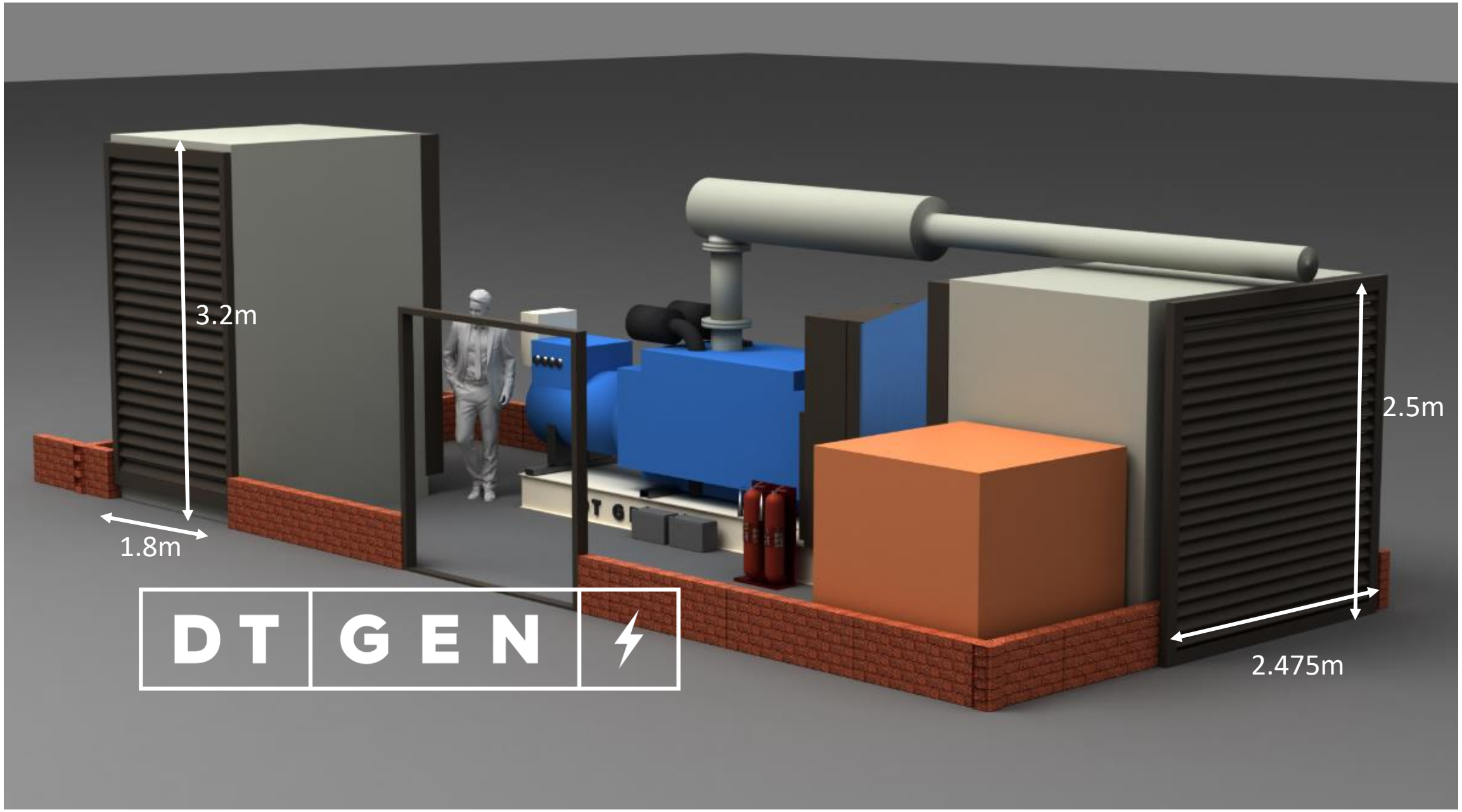
3.2m
1.8m
2.5m
2.475m
DT GEN