TECHNICAL SUBMITTAL

Project: Fourways House, Manchester

Project No: F3-24-007

LV Distribution Board Upgrade

Document Ref: TS-009

Issue Date: 9.4.24

Revision: 1

TECHNICAL SUBMITTAL

Doc Ref;	Equipment;	Revision No:	Date of Issue;	Response Req'd By;
TS-009	LV Distribution Board Upgrades	1	9.4.24	9.4.24

Attached Documents;

- _media_productattachments_files_f_u_fusebox-tpn-brochure

Distribution;

Client | Principal Contractor | Consultant

Comments;

As highlighted within the data sheet.

Status / Approval;

A		B		C	
Approved		**Approved Subject to Comments**		**Rejected**	

Signature B Lester

Print B Lester

Date: 9.4.24

Company: Cubic Works

IF THIS DOCUMENT IS NOT RETURNED WITHIN THE REQUIRED PERIOD SET IN THE CONTRACT DOCUMENTS, THEN THIS SUBMITTAL SHALL BE DEEMED TO BE ACCEPTED AS STATUS 'A'

FuseBox®

TPN Distribution Boards

MCB 1Pole 2Pole 3Pole

RCD 4Pole

RCBOs

Surge Protection

Making Electricians Smile!

UK CA CE Intertek | FBTPN01

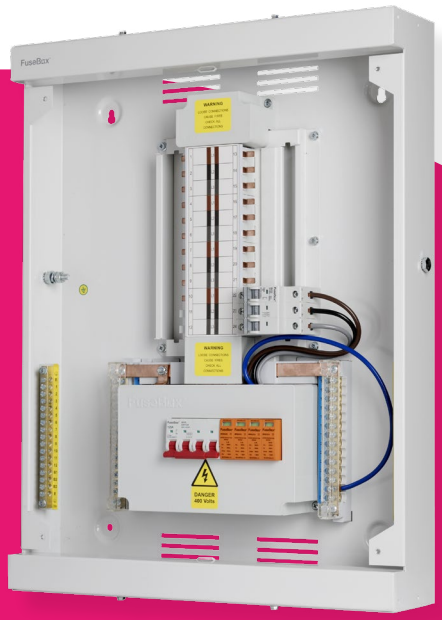

TPN07FBX INTERNAL

About **FuseBox**

The FuseBox range of 3 phase circuit protection devices and enclosures offers a practical solution for commercial, industrial, and where required domestic installations.

All enclosures are supplied with a 125A 4 pole main switch as standard and T2 factory fitted Surge Protection Device (SPD).

Robust 1.2mm galvanised steel enclosure to ensure a long life in the harshest of environments, finished in RAL 9001 epoxy powder coating.

Fully shrouded neutral terminals and incoming devices from 3 to 15 usable ways when a T2 SPD protected distribution board is selected (TPN**FBX).

TPN boards will accept FuseBox 6kA devices without any modification or additional hardware.

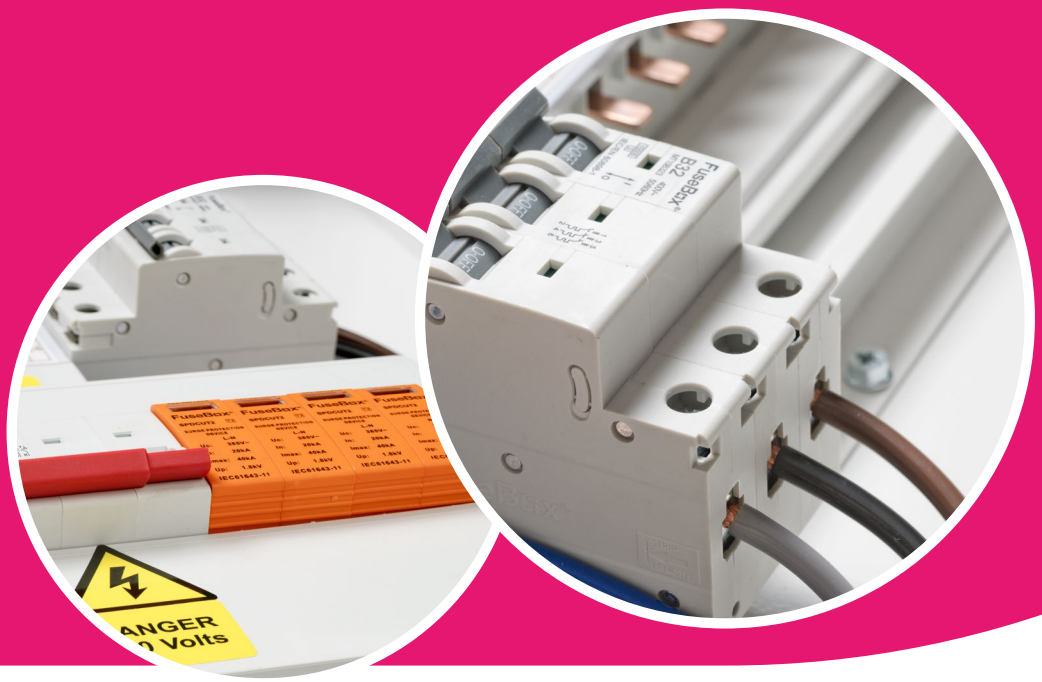

About

Design **Features**

FuseBox®

Extension box TPNEBFB
Can be positioned top or bottom

Robust pan assembly with device end stops

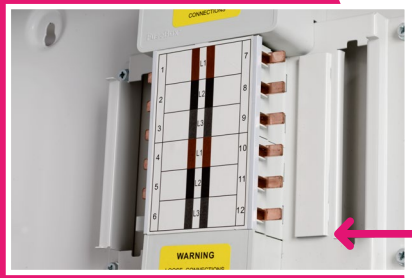

Coin slot door lock

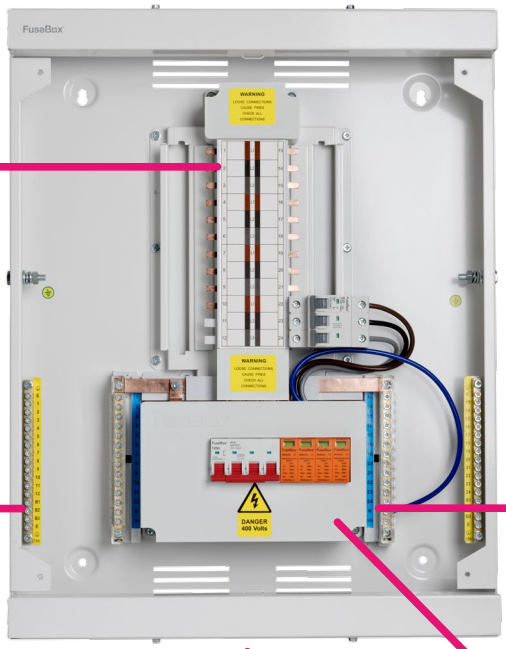

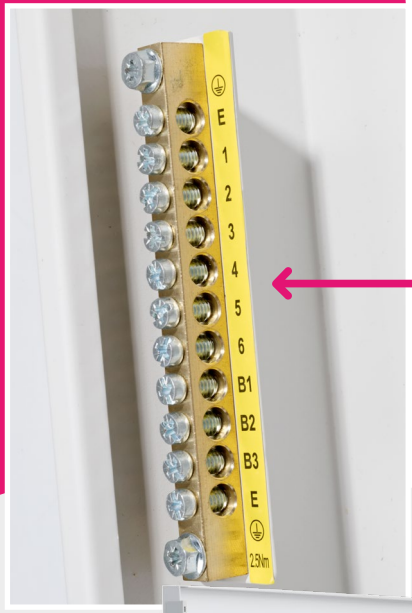

Large, easy to terminate terminals

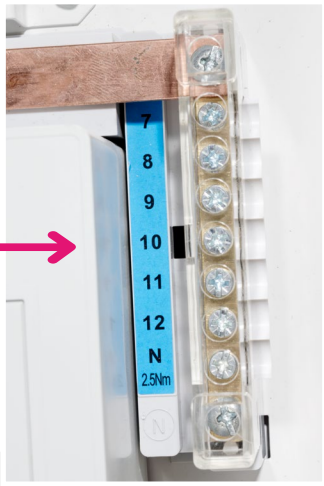

Shrouded Neutral Terminals

SPD mounted beside main switch

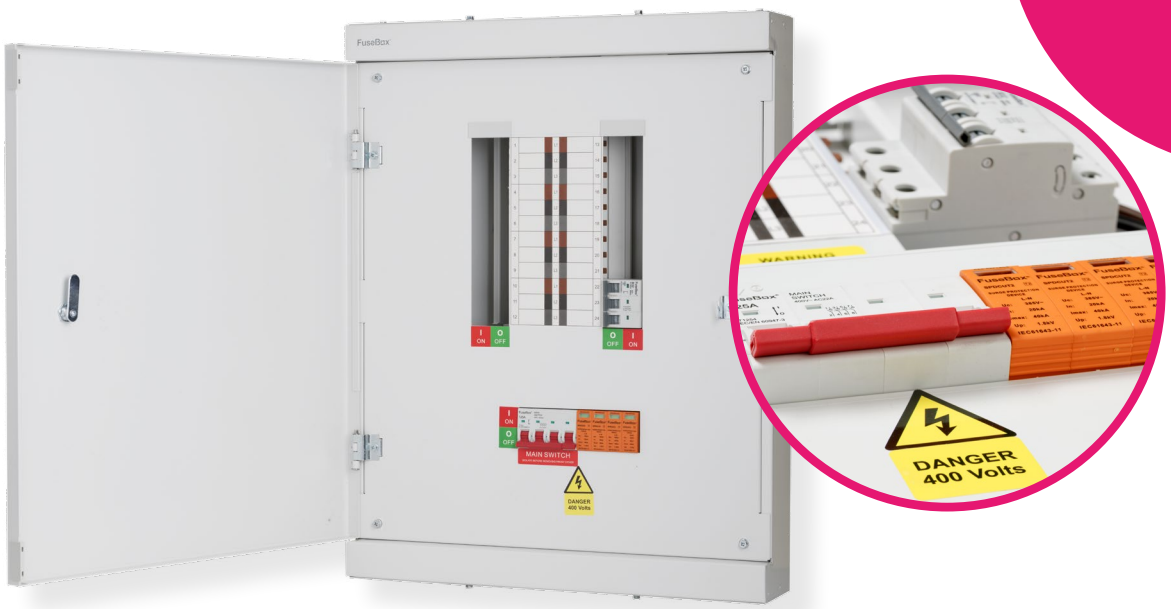

TPN Board with T2 Surge Protection Device (Fitted)

Part No.	Usable Ways	Dimensions HxWxD (mm)
TPN03FBX	3 WAY T2 SPD 125A 4P MAIN SWITCH	542 x 500 x 113
TPN07FBX	7 WAY T2 SPD 125A 4P MAIN SWITCH	642 x 500 x 113
TPN11FBX	11 WAY T2 SPD 125A 4P MAIN SWITCH	812 x 500 x 113
TPN15FBX	15 WAY T2 SPD 125A 4P MAIN SWITCH	992 x 500 x 113

TPN Board (SPD can be retro fitted. Deduct 1 usable way.)

Part No.	Usable Ways	Dimensions HxWxD (mm)
TPN04FB	4 WAY 125A 4P MAIN SWITCH	542 x 500 x 113
TPN08FB	8 WAY 125A 4P MAIN SWITCH	642 x 500 x 113
TPN12FB	12 WAY 125A 4P MAIN SWITCH	812 x 500 x 113
TPN16FB	16 WAY 125A 4P MAIN SWITCH	992 x 500 x 113

FuseBox®

Example Shown **TPNEBFB**

TPN Extension Board

Part No.	Description	Dimensions HxWxD (mm)
TPNEBFB	TPN EXTENSION BOARD 14MOD	352 X 500 X 113
TPNMMB	TPN 125A MOD BUS METER BOARD	352 X 500 X 113

T2 Surge Protection Device

Part No.	Description
SPDCUKITT2TPN	T2 SPD 3P+NPE TPN KIT (INC CABLES+3P B32 MCB)

MINIATURE CIRCUIT BREAKERS 10kA

MCB 1 POLE 10kA

Carton quantity:12

	B CURVE	C CURVE	D CURVE
	Part No.	**Part No.**	**Part No.**
6A	MT10B061	MT10C061	MT10D061
10A	MT10B101	MT10C101	MT10D101
16A	MT10B161	MT10C161	MT10D161
20A	MT10B201	MT10C201	MT10D201
25A	MT10B251	MT10C251	MT10D251
32A	MT10B321	MT10C321	MT10D321
40A	MT10B401	MT10C401	MT10D401
50A	MT10B501	MT10C501	MT10D501
63A	MT10B631	MT10C631	MT10D631

MCB 2 POLE 10kA

Carton quantity:6

	C CURVE	D CURVE
	Part No.	**Part No.**
6A	MT10C062	MT10D062
10A	MT10C102	MT10D102
16A	MT10C162	MT10D162
20A	MT10C202	MT10D202
25A	MT10C252	MT10D252
32A	MT10C322	MT10D322
40A	MT10C402	MT10D402
50A	MT10C502	MT10D502
63A	MT10C632	MT10D632

MCB 3 POLE 10kA

Carton quantity:4

	B CURVE	C CURVE	D CURVE
	Part No.	**Part No.**	**Part No.**
6A	MT10B063	MT10C063	MT10D063
10A	MT10B103	MT10C103	MT10D103
16A	MT10B163	MT10C163	MT10D163
20A	MT10B203	MT10C203	MT10D203
25A	MT10B253	MT10C253	MT10D253
32A	MT10B323	MT10C323	MT10D323
40A	MT10B403	MT10C403	MT10D403
50A	MT10B503	MT10C503	MT10D503
63A	MT10B633	MT10C633	MT10D633

RCBO 30mA 10kA (TYPE A)

	B CURVE	C CURVE
	Part No.	**Part No.**
6A	RTA100630B	RTA100630C
10A	RTA101030B	RTA101030C
16A	RTA101630B	RTA101630C
20A	RTA102030B	RTA102030C
25A	RTA102530B	RTA102530C
32A	RTA103230B	RTA103230C
40A	RTA104030B	RTA104030C
50A	RTA105030B	RTA105030C

RCD 4P (63A – 100A)

Type A	
Part No.	**Description**
RTA0630304	63A 30mA 4P TYPE A RCD
RTA0800304	80A 30mA 4P TYPE A RCD
RTA1000304	100A 30mA 4P TYPE A RCD
RTA1001004	100A 100mA 4P TYPE A RCD
RTA1003004	100A 300mA 4P TYPE A RCD

RCD 4P (S type) Time delayed

Type S	
Part No.	**Description**
RTA1001004S	100A 100mA 4P TYPE S RCD

RCD 4P (Type B)

Type B	
Part No.	**Description**
RTB630304M	63A 30mA 4P TYPE B RCD

RCD TPN fitting kit

Part No.	Description
ARCDLKTPN	4P RCD LINK KIT FOR TPN

TPN ACCESSORIES

Part No.	Description
ABEC	TPN BUSBAR END CAPS (30)
TPNSPLFB	TPN SINGLE PHASE FORK 125A

ABEC

Busbar end caps
NOT to be used in conjunction ADRBTPN

TPNSPLFB

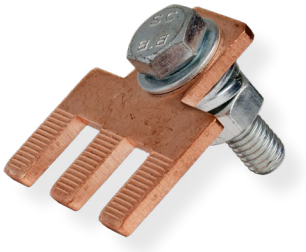

Copper link to convert TPN to single phase (L1,L2,L3)

Module Blanks

Part No.	Description	Module
ADRBTPN	MODULE BLANK DINRAIL MOUNTING (1PC)	1
AMBM	MODULE BLANKS METAL (6PCS)	6
AMBP	MODULE BLANKS ABS (12 PCS)	12

Accessories

FuseBox®

Bell Transformer

Part No.	Description	Module
ABTR	BELL TRANSFORMER 8V 1A	2
ABTR16	BELL TRANSFORMER 16V/0.5A	2

Installation Contactors

Supplied With 2x9mm Heat Dissipation Spacers (+1)

Part No.	Description	Module
INC202	20A 2P N/O 230V	1 (+1)
INC254	25A 4P N/O 230V	2 (+1)
INC402	40A 2P N/O 230V	2 (+1)
INC632	63A 2P N/O 230V	2 (+1)
INC634	63A 4P N/O 230V	3 (+1)

kWH Meter (M.I.D. Approved)

Part No.	Description
KWH1M45	kWH METER 45A 230V

Time Clock

Part No.	Description
TD1	DIGITAL TIME CLOCK 7 DAY 1CH 150HR RESERVE

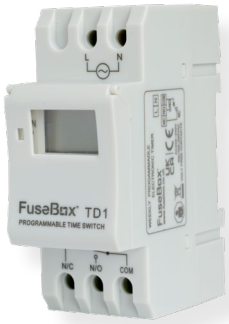

MAIN SWITCHES (4 Pole)

Part No.	Description
IT1004	100A AC22A MAIN SWITCH 4POLE
IT1254	125A AC22A MAIN SWITCH 4POLE
IT1253N	125A 3P MAIN SWITCH + UNSWITCHED NEUTRAL

CONNECTORS

Part No.	Description
IT1002U	100A 2POLE CONNECTOR DIN RAIL MOUNTED
IT1003U	100A 3POLE CONNECTOR DIN RAIL MOUNTED
IT1004U	100A 4POLE CONNECTOR DIN RAIL MOUNTED
IT1252U	125A 2POLE CONNECTOR DIN RAIL MOUNTED
IT1253U	125A 3POLE CONNECTOR DIN RAIL MOUNTED
IT1254U	125A 4POLE CONNECTOR DIN RAIL MOUNTED

Dimensions

FuseBox®

TPN03FBX / TPN04FB

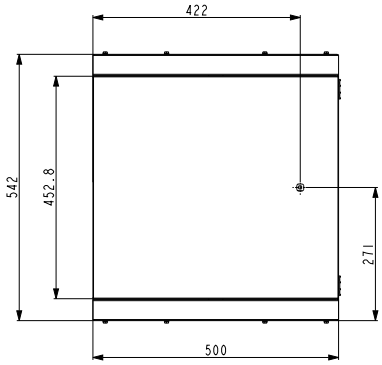

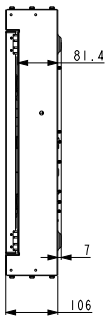

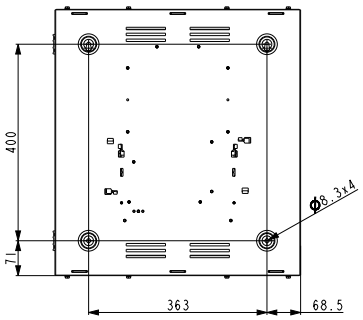

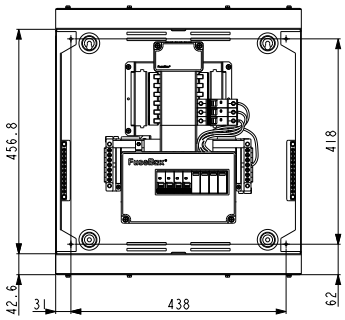

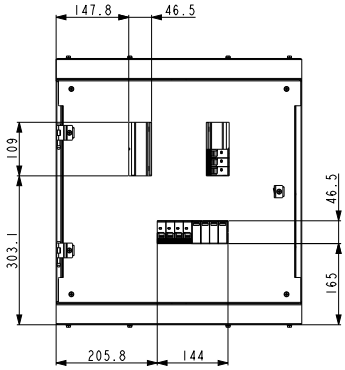

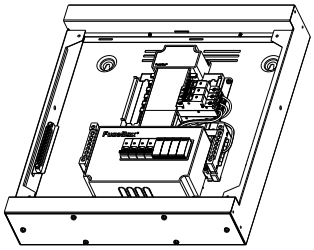

TPN07FBX / TPN08FB

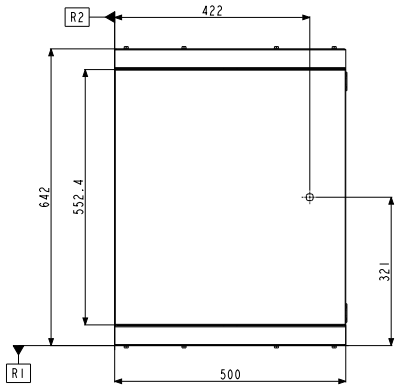

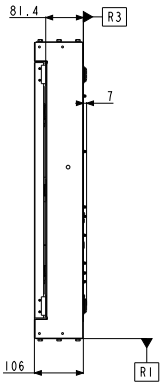

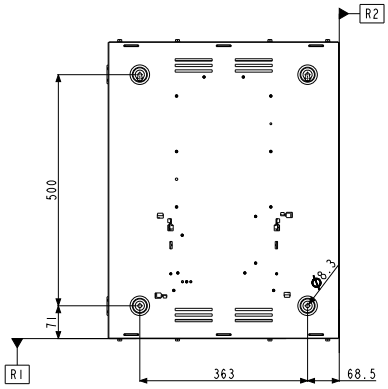

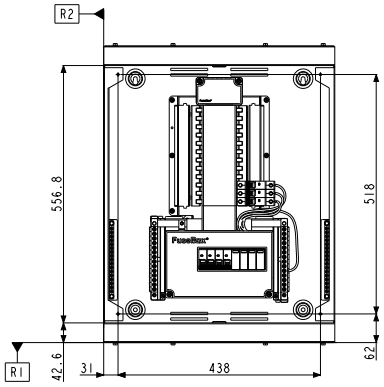

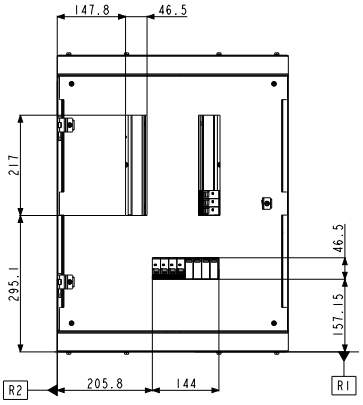

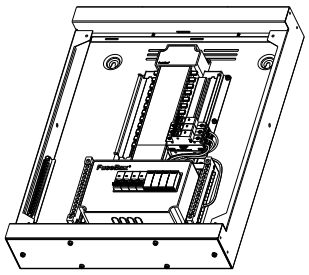

Dimensions

TPN11FBX / TPN12FB

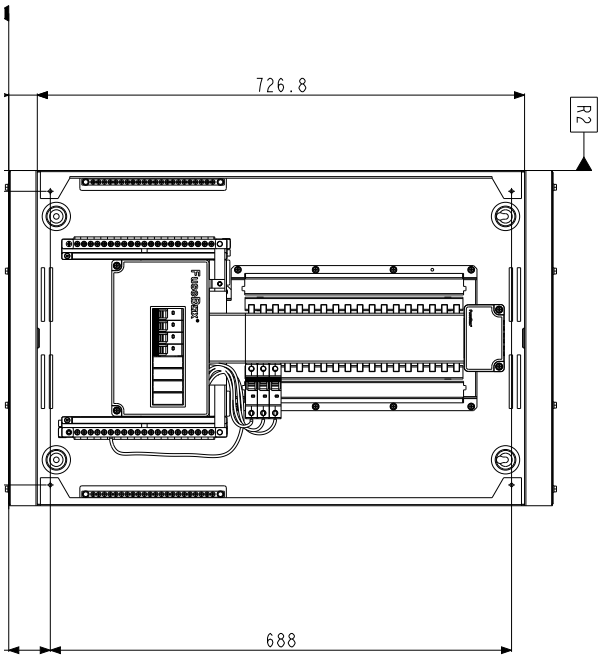

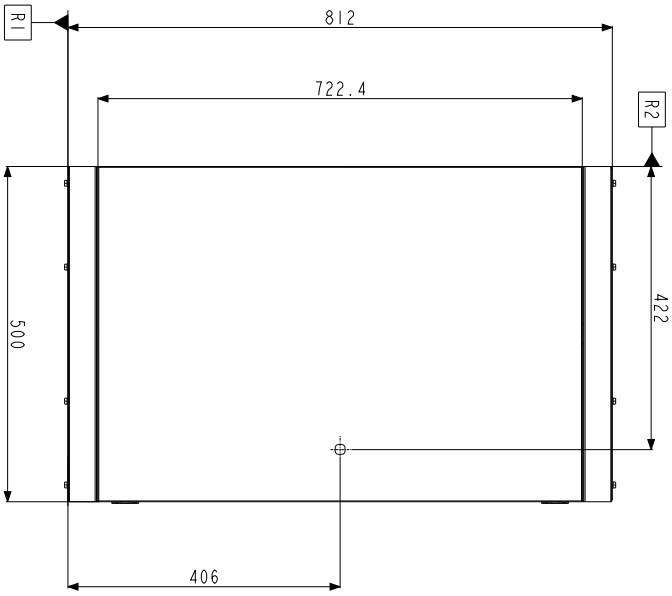

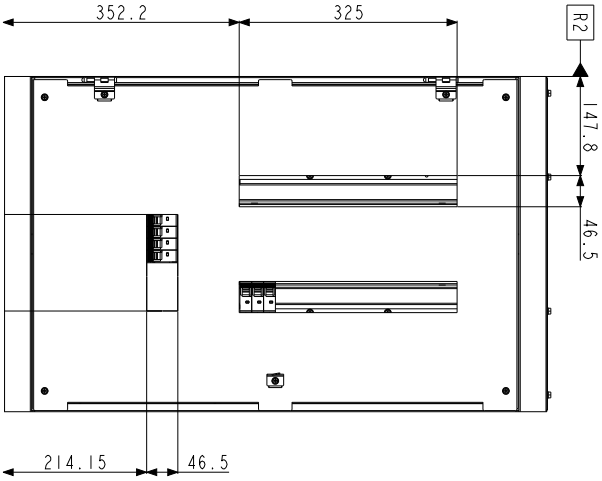

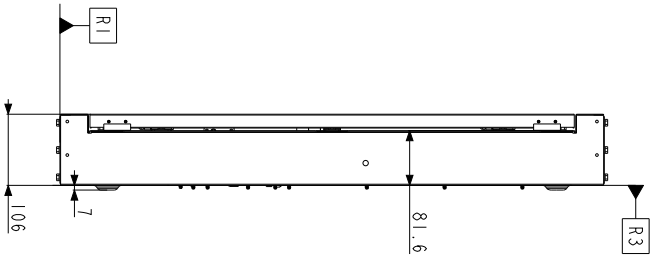

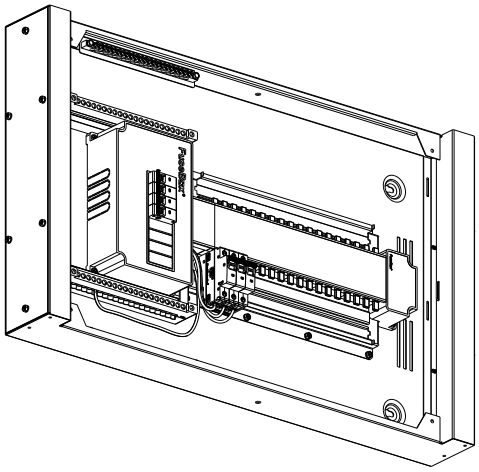

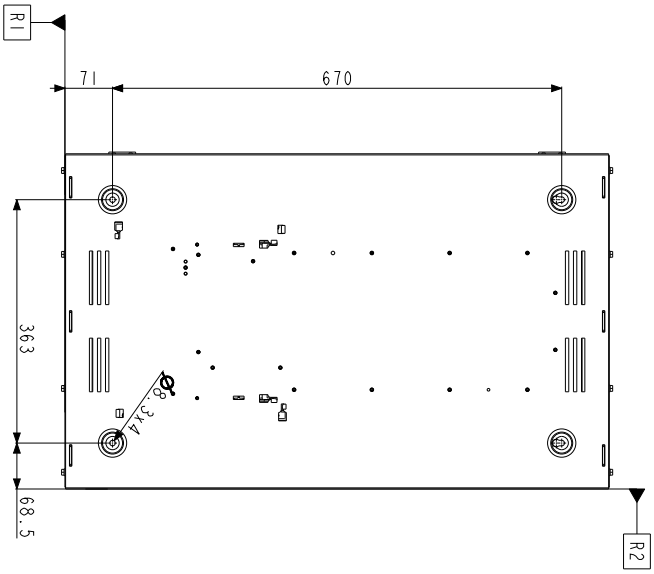

Dimensions

FuseBox®

TPN15FBX / TPN16FB

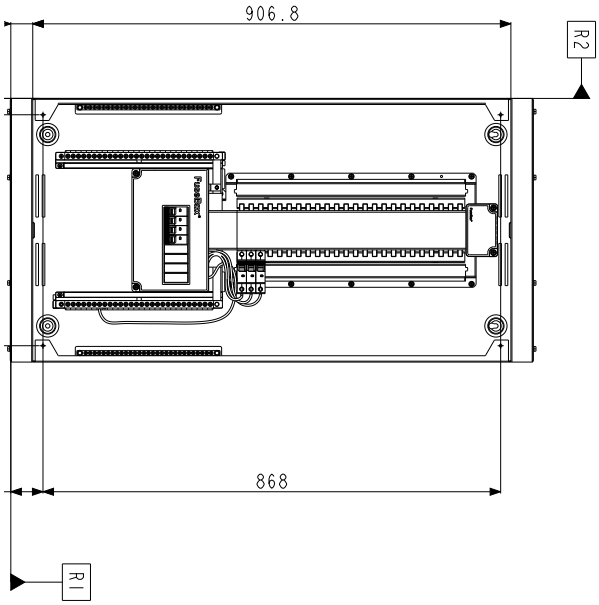

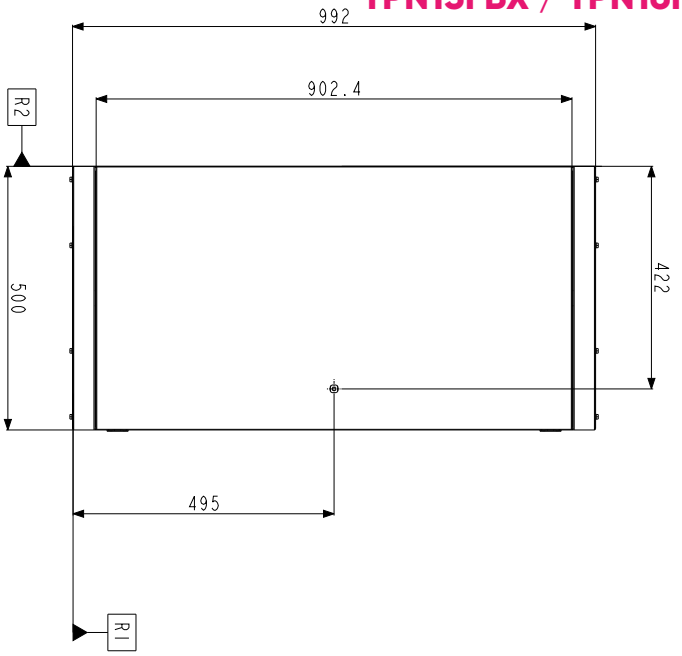

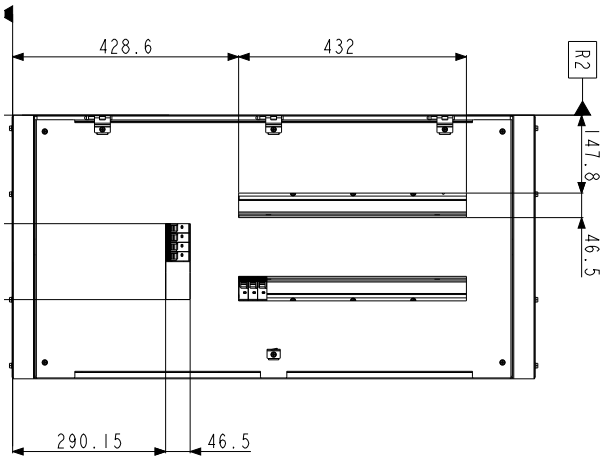

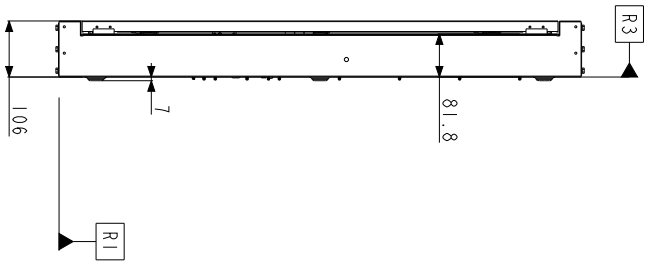

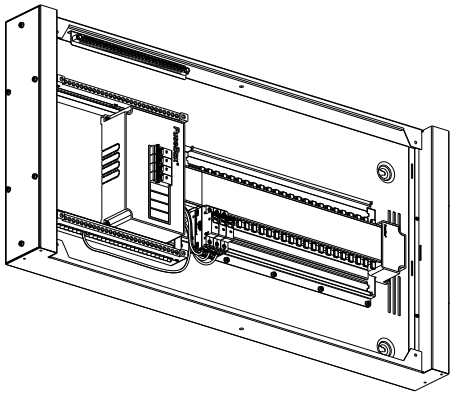

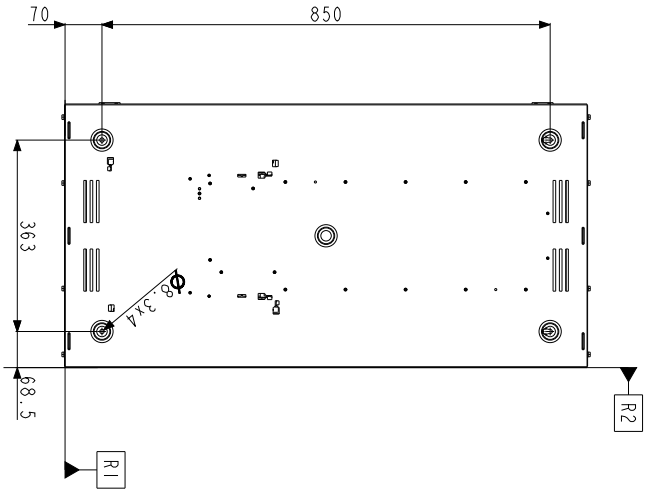

Dimensions

TPN15FBX / TPN16FB

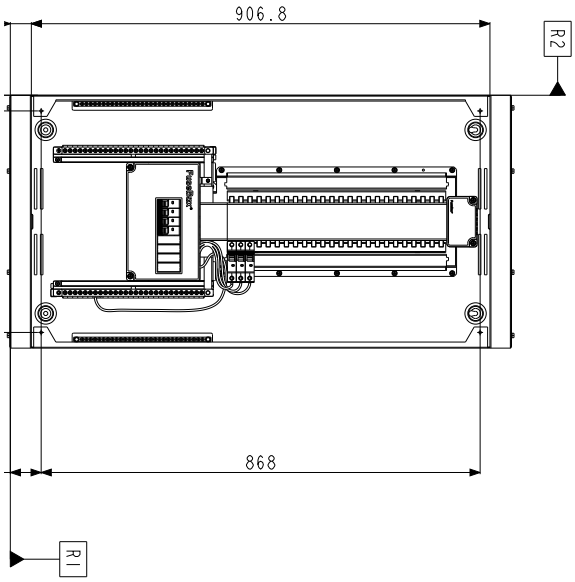

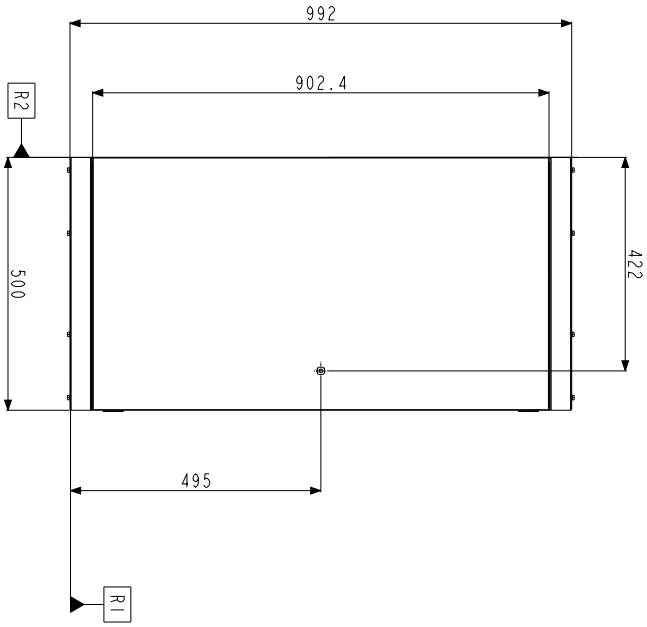

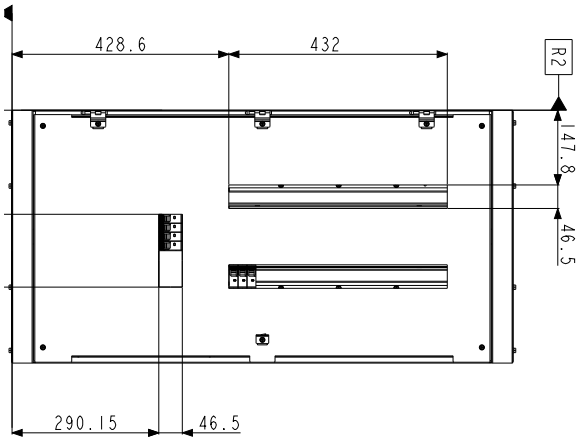

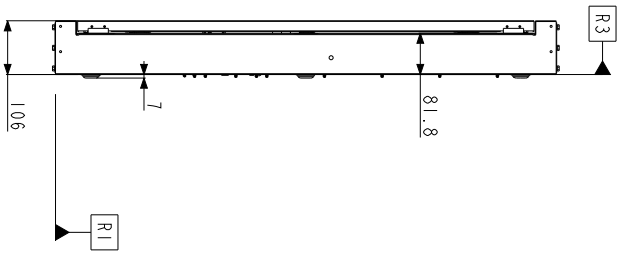

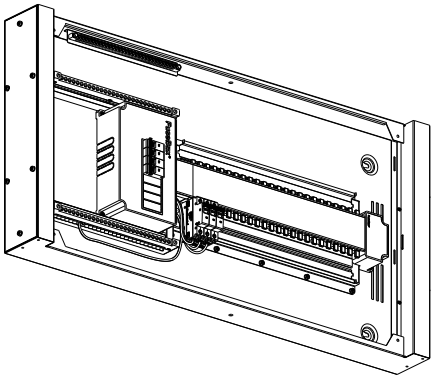

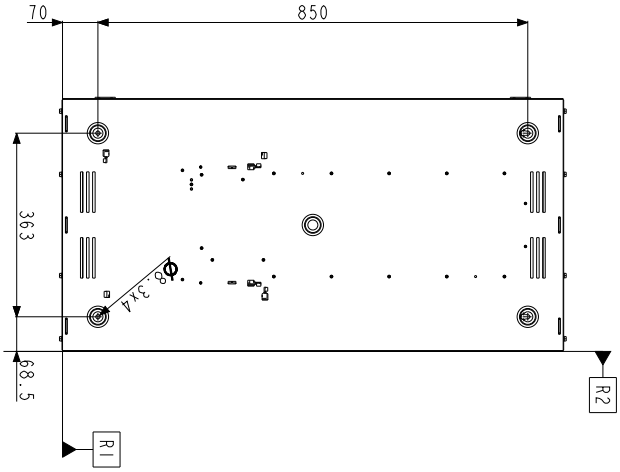

Dimensions

FuseBox®

TPNEBFB / TPNMMB

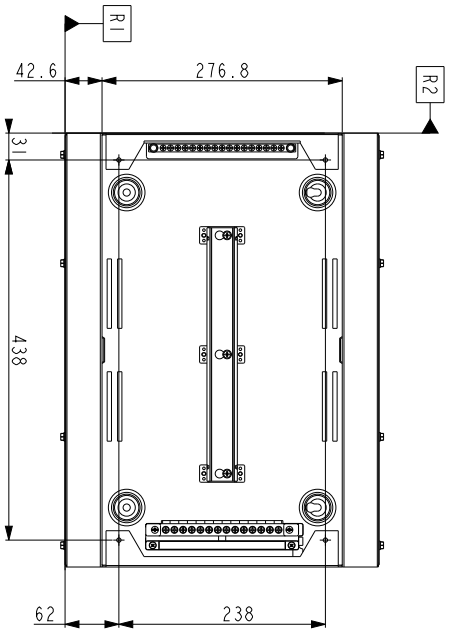

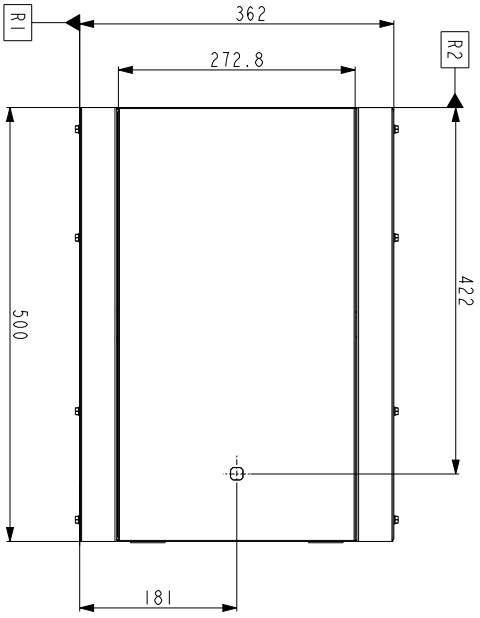

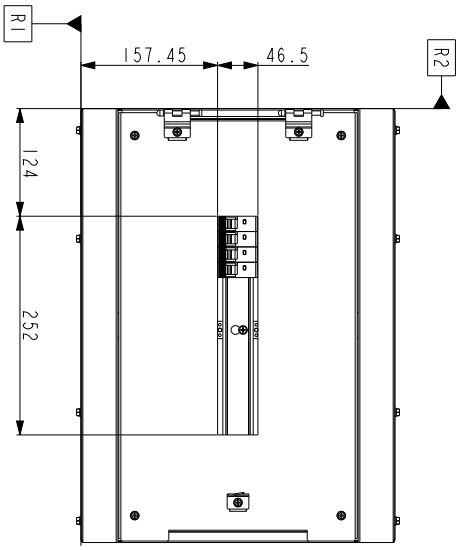

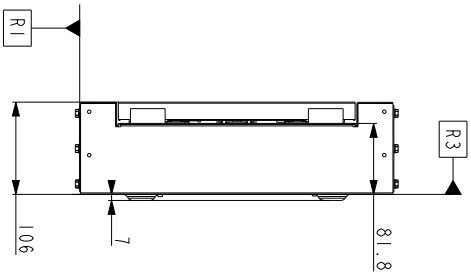

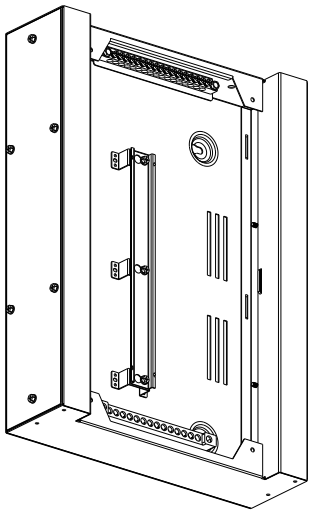

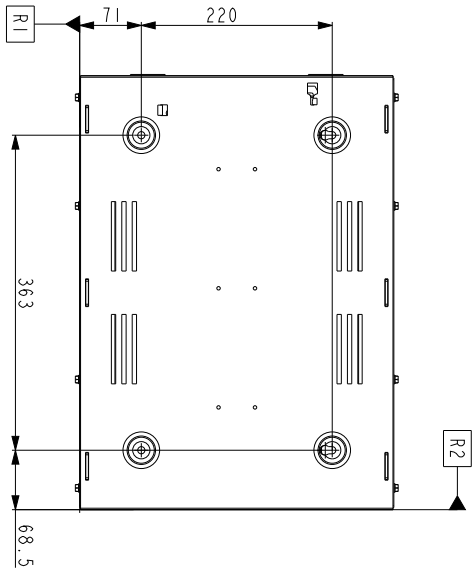

3 Phase Boxes!

Domestic, commercial and industrial installations –
the FuseBox range of TPN distribution boards, with T2 SPD and 125A 4Pole main switch as standard.

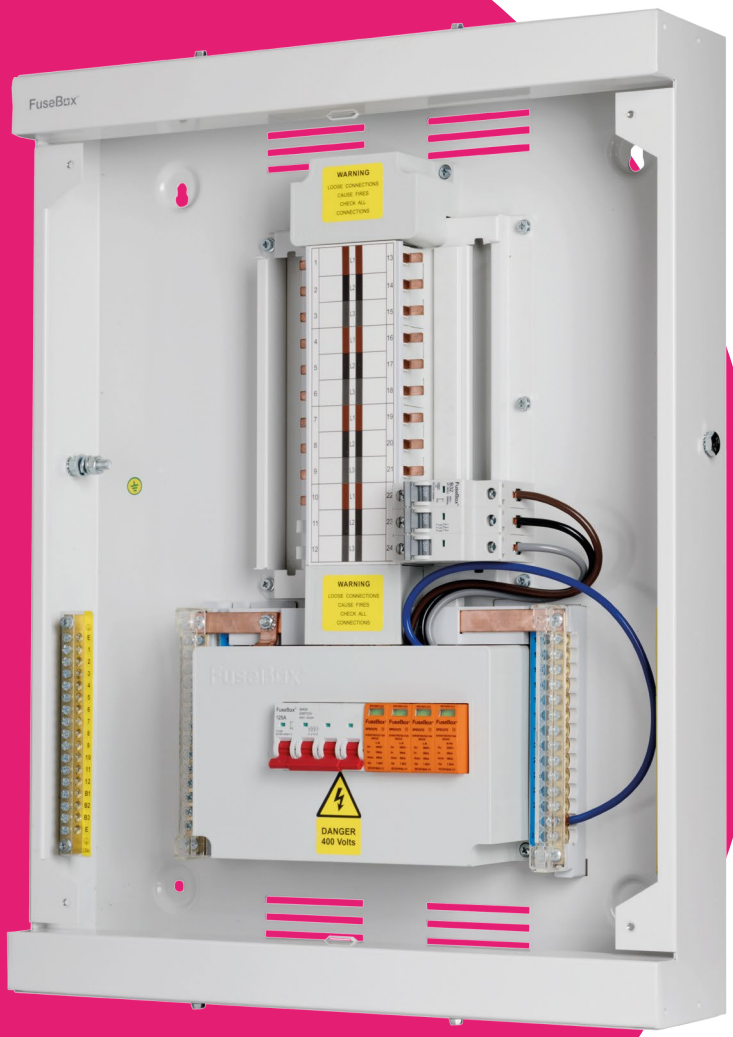

Photography is for illustrative purposes only and the product you receive may differ slightly due to continued product development. FuseBox is the trading name of CP (Electric) Ltd. All goods are sold subject to CP (Electric) Ltd terms and conditions of sale.

FuseBox®

Making Electricians Smile!

fusebox.co.uk | 01563 533 554 | UK CA CE

Find Your Local Stockist

5 060523 525515