ELECTRIC VEHICLE CHARGER

Model: VEC01 VEC02
VEC03 VEC04

Apple

evec App
Download

Android

evec App
Download

READ AND SAVE THESE INSTRUCTIONS
Installer: Leave this manual with the owner

TABLE OF CONTENTS

SAFETY INSTRUCTIONS 4

USER INSTRUCTIONS 5

- TECHNICAL DATA 5
- PRODUCT DESCRIPTION 6
- PRODUCT DIMENSIONS 6
- INDICATOR LIGHT 7
- POWER MANAGEMENT 8
- BUTTON FUNCTIONS 8

INSTALLATION INSTRUCTIONS 10

- UNPACKING 10
- ATTACHMENT 10
- TOOLS/MATERIALS REQUIRED 11
- BEFORE INSTALLATION 11
- INSTALLATION LOCATION 11
- WARNING 12
- CONNECT ELECTRICAL WIRING 12
- INSTALLATION 13
- INSTALLATION OF THE CHARGER HOLDER 18
- SET THE DIP SWITCH 19
- INSPECTION 19

APP INSTRUCTION 20

- REGISTER 20
- ADD DEVICE 20
- OPERATE INTRODUCTION 22
- FAULT INTERFACE 25

MAINTENANCE 26

TROUBLESHOOTING 27

SAFETY INSTRUCTIONS

Important note: Please read this booklet before installing and switching on this appliance. The manufacturer assumes no responsibility for incorrect installation and usage as described in this booklet. Keep the instruction book for future reference. All the information in the manual is valid for the charging station model in this manual.

This instruction book details the install guidance for the EVEC car charger VEC01/VEC02/VEC03/VEC04. If you're unsure which model you have, please check the rating label on the bottom of the charger.
The EVEC car charger is designed for installations inside or outside, with the Innovative safety systems we have built into the charger ensuring its safe usage. This guidance provides information to assist when installing the unit. The charger must be professionally installed by a qualified electrician according to local and national regulations applicable at the time of installation and used in accordance with the manufacturer's instructions.

The EVEC car charger is designed to be connected to an electrical installation that already complies with BS7671 standard as a minimum. The unit should be connected to one dedicated AC supply only and the supply must be adequately rated for the additional load required for EV charging.

● This unit must be grounded (Earthed).
● This unit is only to be installed by a qualified electrician in accordance with local building and electrical codes and standards.
● This unit is designed to connect a electrical supply voltage of AC220V~240V 50/60Hz for single phase series (VEC01/VEC03) / AC380V~450V 50/60Hz for three-phase series(VEC02/VEC04).
● The charger must be installed on a secure solid surface that can support the weight of the charger. Failure to install on a secure surface or not in accordance with electrical regulations could lead to death, personal injury, or property damage.
● This appliance is designed to be used by adults, do not allow children to play with the appliance or let them hang over the charger.
● Do not put fingers into the socket or connector.
● This unit is not suitable for use in dangerous places where there is high amounts of dust, dangerous gas or in an explosive and flammable environment.
● In order to ensure the electrical safety of the unit, the product body shell must be fixed to the correct position with fasteners that come with the product and the seals used to ensure the IP rating is maintained.
● The unit's inlet position (front face) must be tightly sealed to be waterproof and dustproof to ensure the products IP rating.
● Do not use this unit other than its intended purpose.
● Do not use if the socket or connector or cable is damaged.
● Disconnect the charging from the vehicle prior to driving off.
● To prevent electrical shock,do not plug-in or un-plug with wet hands .
● Do not use a power washer to clean or wash the car charger.
● It is recommended not to use in a location that can be reached by rain, suggest increase rain protection measures.
● Do not install in areas of high-risk chance of impact by vehicles or a high risk of trip hazard.

Important: Under no circumstances will compliance with the information in this manual relieve the user of his/her responsibility to comply with all applicable codes or safety standards.

USER INSTRUCTIONS

TECHNICAL DATA

Item	Datasheet \ Model	VEC01	VEC02	VEC03	VEC04
Input	Power Supply	1P+N+PE	3P+N+PE	1P+N+PE	3P+N+PE
	Rated Voltage	AC220 ~ 240V 50/60Hz	AC380 ~ 450V 50/60Hz	AC220 ~ 240V 50/60Hz	AC380 ~ 450V 50/60Hz
	Rated current	Max 32A (6-32A adjustable)			
Output	Output Voltage	AC220 ~ 240V 50/60Hz	AC380 ~ 450V 50/60Hz	AC220 ~ 240V 50/60Hz	AC380 ~ 450V 50/60Hz
	Maximum Current	Max 32A (6-32A adjustable)			
	Rated Power	7.4KW	22KW	7.4KW	22KW
User interface	Charger socket or connector	Type 2			
	Material	ABS +PC Flammability Rating V - 0			
	Colour	Black			
	Indicator light	Three colour LED			
Safety	Ingress Protection	IP54		Enclosure: IP65 Connector:IP54	
	PCB protection	Over current protection The max 32A-Recommended 36A			
		Residual current protection (AC 30mA Type A, DC6mA)			
		Earth check			
		Over/Under voltage protection			
		Over temperature			
		PEN fault protection			
	Certification	CE, UKCA			
	Certification Standard	EN 61851,EN 62196			
Power consumption	Standby power consumption	<10W			
Enviroment	Installation	Wall mounted			
	Work Temperature	-25˚C~50˚C			
	Work Humidity	3%~95%			
	Work Altitude	<2000m			

For Customer Services & Spare Parts please call 0161 249 6780
Opening times: Monday - Friday 8am – 5pm

USER INSTRUCTIONS

PRODUCT DESCRIPTION

1. Front cover
2. Working status indicator
3. Socket
4. Function button
5. Charger holder
6. Charging lead and plug

PRODUCT DIMENSIONS

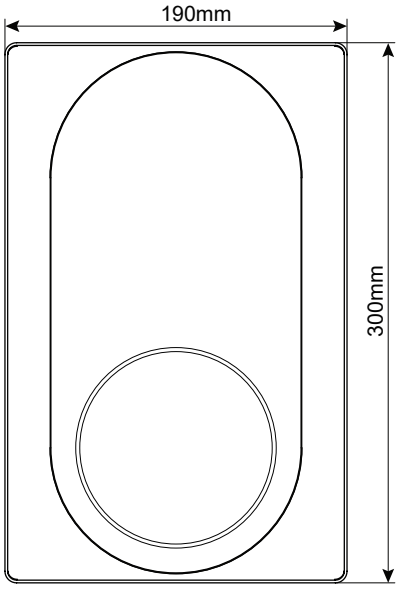

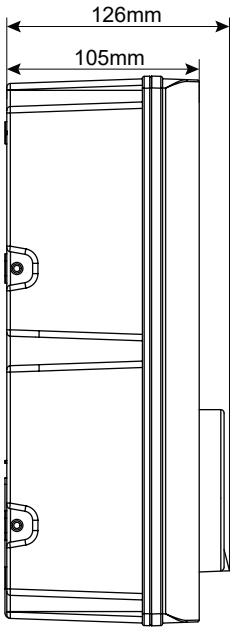

USER INSTRUCTIONS

INDICATOR LIGHT

Light Display Status	Product Status
Blue, green and red flashing alternately	Product power-on self-check
Blue light glowing	Standby
Blue light flashing	Connection confirmation
Green light glowing	Charging
Green light flashing	Turn off charging from APP or OCPP
Red light glowing	Over temperature
Red light flashing One fast, one slow	Emergency stop

USER INSTRUCTIONS

POWER MANAGEMENT

Product with power management function can self-regulate the output current to keep the total household electricity load not exceeding the maximum incoming supply of the household current.
Note: For three phase only. If the current values of the three live wires monitored by the three-phase power are not equal, the product will calculate the minimum output current by itself, and the three output lines will be executed according to this minimum output current;
To set the maximum power after the product is connected to the WIFI, open the APP and go to settings and then Input Orders and set the total allowable current value by typing in Home then the current value. So for 50A set as Home50. For detailed settings, please refer to “Input Orders”.

PEN fault protection

The Protective Earth and Neutral (PEN) conductor refers to part of the electricity supply cable to the property. If this conductor is damaged there is a chance that the chassis of the electric vehicle becoming become “live” and cause an electric shock. BS7671:2018 Amendment 1:2020 part 722.411.4.1 requires that extra protection is provided to prevent an electric shock – either by fitting an earth electrode or through a device which detects the fault and disconnects the supply.
The EVEC charger has RCD2 protection and will disconnect the output if it detects a problem with the PEN conductor or detects that there may be any electric current flowing through the chassis of the EV. This PEN fault protection means that there is no need to install an earth electrode with the unit.
If the unit detects a problem with the PEN conductor then the red light will start flashing two fast, two slow.

BUTTON FUNCTIONS

Function button operation instructions

Function	Operation	Status indicators	Remark
Emergency stop	During normal charging, press once	Red light flashing one fast, one slow	Un-plug the connector
Mode toggle	On standby state: 1.Under APP control mode mode, press 5 times continuously to enter plug and charge mode; 2.Under plug and charge mode, press 5 times continuously to switch the randomized delay off or on; Note: plug and charge mode: automatically starts charging after the connection is confirmed. Randomized delay: the unit operates with a delay of up to 600 seconds at each time.	Beep twice	If you want to cancel plug and charge mode, click schedule by APP on standby state.
WIFI reset	On standby statue, press and hold for more than 10 seconds to reset the WiFi, then re-add the device for pairing connection on the EVEC App	Beep twice	/

For Customer Services & Spare Parts please call 0161 249 6780
Opening times: Monday - Friday 8am – 5pm

USER INSTRUCTIONS

Telecommunication

This product complies with the OCPP1.6J service protocol. After you set the IP and ID by the APP and the network cable is connected to the Ethernet port, the product will automatically connect to the server to enable backstage control. To set the IP and ID, please refer go to the settings in the APP.

NOTE: Instructions for OCPP control setup in commercial / workplaces where a IT security system exists by a firewall

When connecting the charger to be used through OCPP the dip switch must be set and the Ethernet cable connected to the RJ45 port. For OCPP use in workplace environment where a firewall exists then the following will need to be performed by the workplace IT department for the charger to able to be used through OCPP.

In order for the device to send and receive heart beats the firewall will require the mac address to be allowed in and out of the corporate firewall. The mac address can be found on the sticker (rating label) on the bottom of the charger.

NOTE: EV charger with the same mac address cannot be installed under the same router.

If any security features are enabled then the device will require being added to the bypass / whitelist groups. For instance if the firewall has content filtering, DPI-SSL, intrusion prevention then the device will require being white listed through these also.

If you want to do this using IP address, then it will require the IP to be static/reserved.

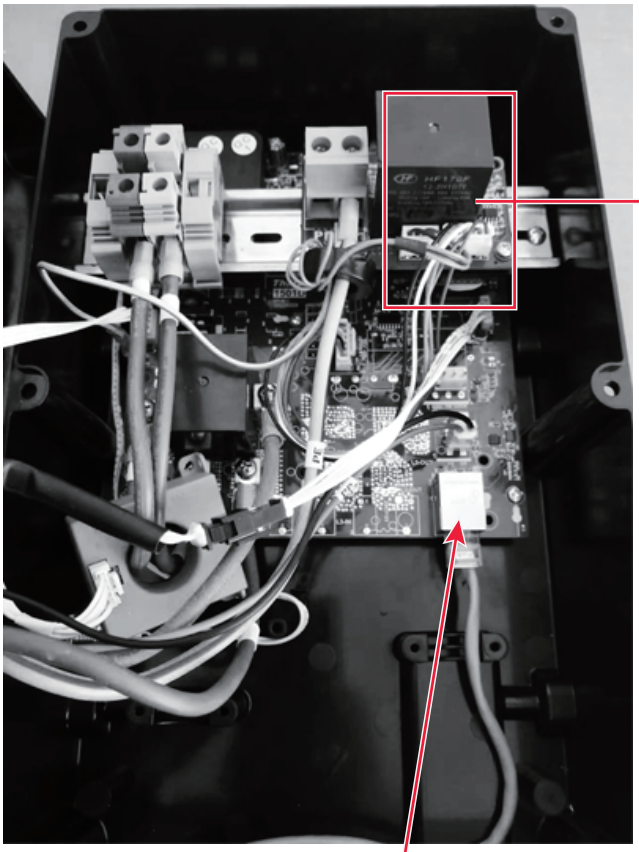

Ethernet Port

Under the PEN module

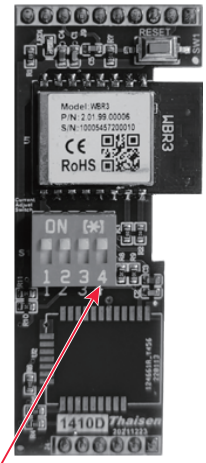

DIP switch position	ON 4	ON 4
CONTROL	APP and OCPP	Only OCPP

NOTE:
1. When you set the DIP4 switch postion to on, both APP and OCPP can control the charger;
2. When you set the DIP4 switch postion to off, only OCPP can control the charger, and the function button can adjust the randomized delay off or on by pressing 5 times.

For Customer Services & Spare Parts please call 0161 249 6780
Opening times: Monday - Friday 8am – 5pm

INSTALLATION INSTRUCTIONS

UNPACKING

1.Take the charger out of the box.
2.Follow the **ATTACHMENT** on page 8 to check all items and to see if there are any missing.
3.Check the unit is correct and whether it matches with order model.
4.Check whether the unit has defects or is damaged due to defectiveness or transportation.
5.Make sure all packaging is disposed of responsibly and in accordance with the current regulations in your region.

ATTACHMENT

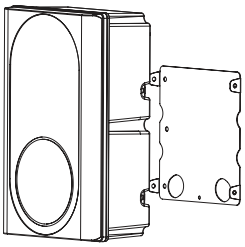

1 x EV Charger & 1 x Fixing bracket *

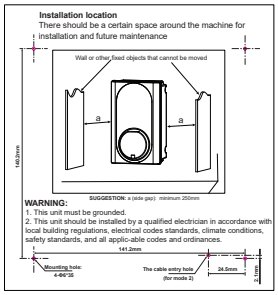

1 x Installation template

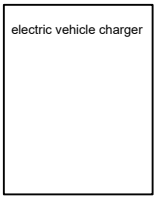

1 x Manual

1 x Elbow wrench

Wiring cap

1 x Sealing rubber

1 x Cable Gland

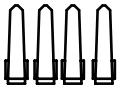

4 x Wall Plugs
M6x30

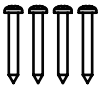

4 x Screw
ST4.2x32

1 x Warranty card

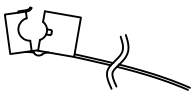

CT**

CT wire terminal**

1 x Sealing rubber

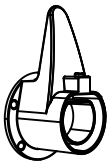

1 x Charger holder***

NOTE: If you are missing any of these parts, contact the customer services 0161 249 6780.
* The bracket is already installed on the charger and needs to be removed for instalaltion.
** This is an optional extra.
*** Just for the charger model with the cable.

INSTALLATION INSTRUCTIONS

TOOLS/MATERIALS REQUIRED (NOT INCLUDED)

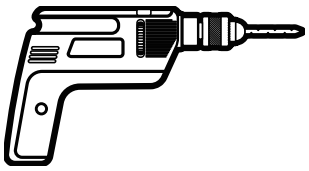

Electric drill

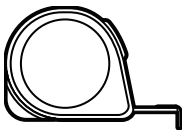

Measuring tape

Safety gloves

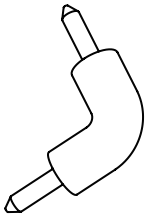

Electric elbow tool

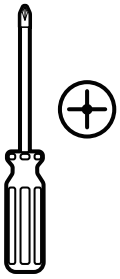

Phillips screwdriver

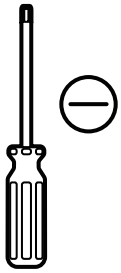

Slotted screwdriver

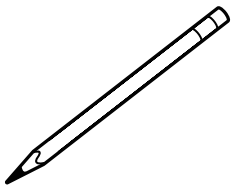

Pencil

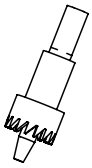

Hole Saws

Mode 1: Φ24mm Bottom hole (for VEC01 and VEC03)
Φ28mm Bottom hole (for VEC02 and VEC04)
Mode 2: Φ18mm (Back hole for Sealing rubber)

BEFORE INSTALLATION

1. Installer or end user must read and understand all the content covered in this manual before installing or using this unit.
2. Choose a suitable installation location to install.
3. Make sure that the installation location complies with current laws and regulations.
4. Confirm that there is a suitable input voltage power supply at the installation site (consistent with the nominal power supply of the product).
5. Make sure the supplied fixings are suitable for the mounting location. If not suitable, alternatives must be obtained locally before proceeding with the installation.

INSTALLATION LOCATION

There should be a certain space around the unit for installation and future maintenance.

SUGGESTION:
a (side gap): minimum 250mm.

*A charging cable holder position needs to be reserved. (Just for VEC03/VEC04)

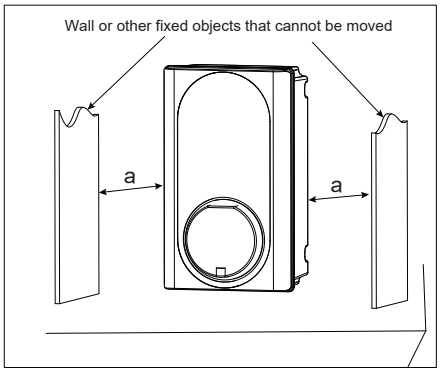

INSTALLATION INSTRUCTIONS

WARNING

▲ Make sure that the power source is turned off before installing the unit.
▲ Manufacturers and distributors are not responsible for any loss or related responsibilities caused by any incorrect installation.
▲ The installer shall not be responsible for the loss and damage of the product, system or property caused by improper installation.

Important:
Before installing the unit, it necessary to confirm the way of the product's power cable entry. Mode 3 power cable entry is strictly not allowed.

Mode 1	Mode 2	Mode 3
Bottom entry (Best choice)	Back entry	It is strictly forbidden to pass the bottom line through the back.
✓ 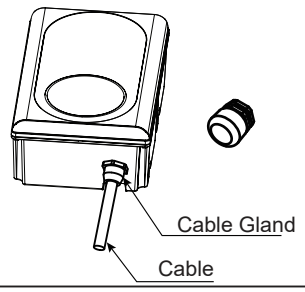	✓ 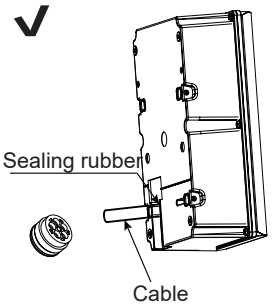	✗ 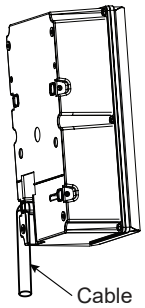

CONNECT ELECTRICAL WIRING

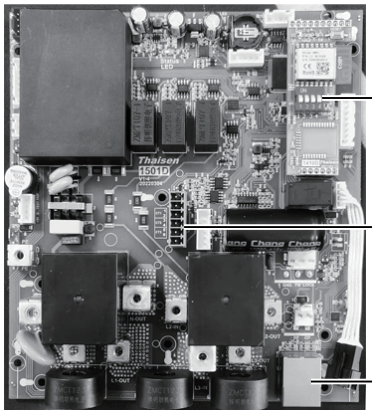

1. DIP switch
2. CT socket
3. Ethernet socket

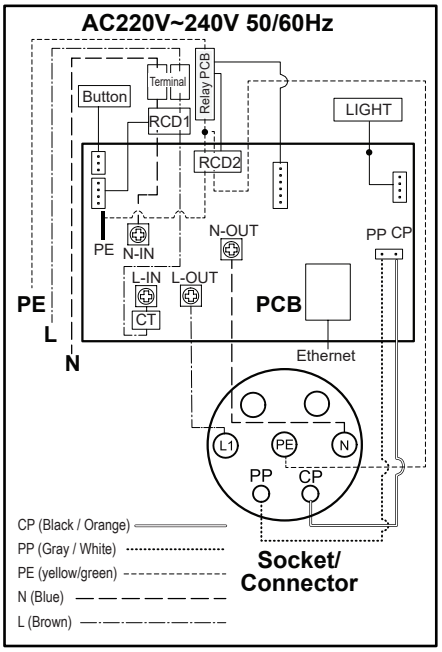

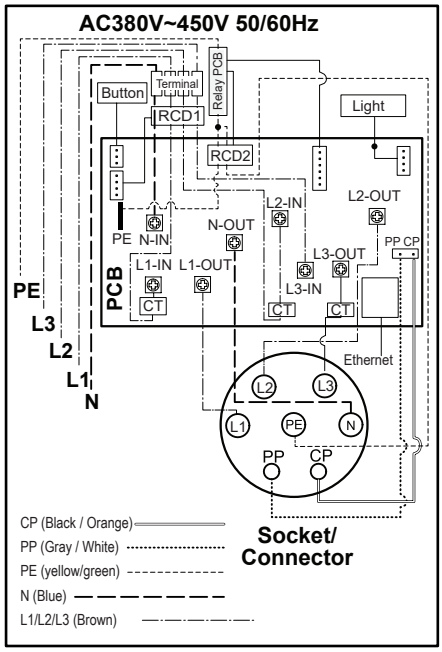

Note: The charger must be electrically protected by installing externally a Miniature Circuit Breaker (MCB) and any other protection devices according to the wiring regulations at the time.

INSTALLATION INSTRUCTIONS

INSTALLATION

1. Take the unit and remove the 4 screws on its fixing bracket (The unit is integrated with the fixing bracket and needs to be disassembled first). Keep the screws and fixing bracket for subsequent use;
2. Remove the 6 fixing screws on the front shell and the rear shell, save the screws for subsequent use;
Note: Reference fig.1 for steps 1 and 2.
3. Open the front shell carefully. The front shell is connected to the unit body through a cable. Be careful not to damage or break the cable.
Caution: After opening the front shell, visually inspect the inside. If the wiring terminal block or the fixed component falls off the track, it can be installed back to the track by itself (reference fig. 2)

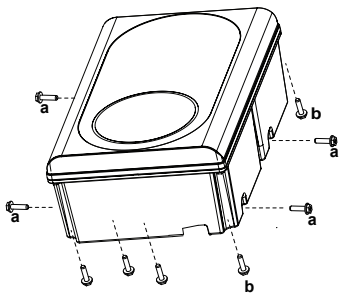

a. 4 x fix bracket fix screw
b. 6 x Front &back shell fixed screws

fig. 1

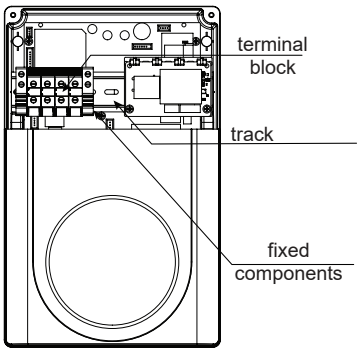

fig. 2

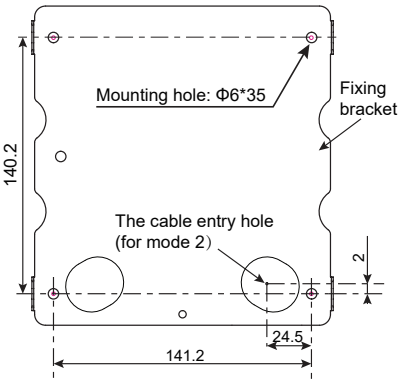

* The installation method 2 in the cable entry template is used for the rear entry of the cable.

unit: mm

4. **Inlet wire mode 1:** Use the installation template to mark the fixed bracket installation hole position.
Inlet wire mode 2: Use the installation template to mark the position of the fixing bracket installation hole and the cable entry hole.
Note 1: Inlet wire mode 2 which need to pay attention to the correct direction of the installation template.
Note 2: Make sure that the installation template itself is level when the position is marked.
Note 3: Refer to Installation template.
5. Drill holes according to the information prompted by the installation template, and ensure that the hole positions are accurate.
(1). Fixed bracket mounting hole has a diameter of 6mm and a depth of about 35mm.
(2). Inlet wire mode 2, diameter of the cable entry hole needs to be defined according to the actual cable selection, However, it is recommended that the maximum opening diameter should not be bigger than 24mm.
Caution: The edge of the wall opening needs to be repaired, and it must not be a sharp edge to prevent the incoming wire from being damaged.
6. Fixing bracket installation hole inner - insert wall plugs, and use attachement screws(ST4.2*32) fixing fixed bracket to the mounting surface and ensure the screws are fastened well.
Note: If the screws are not fastened well, the fixing bracket may become loose and may interfere with the installation of the housing.

For Customer Services & Spare Parts please call 0161 249 6780
Opening times: Monday - Friday 8am – 5pm

INSTALLATION INSTRUCTIONS

7. According to the size and position below, drill the power cable hole on the shell.

NOTE 1: Inlet wire mode1, open hole size must be accurate, and the hole diameter is 24mm for VEC01 and VEC03, 28mm for VEC02 and VEC04.
NOTE 2: Inlet wire mode 2, open hole size must be accurate, and the hole diameter is 18mm.
WARNING: Remove burrs around the hole to prevent affecting the seal level.
WARNING: Do not damage internal components, especially internal wiring, when drilling the hole.
8. Clean and remove all the debris that has fallen into the shell due to the punching.
9. Inlet wire.

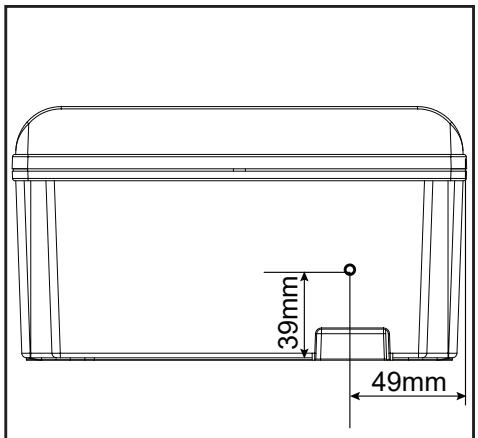

Punch hole position
Inlet wire mode 1

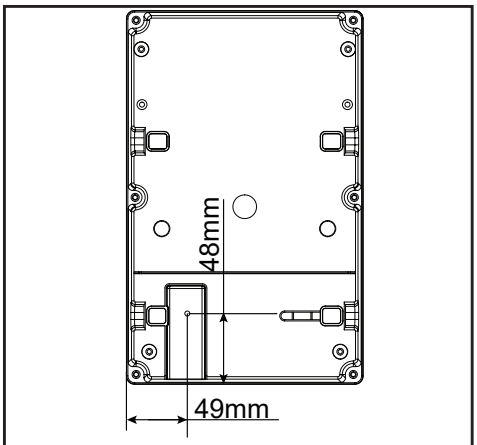

Punch hole position
Inlet wire mode 2

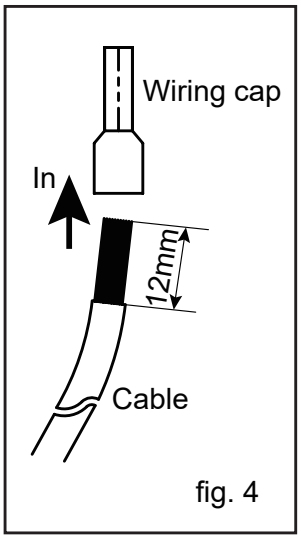

fig. 4

*** NOTE:** Product installation details with OCPP1.6J service agreement. Refer to “Network Connection guide”.
**** NOTE:** Product installation details with power management. Refer to “Power management function installation guide”.

Network Connection guide

1. Drill holes according to fig. 1*.
2.Use the accessory sealing rubber to fix the network cable.
3.One hole of the sealing rubber be cut open with knife, insert the network cable into the sealing rubber,then insert them into the housing,as fig.8, Reserve enough length of the network cable to ensure that it can be well connected with theEthernet interface;
NOTE: During installation， if the network cable line and the pluy is separate,you don’t have to cut the sealing rubber.
Warning: Seal the opening on the back to achieve the unit’s IP rating.sealing is very important. This involves the safety of the product and must be paid attention.
4.Network cable plug is docked to Ethernet interface.

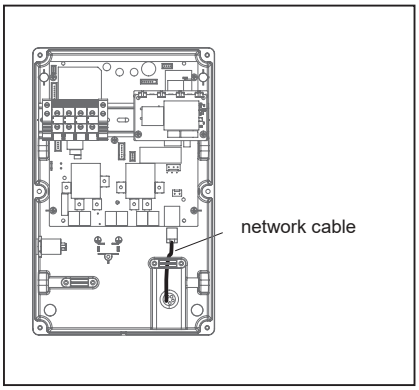

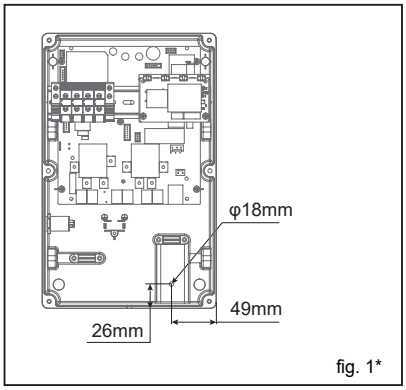

fig. 1*

For Customer Services & Spare Parts please call 0161 249 6780
Opening times: Monday - Friday 8am – 5pm

INSTALLATION INSTRUCTIONS

Power management function installation guide

1. Drill holes according to fig. 1**.
2. Use the accessory sealing rubber to fix the CT wire.
3. Insert the sealing part into the housing body, as fig. 8, thread the CT wire into the sealing part, one hole corresponds to one CT wire (if the product is single-phase, just need to use a sealed wire hole, and the other two do not need to be pierced broken), after the CT cable is inserted, reserve enough length to connect to the CT interface;
4. Crimp the CT wire to the CT wire terminal and then insert it into the CT interface, as following fig. 2**
5. Open the CT and fixed it to the main incoming line (one CT is only allowed to pass through one line, and three CT for three-phase power are allowed to pass through three lines).

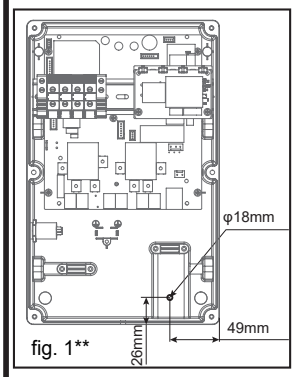

fig. 1**

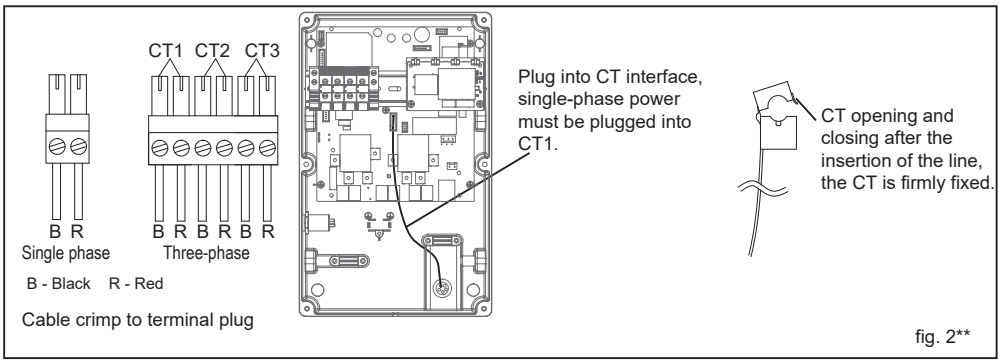

fig. 2**

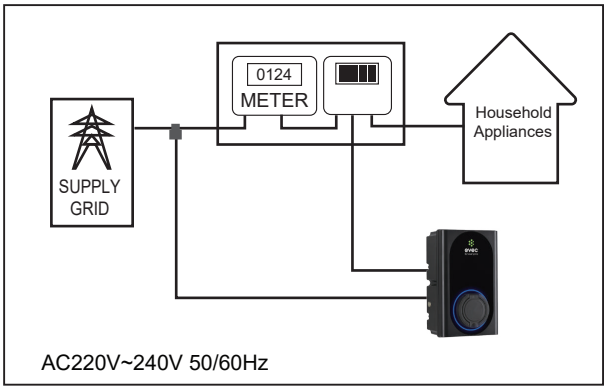

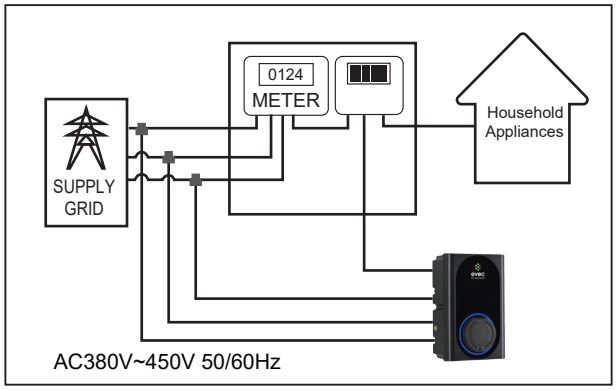

NOTE:
If there is a need to extend the CT cable, **twisted-pair cable like CAT5 must be used**. DO NOT use mains cable, bell wire or speaker cable.
It is important to use only twisted-pair cable to maintain signal integrity. Up to four CT cables can be extended using the separate twisted pairs in a CAT5 Ethernet cable. The cable can be extended up to 40m.

- **Remember to a separated twisted pair for each CT.**
- When joining CT wires make sure that the ends of the wires are twisted tightly together and joined using crimps, screw terminals or solder.
- Avoid using lever clamp type terminals as these do not provide a reliable connection at very low currents.

For Customer Services & Spare Parts please call 0161 249 6780
Opening times: Monday - Friday 8am – 5pm

INSTALLATION INSTRUCTIONS

MODE 1

a1. Check the cable gland parts as shown in fig. 5.

a2. Pass the gasket and the main body through the opening hole of the shell and lock it with a nut, as shown in Fig. 6.

a3. Insert the pressing head into the cable, and then thread the cable into the main body that cannot be pulled off, as shown in Fig. 7.

a4. Trim and cut the cable to the proper length, lock the pressing head to secure the cable.

a5. Refer to this article connect electrical wiring to connect the cable to the terminal block.
NOTE: connecting wiring reference fig. 4
WARNING: To ensure the rated IP protection level of the product, must use the cable gland in the accessories.

a6. Confirm and remove the debris inside the housing caused by punching and wiring.

a7. Ensure that all cables are connected correctly and securely, and are not loose or damaged.

a8. Screws lock the front and rear shells tightly.
Caution: Need to use the screws removed from the original position.
Before installing the front shell, it must be ensured that the sealing strip in the front shell groove has not fallen off and is in the right position. Ensure that all seals performed on the unit can reach the IP rating.

a9. Screw the unit to the fixed bracket.
Caution: Use the screws removed from the original position.
Note: a8, a9 refer to fig. 1, reverse operation.

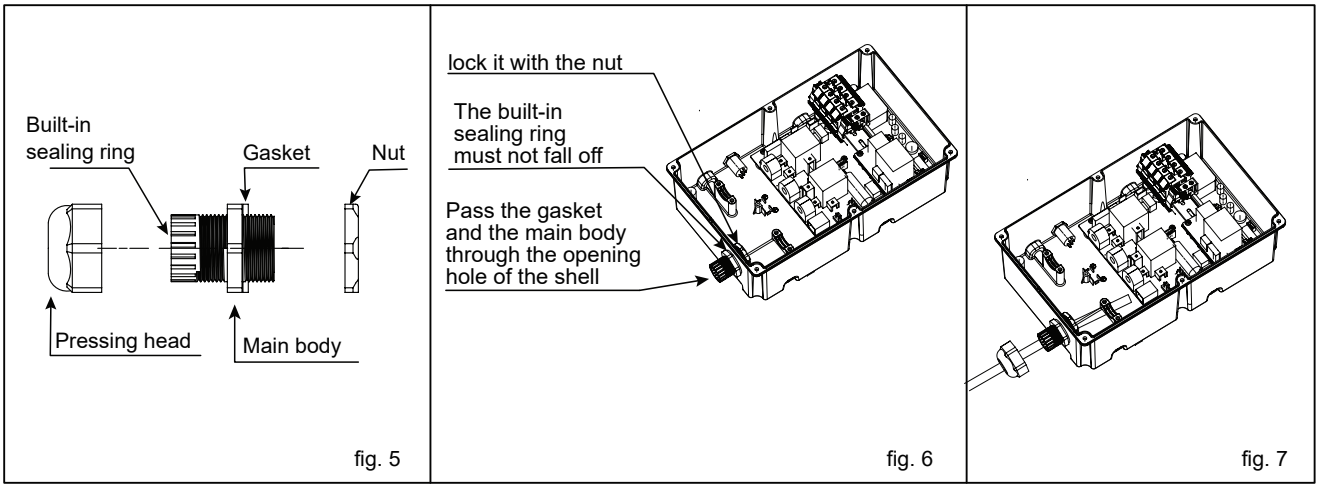

For Customer Services & Spare Parts please call 0161 249 6780
Opening times: Monday - Friday 8am – 5pm

INSTALLATION INSTRUCTIONS

MODE 2

b1. Insert the sealing rubber into the housing, as shown in Fig 8, insert the bare wire into the sealing rubber, one hole corresponds to one bare wire, after all the wires are inserted, leave enough length of the cable to connect to the terminal block.
NOTE1: To ensure the rated IP protection level of the product, must use the sealing rubber in the accessories.
NOTE2: Poke the middle position of the sealing rubber before installing this item.

b2. Screw fastening the entire rear shell to the fixing bracket.
Caution: Use the screws removed from the original position.

b3. Refer to this article connect electrical wiring to connect the cables to the terminal block.
NOTE: connecting wiring refer to fig. 4

b4. Seal the opening on the back to achieve the unit's IP rating.
Warning: sealing is very important. This involves the safety of the product and must be paid attention.

b5. Screws lock the front and rear shells tightly.
Caution: Use the screws removed from the original position.

Before installing the front shell, it must be ensured that the sealing strip in the front shell groove has not fallen off and is in the right position.

Make sure that all seals performed on the unit can reach the IP rating.
Note: if there is no suitable electric tool, the elbow wrench provided in the accessories can be used to tighten the screws of the front and rear shells.

IMPORTANT NOTE: It is the responsibility of the installing engineer to satisfy themselves, that all cable terminations throughout this product are secure and tight and have not become loose, strained, or disconnected during transit and/or installation.

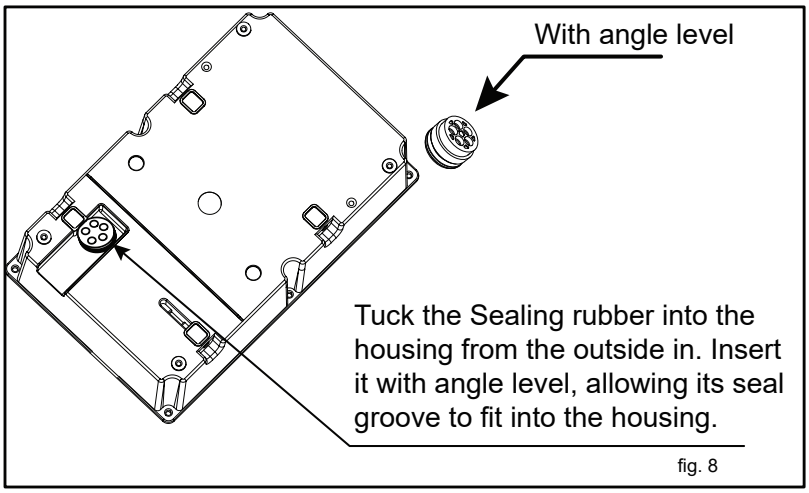

fig. 8

After the front and rear shells are installed, check whether there is a loose gap between the front and rear shells. Make sure that there is no loose gap.

For Customer Services & Spare Parts please call 0161 249 6780
Opening times: Monday - Friday 8am – 5pm

INSTALLATION INSTRUCTIONS

INSTALLATION OF THE CABLE HOLDER

1. Take out the charger holder.
2. Find a suitable location near the EV charger box, which must be more than 0.5m above the bottom surface and not higher than 1.5m.
3. Align the charger holder in position and mark the four mounting holes.
4. Drill the 4 holes as the marks at dia 6mm, 35mm deep.
5. Insert the wall expansion plug.
6. Screw the charger holder to the wall.
7. Installation is complete.

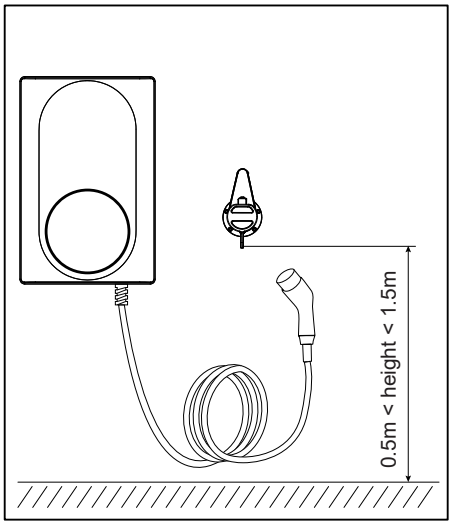

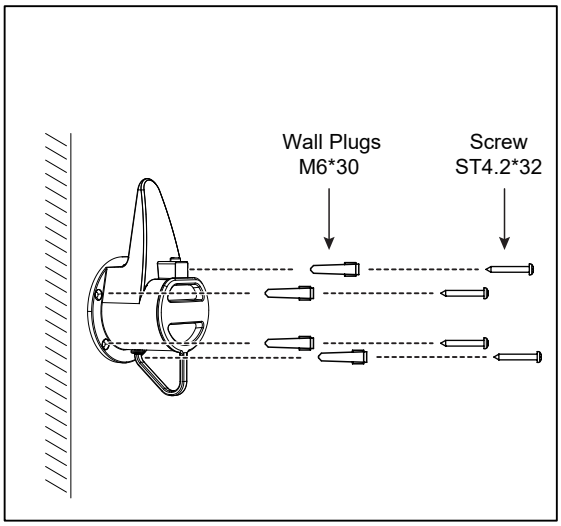

THE INSTRUCTION OF THE CABLE HOLDER

1. There is a clicking sound when the tip is inserted.
2. When pulling out the charger, you must first press the lock button and pull out the charger at the same time.

For Customer Services & Spare Parts please call 0161 249 6780
Opening times: Monday - Friday 8am – 5pm

INSTALLATION INSTRUCTIONS

SET THE DIP SWITCH

You need to set the corresponding position of the current DIP switch according to the min. wire size shown in the chart and the rated current of the Circuit breaker (factory setting 32A). refer to the steps below.

Caution 1: The following operations must be powered off.
Caution 2: Incorrect setting DIP may cause hazards such as overheating or fire of the incoming wire.

1. Locate the position of the two-position DIP switch on the power supply board, like picture.
2. Setting the switch to the desired position:

WARNING: Electrical Power Switches must only be set by a qualified electrical installer. Incorrect setting may lead to equipment damage and / or personal injury. The current rating must not exceed the supply rating.

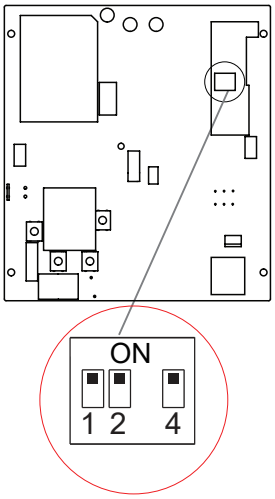

DIP switch position	ON 1 2	ON 1 2	ON 1 2	ON 1 2
Current(A)	32	16	13	10
Min. wire size (copper)	6mm² or 10AWG	2.5mm² or 13AWG	2mm² or 14AWG	1.5mm² or 15AWG
Circuit breaker (Amps)	40	20	20	16

DIP switch position	ON 4	ON 4
CONTROL	APP and OCPP	Only OCPP

NOTE:
1.when you set the DIP4 switch postion to on, both APP and OCPP can control the charger;
2.when you set the DIP4 switch postion to off, only OCPP can control the charger, and the function button can adjust the randomised delay off or on by pressing 5.

INSPECTION

1. Check that this unit must be grounded (Earthed).
2.Make sure you are satisfied that the installation is complete and is in a safe condition.
3.Switch ON the power, which it will cycle the red, blue and green lights to self-check and then enter the corresponding light indication. The unit and test in accordance with the current Electrical Wiring Regulations.
NOTE: Make sure this product has been installed in compliance with the current Electrical Wiring Regulations.

For Customer Services & Spare Parts please call 0161 249 6780
Opening times: Monday - Friday 8am – 5pm

APP INSTRUCTION

REGISTER

Step 1. Application platform download EVEC APP.
You can download it through the QR code on the front cover page of this manual , or google store or APP store.

Step 2. Open the EVEC APP, register an account to log in.
Note: You can register your account through your mobile phone number or email. The following takes mobile phone number registration as an example to describe the steps in detail:

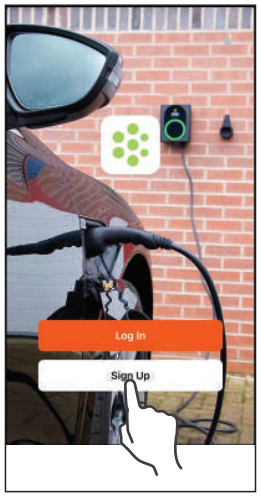

Step 2-1: Click Sign up

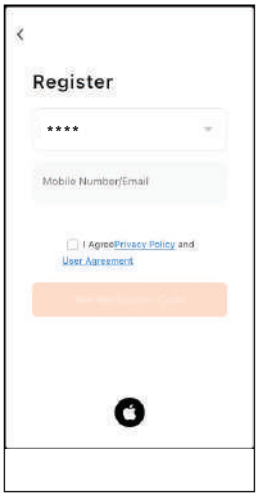

Step 2-2: Check the app agreement, enter the registered mobile phone number and click to get the verification code

Step 2-3: Input verification code.

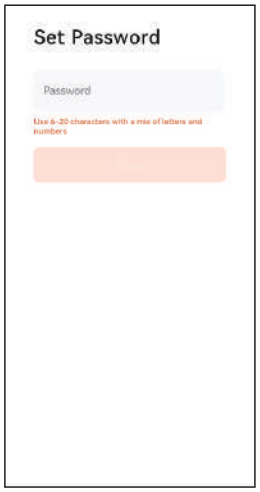

Step 2-4: Input the account login password and click done to complete the registration.

ADD DEVICE

Step 3. Click log in on the App, input the newly registered account and password to log in to the EVEC APP.

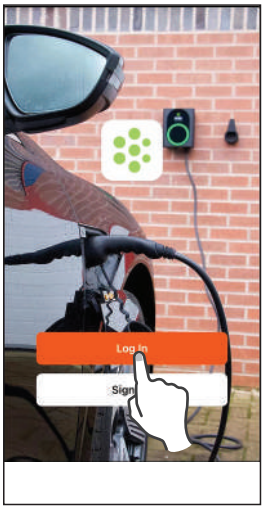

Step 3-1: Click log in

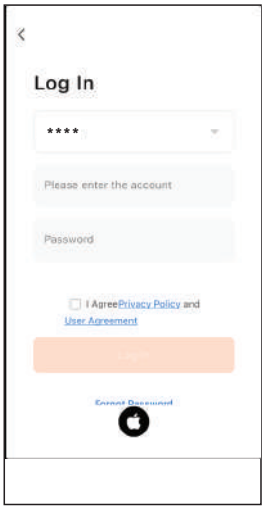

Step 3-2: Check the app agreement, enter the registered account and password, and click log in.

Step 4: Add device.

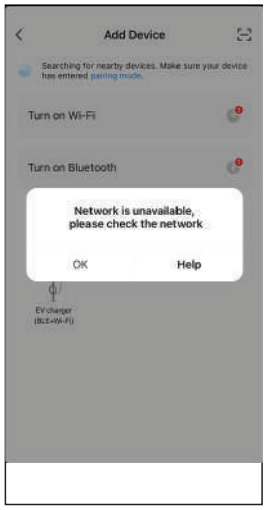

Step 5: Network and bluetooth not turned on.

Step 4. Press the function button on the charger for 10s(beep 2 times) to reset the wifi(refer to the function button instruction for the wifi reset operation guide),Click “Add Device” to add the charger device that needs to be connected.
Note: Make sure the charging lead is not plugged into a car before adding the device.
Step 5. After turning on wifi , bluetooth and geolocation,the EVEC APP automatically searches for the charger.
Note: 1.When connecting the charger,the mobile phone must be **close** vicinity to the charger.

APP INSTRUCTION

2. The charger needs to be connected to WiFi. If the WiFi signal is weak or absent, the charger will not receive the signal or delay the connection. Therefore it is recommended to add an enhancement device for WiFi receiving signal near the charger. Note: To check if your WiFi can reach the charger and have a good signal check your smart device or smart phone whilst standing close to the charger with the WiFi tuned on if the signal can be seen above 2 bars then it is ok if not a WiFi booster or repeater needs to be added. Note: The ethernet port is not for the smart App it is only for OCPP use.

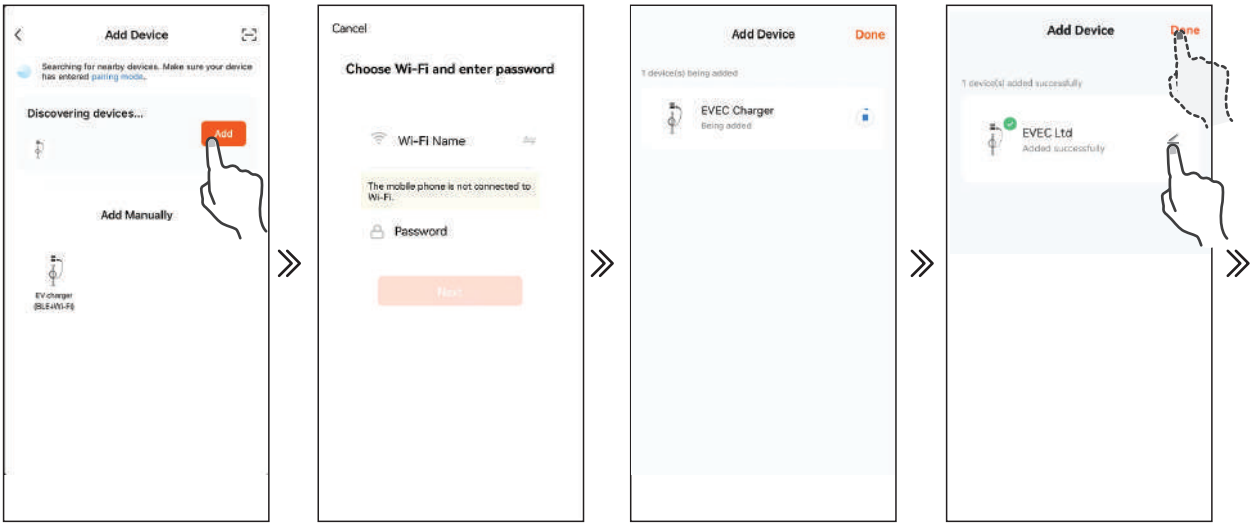

Step 6-1: Click Add. Step 6-2: Enter wifi name and password, then click the next Step 6-3: Loading Step 7

Step 6. After clicking ADD, enter the wifi and wifi password, wait for the device to connect to the network.
Step 7. If you need add a new device name, click "✎" if not, click "done" to confirm the connection is successful.

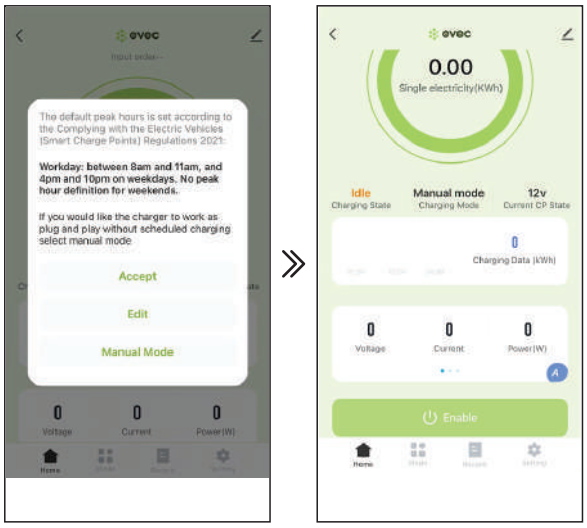

Step 8: Default selection interface Step 10: Device control interface

Step 8. The first connection will appear with the default screen, you can select the default mode, edit the charging time or select the manual mode.
Step 9. Click manual mode.
Step 10. Connecting to the car, after click Enable to start charging, then the charger will charging after randomised delay.

APP INSTRUCTION

OPERATE INTRODUCTION

INTERFACE INTRODUCTION

1. Edit
2. Device name
3. Single charging energy consumption
4. Charging state
5. Charging mode
6. CP state Cumulative
7. Charging energy consumption
8. Charging voltage
9. Charging current
10. Charging power
11. On/off
12. HOME
13. Mode
14. Record
15. Setting
16. Energy consumption record

APP INSTRUCTION

1 Edit

(1). You can set the charger name by clicking " ✎ "
(2). Offline Notification: When the charger is powered off, it will prompt the device to be offline on the home screen.
(3). Share Device: You can share the APP with others by share device. Shared users only have the using right and cannot share the APP again.
NOTE: When using EVEC account to share,the shared account can be added the device without any operation. Refer to the following steps:

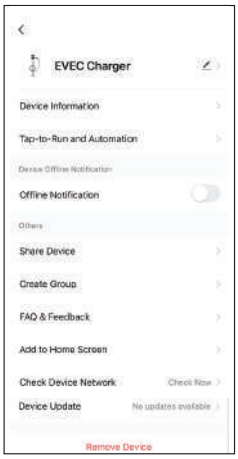

Step1: click“Share Device”.

Step2: click“Add Sharing”.

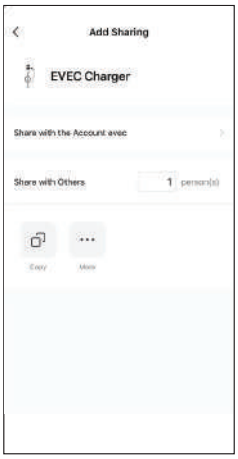

Step3: click“share with the account EVEC”.

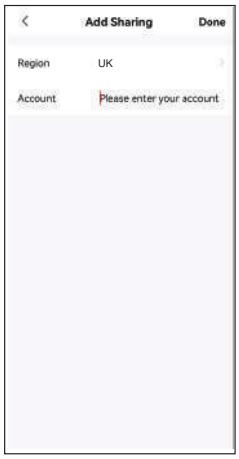

Step4: Input EVEC accunt at account.

Step5: Done.

(8). Software Update: When their is a software update available a message will appear on the APP screen to confirm the update.
(9). Remove Device
1. Disconnect: Disconnect device connection.
2. Disconnect and wipe data: Disconnect device connection and wipe “Charging record” and “Error Log”data .

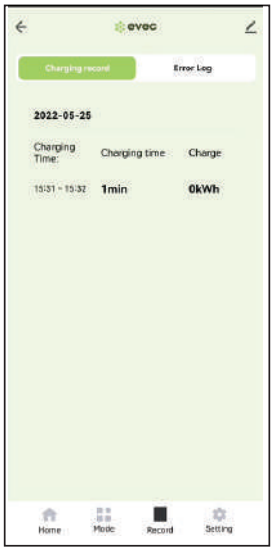

APP INSTRUCTION

13 Charging mode

(1).manual mode:control charger by Enable and Turn off charger on APP.
(2).Schedule: Timed charging.

NOTE1: When you choose the set time point to turn on the charging , you must adjust the hours setting, otherwise the default charging time is only 1 minute;
NOTE2: When you choose the set time point to turn off the charging, there is no hours setting;
NOTE3: When you choose the date choose, this time of each week will default to on or off charging.

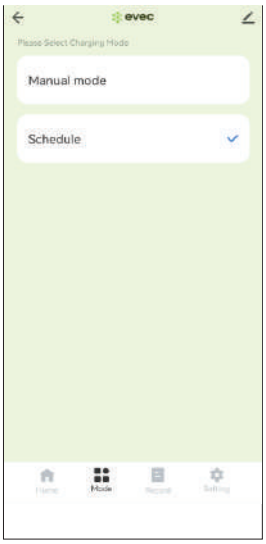

Charging mode

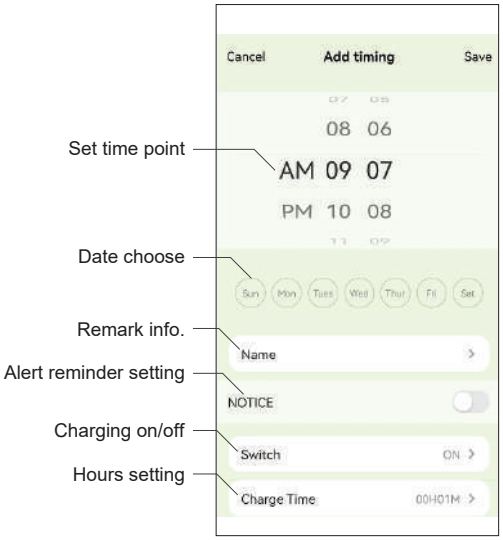

Charging mode

14 Record

You can view “Charging record” and “Power” on this interface.
NOTE:Only the information that is turned on or off through the APP will be recorded in the charging record.
When the charging is turned on by the function button, there is no charging record.

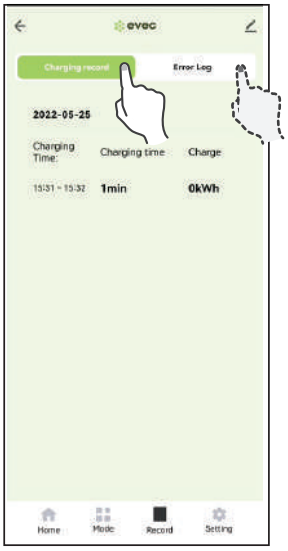

Record

APP INSTRUCTION

15 Setting

(1). Order input: Input order tab.
you can set power management from this tab. To use this function a CT clamp is required. To set maximum current:
1. Click Input order tab to enter command input field.
2. Input "home value", this value is the limited protection value of household entry current, the setting range is 08-120, and the factory default setting is 45A (the system will automatically optimize the current value when the actual value is 5A less than the value set); the setting value is recommended to be set according to the rated current value of the total household current.

(2). Set Current tab(A): You can set max charging current, max charging current not more than the current of DIP switch setting.
NOTE1: After the APP is connected at the first time, the current value displayed here is not the set current value, it is a current setting form.
NOTE2: It will take effect only after clicking to enter to set any current value, and the current value adjustment range is 6-32A;
NOTE3: If the current value has never been set here, the value displayed here is invalid.

(3). Temperature Monitor: can check device interior temperature value.

(4). IP Address: Change the address of the OCPP back-office server;

(5). ID: The product name in the OCPP back-office server.
NOTE1: make sure the ID is only.
NOTE2: After the ID is replaced, it can be concluded that the ID replacement is complete only when the Device number is consistent with the replaced ID;
If the Device number does not change after changing the ID, you can exit the APP and then power off and restart the EV charger.
NOTE3: After the IP or ID is replaced, it must be powered off and restarted to take effect.

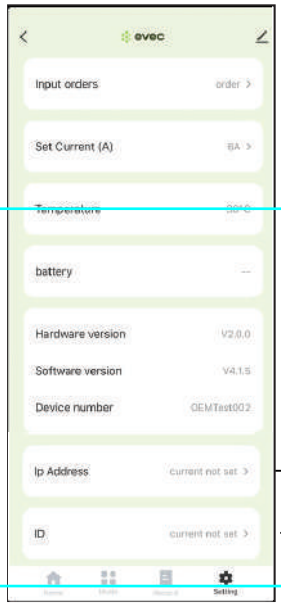

Setting

Input order	Function
HOME value	Set household entry current
RESET	Clear all charging data

NOTE: If the order is inputed incorrectly, the device will still beep twice, but the order will not be executed;
The wrong order that was inputed cannot be corrected, until you disconnect device from the APP and wipe the data and connect it again.

URL

Charger ID

FAULT INTERFACE

If device has fault, you can view the cause of the failure in the center of the main interface of the APP.

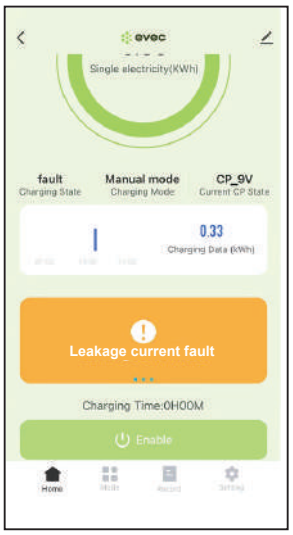

For Customer Services & Spare Parts please call 0161 249 6780
Opening times: Monday - Friday 8am – 5pm

MAINTENANCE

The charger enclosure does NOT need to be opened for routine maintenance tasks.

1. Regularly clean the external surfaces of the equipment with a damp cloth
In order to avoid damaging the surface smoothness, do not clean the internal parts with soluble substances and alcohol.
2. Regularly inspect the exterior of the equipment for visual damage, if damage affects safety, isolate the equipment and prevent its use until appropriate repairs have been completed.
3. Once a year, the charger and switchgear (if installed) should be electrically inspected by an appropriately qualified electrician in accordance with the current legislation for the installation location. A record of the tests and results must be kept.

TROUBLESHOOTING

Red light flashing	One fast, two slow	CP fault
	Two fast, two slow	Leakage current fault
	Two fast, one slow	Over current
	Three fast, one slow	Leakage current fault
	Three fast, two slow	Under voltage fault
	Four fast, one slow	Over voltage fault
	Six fast, two slow	Adhesion fault
	Seven fast, one slow	Earth fault
	Red light glowing	Over temperature

evec
for everyone

Unit 8 Longbridge Rd Fourways Trading Estate
M17 1SW

Product Disposal
In accordance with European Directive 2002/96/EC on waste electrical and electronic equipment and its implementation in national law, used electrical devices must be collected separately and recycled in an environmentally responsible manner. Ensure you return your used device to your dealer or obtain information regarding a local, authorised collection and disposal system. Failure to comply with this EU Directive may result in a negative impact on the environment.

USE MANUAL PICTURES JUST AS REFERENCE ONLY, DETAILS SUBJECT TO ACTUAL PRODUCT.

Cod: 0030300112-B