A1

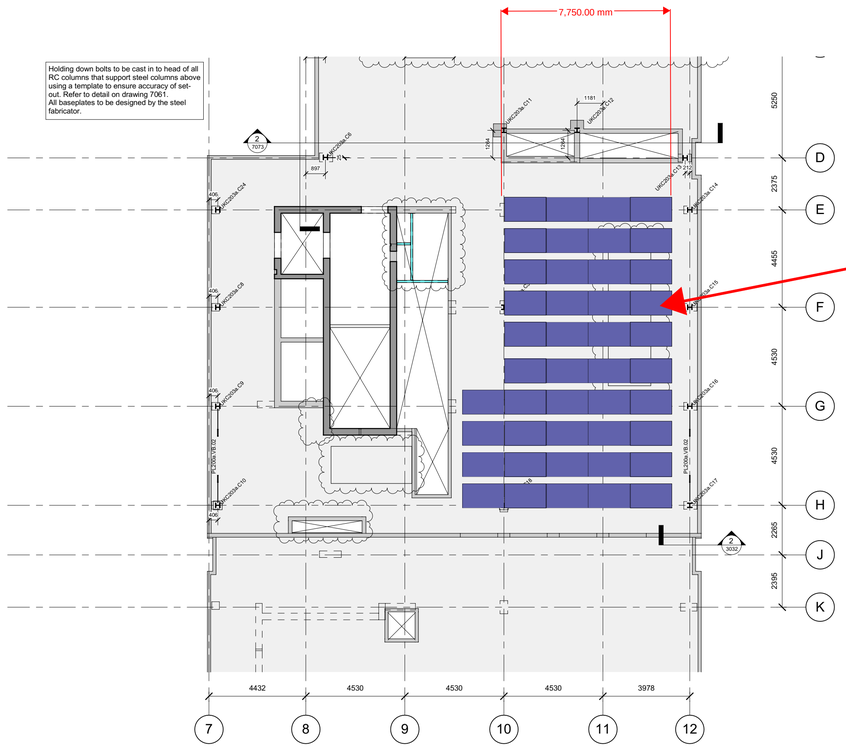

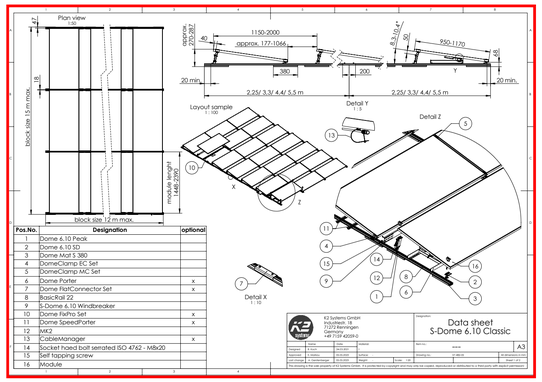

Pos.No.	Designation	optional
1	Dome 6.10 Peak	
2	Dome 6.10 SD	
3	Dome Mat S 380	
4	DomeClamp EC Set	
5	DomeClamp MC Set	
6	Dome Porter	x
7	Dome RailConnector Set	x
8	BasicRail 22	
9	S-Dome 6.10 Windbreaker	
10	Dome FixPro Set	x
11	Dome SpeedPorter	x
12	MK2	
13	CableManager	x
14	Socket head bolt serrated ISO 4762 - M8x20	
15	Self tapping screw	
16	Module	

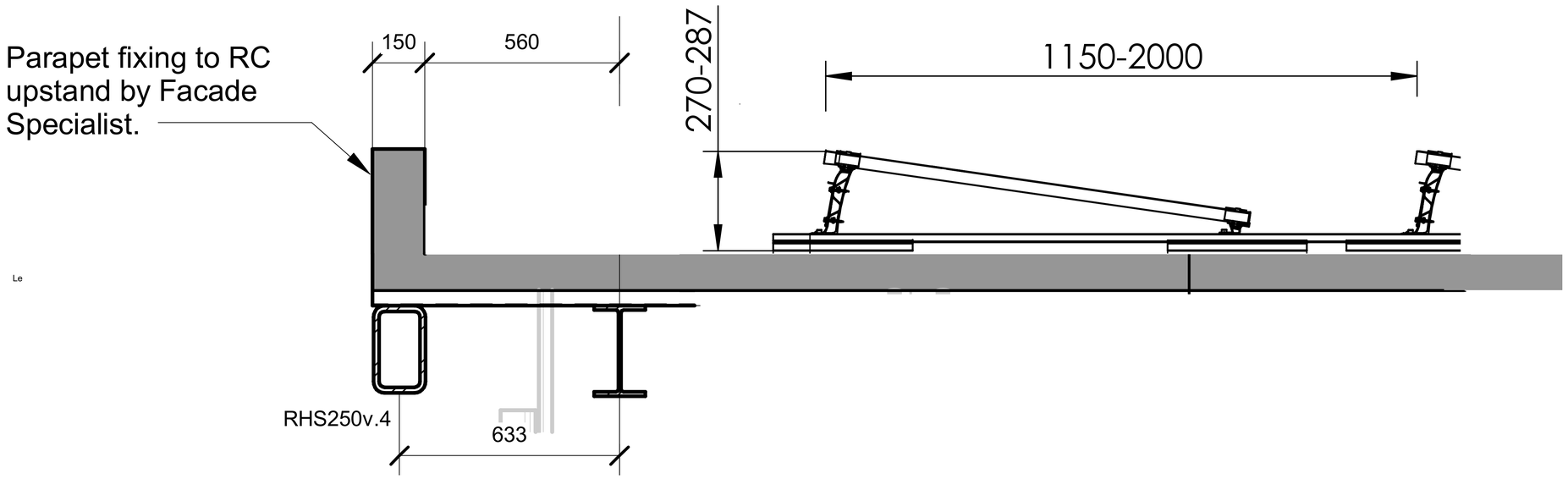

Le

Do not scale

Notes

1. For General Notes refer to drawing MMT-ARU-DE-SE-XX-ZZ-0001.

2. This drawings shall be read in conjunction with all other project drawings and documents.

3. Information based on Revit models:
MMT-AAM-ZZ-ZZ-M3-AR-0001 (29-01-2019)
MMT-AAM-ZZ-ZZ-M3-AR-0002 (29-01-2019)

4. All proprietary systems and fixings, such as reinforcment continuity starter boxes and resin fixed anchors, to be installed strictly in accordance with manufacturers recommendations.

5. Steelwork connections to concrete frame to be typically formed with cast in proprietary fixing systems to ensure coordination with rebar. Any post fixed resin anchors will need to be coordinated around rebar.

6. Slab edge setting out and secondary steelwork requirements at facade interfaces are subject to confirmation pending development of facade connection details with the appointed Cladding Contractor.

7. Composite slabs on metal decking and profiled roof decking are both assumed to be continuous over at least one internal beam where steel framing arrangement allows.

8. RC slab design and details by Bamtec.

9. For shear stud details refer to steel beam schedule.

10. For composite slab reinforcement refer to 8900 drawing series for general arrangement and typical details.

Key

Indicates span of composite metal deck slab on Kingspan MD50 (1.0 gauge). Thickness of slab varies (see plan).

Indicates Moment connection.

Indicates span of structural roof deck SMD SR60+ (1.2mm gauge) with lightweight build-up to architects details. Drainage gradient achieved with tapered insulation.

* Indicates beam with penetrations. Refer to MMT-ARU-ZZ-ZZ-DR-SE-7091, 7092 & 7093

** Indicates location of cast in plate or steel-to-concrete connection to steel fabricator's design. For details refer to MMT-ARU-ZZ-ZZ-DR-SE-7041 to 7046.

Indicates two-way spanning reinforced concrete flat slab. Thickness varies (see plan).

This drawing is the Final Construction Issue for inclusion in the Operation and Maintenance Manual. The drawing should represent the finished works on site and incorporates comments from the Site Engineer where received. However it is possible the Main Contractor or Sub-Contractors may have carried out alterations, or amended details without Arup's knowledge. Any persons carrying out future works should consult with the Main Contractor to verify as-built structure and information.

Rev	Date	By	Chkd	Appd
C5	07/02/20	NB	SS	GH
Final Construction Issue				
C4	20/07/18	WH	SS	GH
Issued For Construction Updates As Clouded				
C3	25/06/18	WH	SS	GH
Issued For Construction Updates As Clouded				

ARUP

6th Floor, 3 Piccadilly Place,
Manchester, M1 3BN
Tel +44(0)161 228 2331 Fax +44(0)161 236 105
www.arup.com

Client
Manchester Metropolitan University

Project Title
Arts & Humanities Project

Drawing Title
Level 06
Enlarged Steel Plan

Scale at A1

Role: Structural

Suitability: CR - Construction Record

Arup Job No: 257918

Rev: C5

Name: MMT-ARU-ZZ-06-DR-SE-2082

07/02/2020 15:35:29

© Arup