SAFETY AT THE HIGHEST LEVEL

KeeGuard
Technical Datasheet Pack

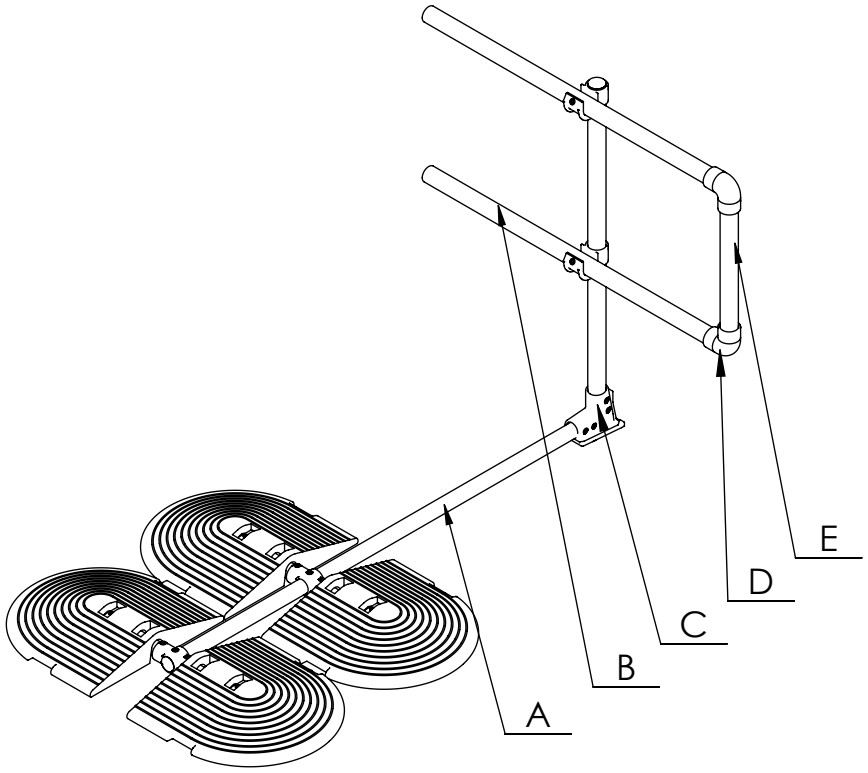

Revision 6

Issued June 2017

Technical Datasheet No: 0001

TYPICAL KEEGUARD EDGE PROTECTION SYSTEM LAYOUT TO EN 13374 & 14122-3

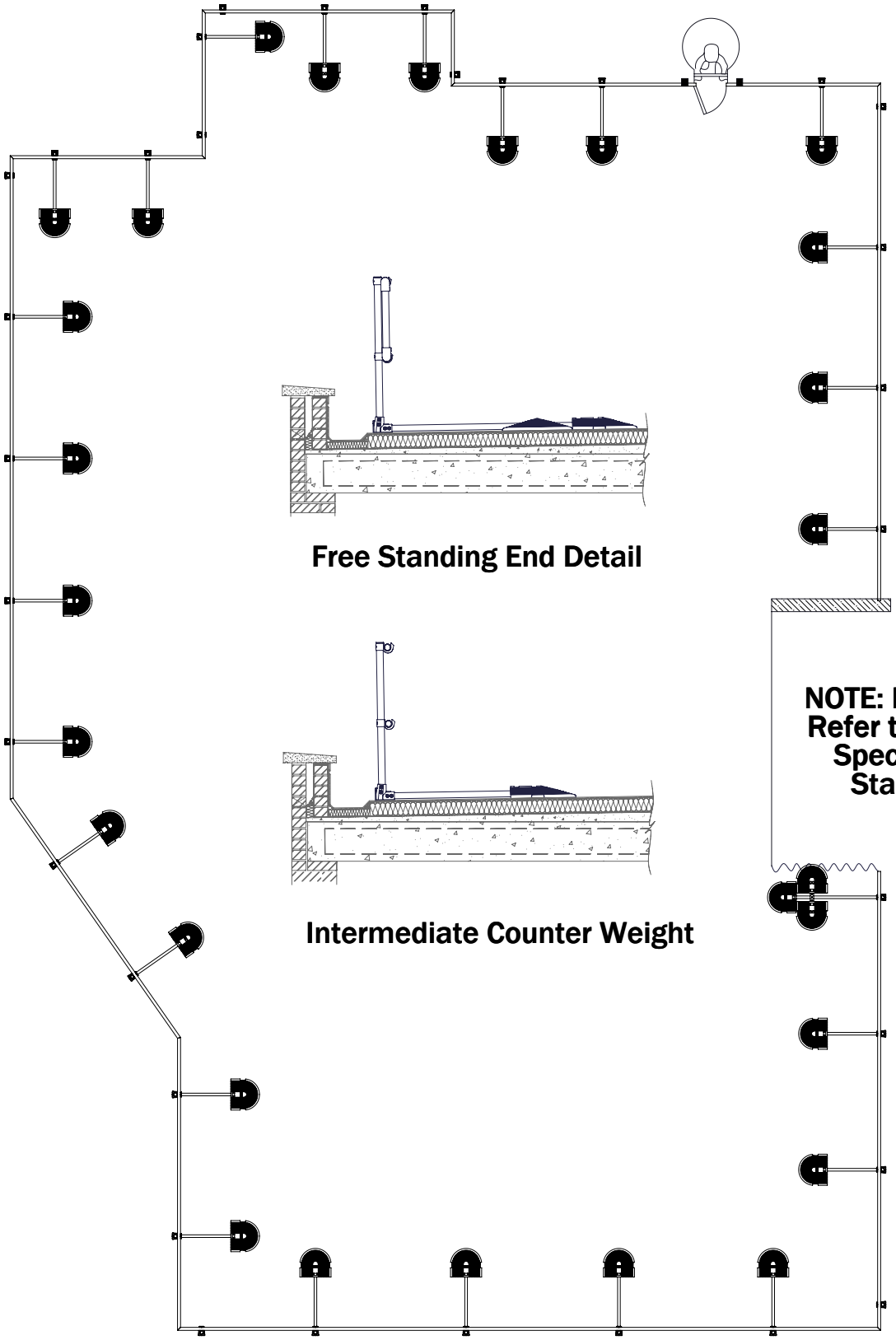

NOTE: End Detail Refer to Product Specifcation Standard!

SYSTEM SPECIFICATION

Material	
Finish	
Weight	

Issue Date: 05/06/2017

Issue No: 3

Technical Datasheet No: 0002

KEEGUARD UNRESTRAINED "D" RETURN DETAIL

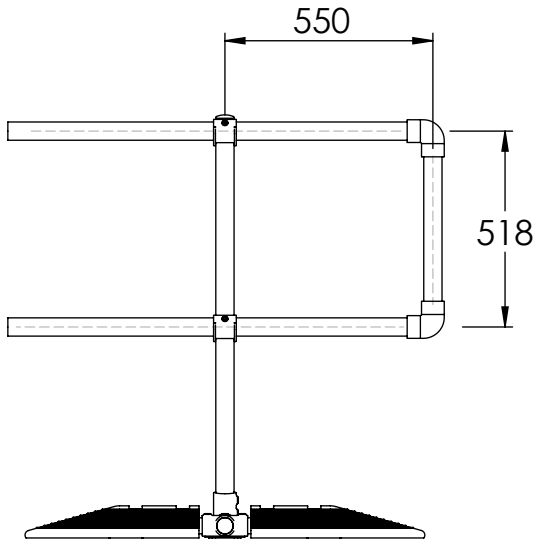

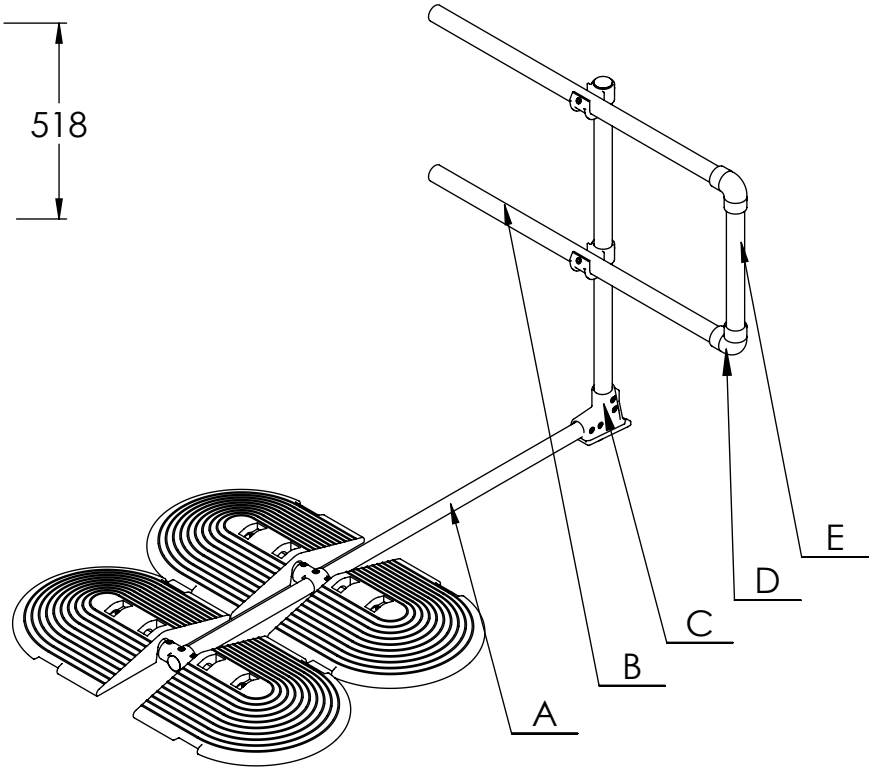

ITEM NO.	PART NO.	DESCRIPTION	QTY.	LENGTH
A	KGA404010	CB4P KEEGUARD FREE END C/B PVC	1	
B	TUBE SIZE 8	TUBE 8 - 2 - G	2	1100
C	KGU35	KGU35 KEEGUARD UPRIGHT ASSEMBLY NON CHIPPING ROOF	1	
D	001580010	15-8 90° ELBOW	2	
E	TUBE SIZE 8	TUBE 8 - 2 - G	1	468

APPLICATION

All systems consist of galvanised/aluminium tubing joined together using the KEE KLAMP method of connection. KEEGUARD, raked, radiused and folding systems' base feet connect to the 100% recycled PVC counter weight, giving the system its strength & stability.

COMPONENT SPECIFICATION

Material	Carbon Steel / Malleable Cast Iron / PVC
Finish	Galvanised to BS EN ISO 1461 / Natural
Weight	

Technical Datasheet No: 0003

CB1P KEEGUARD INTERMEDIATE C/B ASSEMBLY PVC

Part No: KGA401010

Short Part No: CB1P

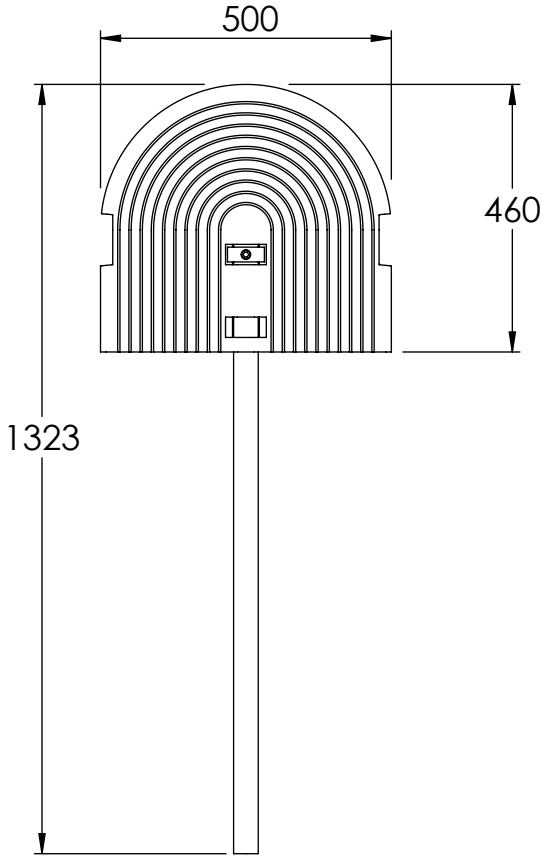

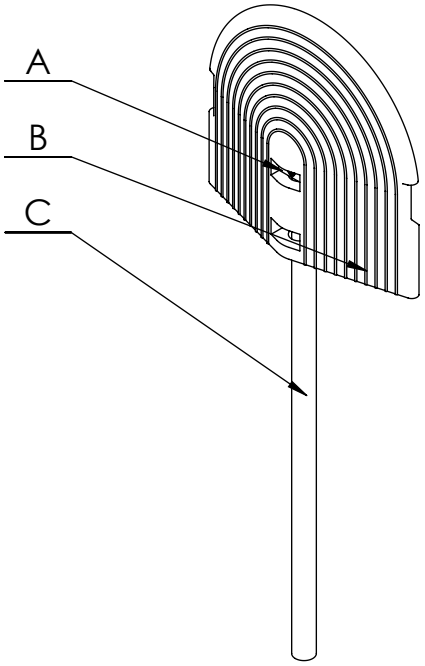

ITEM NO.	PART NO.	DESCRIPTION	QTY.	LENGTH
A	007470010	74-7 COLLAR	1	
B	044070180	440-7 COUNTER BALANCE WEIGHT	1	
C	KGA417210	CBT1 - TUBE 7 - 2 - G @ 1075mm x 3,2mm	1	1075

APPLICATION

The recycled PVC weights used with KEEGUARD bring a number of advantages to the system and particularly make installation quicker and easier thus saving both time and money. Size: 460 x 500 x 85mm, 13.5kg per weight. Carrying handles moulded into the design. Available in black as standard. Moulded surface to improve grip. Environmentally friendly. Made from 100% recycled material in the EU.

COMPONENT SPECIFICATION

Material	Carbon Steel / Malleable Cast Iron / PVC
Finish	Galvanised to BS EN ISO 1461 / Natural
Weight	

Technical Datasheet No: 0004

CB2P KEEGUARD FREE END C/B PVC

Part No: KGA402010

Short Part No: CB2P

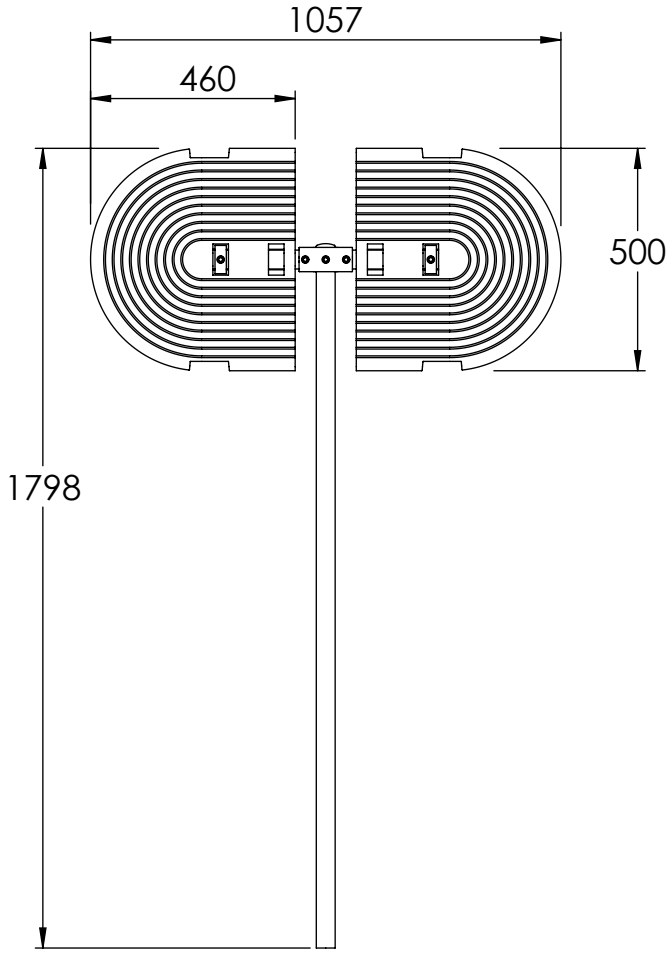

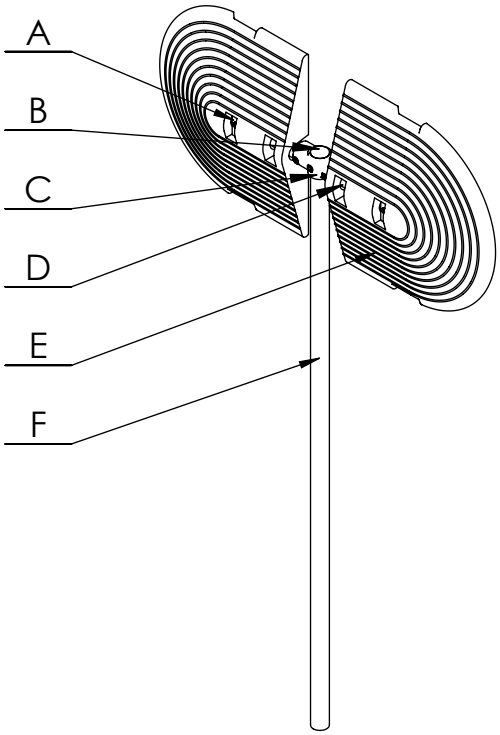

ITEM NO.	PART NO.	DESCRIPTION	QTY.	LENGTH
A	007470010	74-7 COLLAR	2	
B	007770040	77-7 PLASTIC PLUG	1	
C	002670010	26-7 TWO SOCKET CROSS	1	
D	KGA437210	CBT3 - TUBE 7 - 2 - G @ 260mm x 3,2mm	2	260
E	044070180	440-7 COUNTER BALANCE WEIGHT	2	
F	KGA427210	CBT2 - TUBE 7 - 2 - G @ 1575mm x 3,2mm	1	1575

APPLICATION

The recycled PVC weights used with KEEGUARD bring a number of advantages to the system and particularly make installation quicker and easier thus saving both time and money. Size: 460 x 500 x 85mm, 13.5kg per weight. Carrying handles moulded into the design. Available in black as standard. Moulded surface to improve grip. Environmentally friendly. Made from 100% recycled material in the EU.

COMPONENT SPECIFICATION

Material	Carbon Steel / Malleable Cast Iron / PVC
Finish	Galvanised to BS EN ISO 1461 / Natural
Weight	

Technical Datasheet No: 0005

CB2PR KEEGUARD INTERMEDIATE C/B ASSEMBLY PVC

Part No: KGA409010

Short Part No: CB2PR

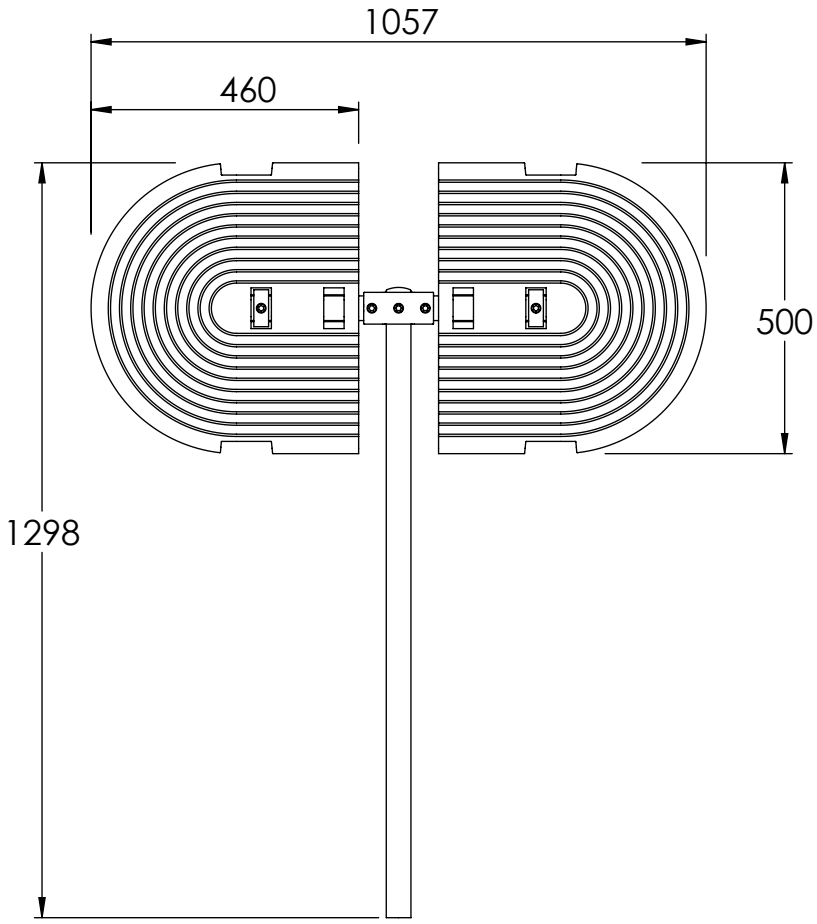

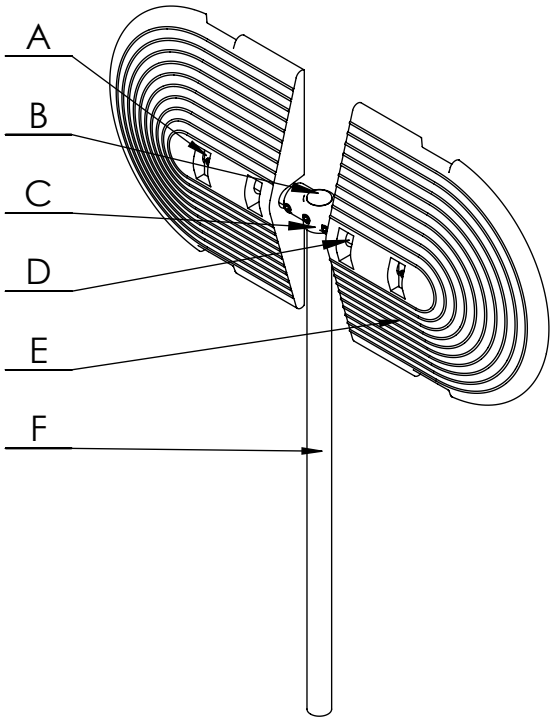

ITEM NO.	PART NO.	DESCRIPTION	QTY.	LENGTH
A	007470010	74-7 COLLAR	2	
B	007770040	77-7 PLASTIC PLUG	1	
C	002670010	26-7 TWO SOCKET CROSS	1	
D	KGA437210	CBT3 - TUBE 7 - 2 - G @ 260mm x 3,2mm	2	260
E	044070180	440-7 COUNTER BALANCE WEIGHT	2	
F	KGA417210	CBT1 - TUBE 7 - 2 - G @ 1075mm x 3,2mm	1	1075

APPLICATION

The recycled PVC weights used with KEEGUARD bring a number of advantages to the system and particularly make installation quicker and easier thus saving both time and money. Size: 460 x 500 x 85mm, 13.5kg per weight. Carrying handles moulded into the design. Available in black as standard. Moulded surface to improve grip. Environmentally friendly. Made from 100% recycled material in the EU.

COMPONENT SPECIFICATION

Material	Carbon Steel / Malleable Cast Iron / PVC
Finish	Galvanised to BS EN ISO 1461 / Natural
Weight	

Issue Date: 30/05/2017 Issue No: 2

Technical Datasheet No: 0006

CB2Po KEEGUARD FREE END C/B PVC

Part No: KGA442010

Short Part No: CB2Po

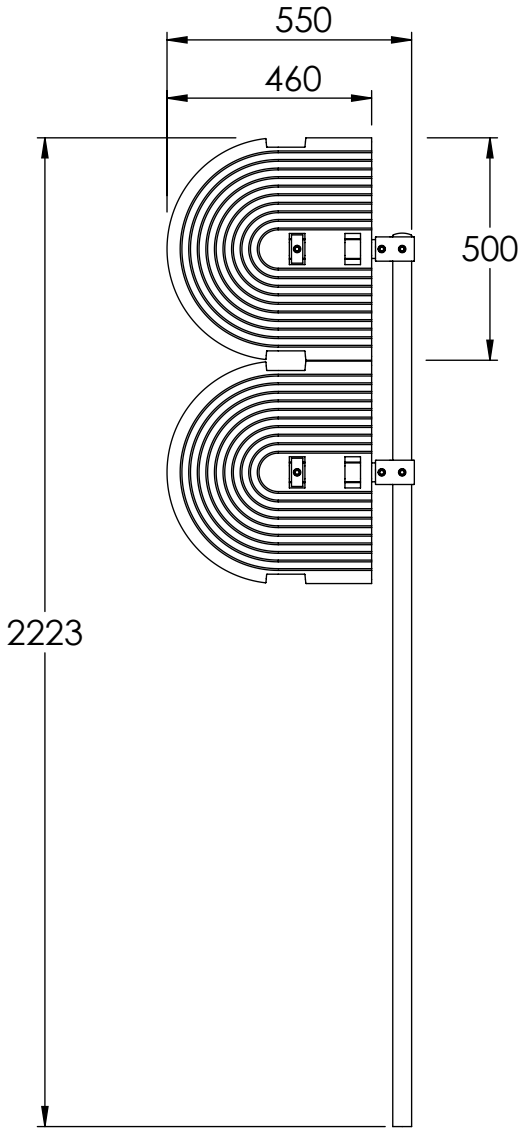

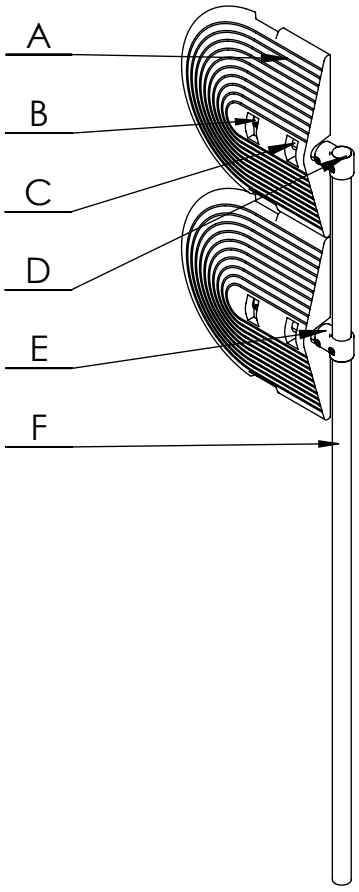

ITEM NO.	PART NO.	DESCRIPTION	QTY.	LENGTH
A	044070180	440-7 COUNTER BALANCE WEIGHT	2	
B	007470010	74-7 COLLAR	2	
C	KGA437210	CBT3 - TUBE 7 - 2 - G @ 260mm x 3,2mm	2	260
D	007770040	77-7 PLASTIC PLUG	1	
E	001070010	10-7 SINGLE SOCKET TEE	2	
F	KGA2E7210	CBTE - TUBE 7 - 2 - G @ 2000mm x 3,2mm	1	2000

APPLICATION

The recycled PVC weights used with KEEGUARD bring a number of advantages to the system and particularly make installation quicker and easier thus saving both time and money. Size: 460 x 500 x 85mm, 13.5kg per weight. Carrying handles moulded into the design. Available in black as standard. Moulded surface to improve grip. Environmentally friendly. Made from 100% recycled material in the EU.

COMPONENT SPECIFICATION

Material	Carbon Steel / Malleable Cast Iron / PVC
Finish	Galvanised to BS EN ISO 1461 / Natural
Weight	

Technical Datasheet No: 0007

CB2PS KEEGUARD INTERMEDIATE C/B PVC

Part No: KGA442210

Short Part No: CB2PS

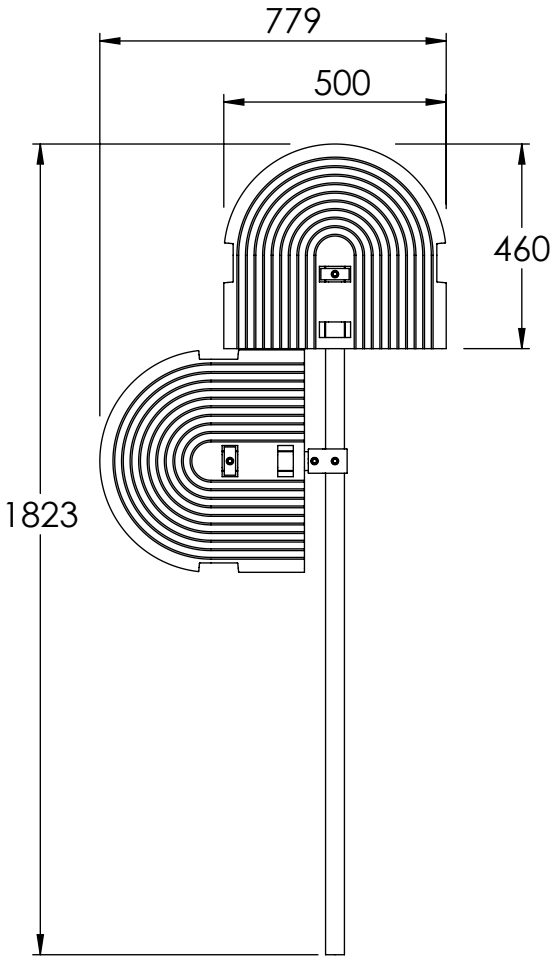

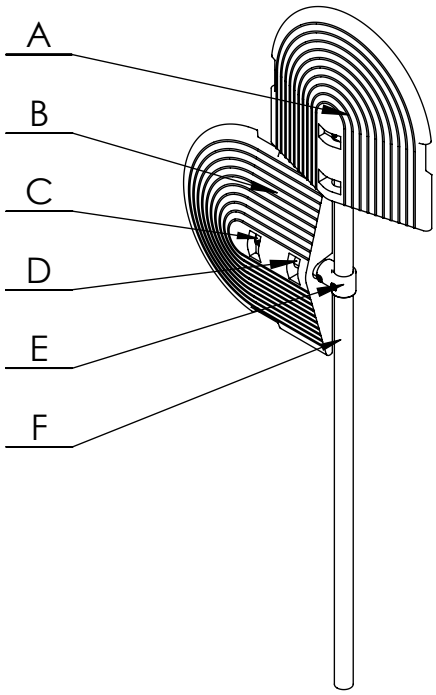

ITEM NO.	PART NO.	DESCRIPTION	QTY.	LENGTH
A	007770040	77-7 PLASTIC PLUG	1	
B	044070180	440-7 COUNTER BALANCE WEIGHT	2	
C	007470010	74-7 COLLAR	2	
D	KGA437210	CBT3 - TUBE 7 - 2 - G @ 260mm x 3,2mm	1	260
E	001070010	10-7 SINGLE SOCKET TEE	1	
F	KGA427210	CBT2 - TUBE 7 - 2 - G @ 1575mm x 3,2mm	1	1575

APPLICATION

The recycled PVC weights used with KEEGUARD bring a number of advantages to the system and particularly make installation quicker and easier thus saving both time and money. Size: 460 x 500 x 85mm, 13.5kg per weight. Carrying handles moulded into the design. Available in black as standard. Moulded surface to improve grip. Environmentally friendly. Made from 100% recycled material in the EU.

COMPONENT SPECIFICATION

Material	Carbon Steel / Malleable Cast Iron / PVC
Finish	Galvanised to BS EN ISO 1461 / Natural
Weight	

Technical Datasheet No: 0008

CB3P KEEGUARD FREE END C/B PVC

Part No: KGA403010

Short Part No: CB3P

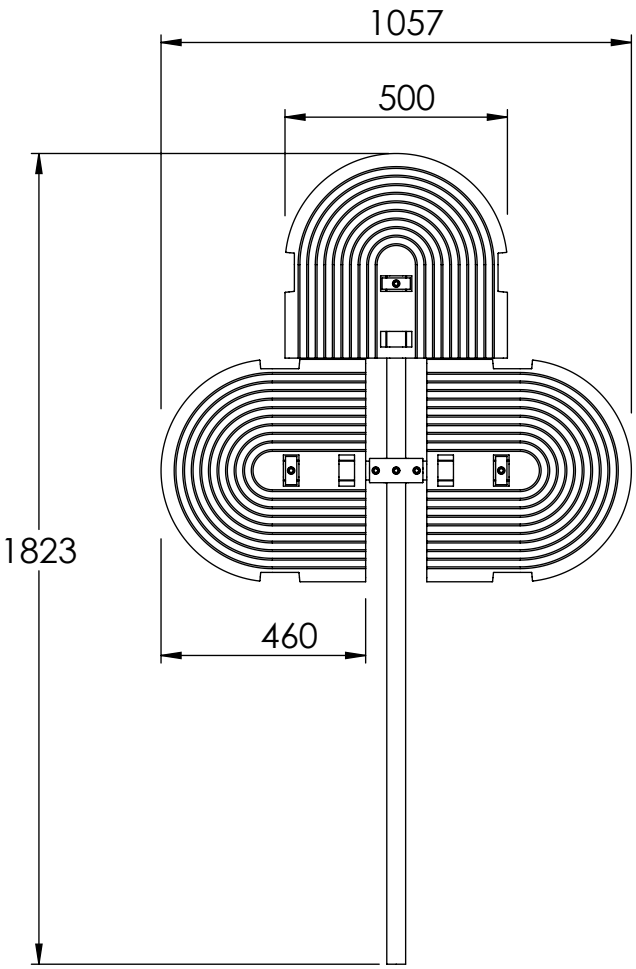

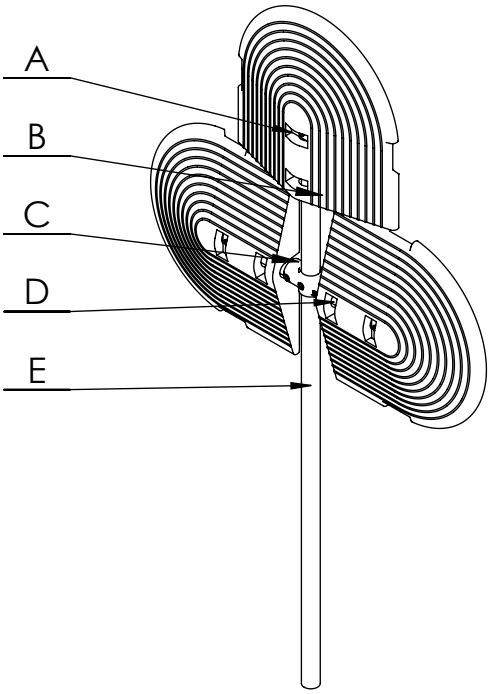

ITEM NO.	PART NO.	DESCRIPTION	QTY.	LENGTH
A	007470010	74-7 COLLAR	3	
B	044070180	440-7 COUNTER BALANCE WEIGHT	3	
C	002670010	26-7 TWO SOCKET CROSS	1	
D	KGA437210	CBT3 - TUBE 7 - 2 - G @ 260mm x 3,2mm	2	260
E	KGA427210	CBT2 - TUBE 7 - 2 - G @ 1575mm x 3,2mm	1	1575

APPLICATION

The recycled PVC weights used with KEEGUARD bring a number of advantages to the system and particularly make installation quicker and easier thus saving both time and money. Size: 460 x 500 x 85mm, 13.5kg per weight. Carrying handles moulded into the design. Available in black as standard. Moulded surface to improve grip. Environmentally friendly. Made from 100% recycled material in the EU.

COMPONENT SPECIFICATION

Material	Carbon Steel / Malleable Cast Iron / PVC
Finish	Galvanised to BS EN ISO 1461 / Natural
Weight	

Technical Datasheet No: 0009

CB3PR KEEGUARD INTERMEDIATE C/B PVC

Part No: KGA408010

Short Part No: CB3PR

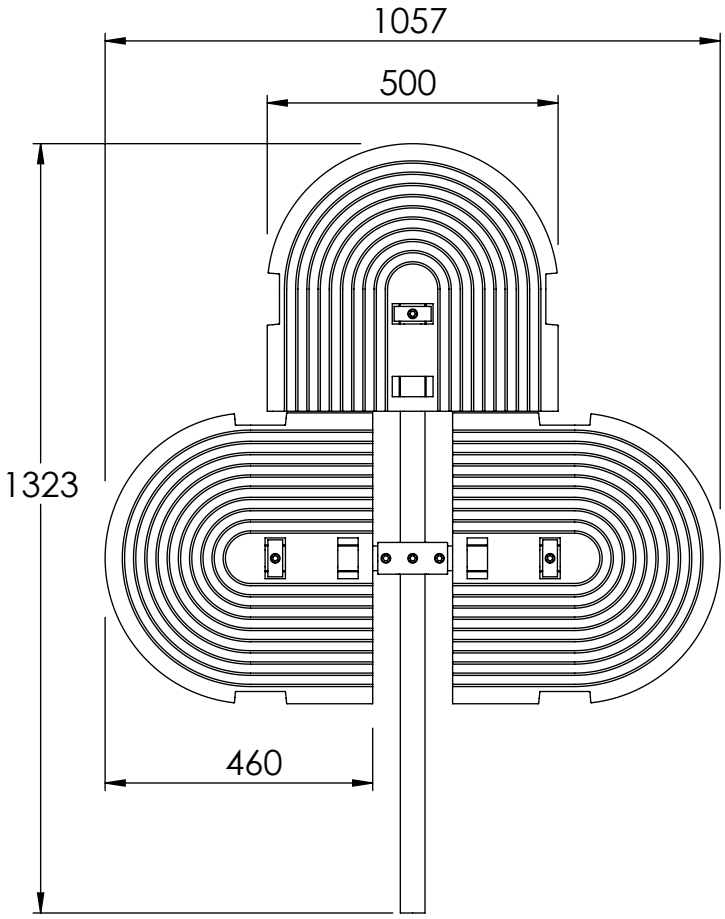

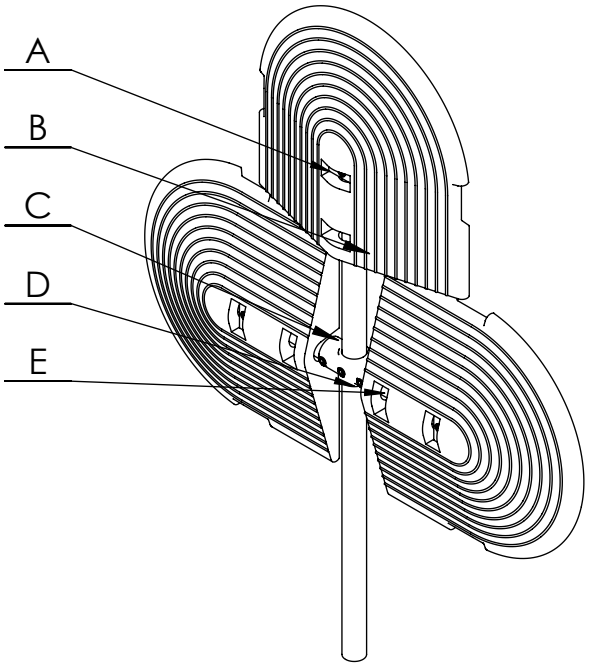

ITEM NO.	PART NO.	DESCRIPTION	QTY.	LENGTH
A	007470010	74-7 COLLAR	3	
B	044070180	440-7 COUNTER BALANCE WEIGHT	3	
C	002670010	26-7 TWO SOCKET CROSS	1	
D	KGA417210	CBT1 - TUBE 7 - 2 - G @ 1075mm x 3,2mm	1	1075
E	KGA437210	CBT3 - TUBE 7 - 2 - G @ 260mm x 3,2mm	2	260

APPLICATION

The recycled PVC weights used with KEEGUARD bring a number of advantages to the system and particularly make installation quicker and easier thus saving both time and money. Size: 460 x 500 x 85mm, 13.5kg per weight. Carrying handles moulded into the design. Available in black as standard. Moulded surface to improve grip. Environmentally friendly. Made from 100% recycled material in the EU.

COMPONENT SPECIFICATION

Material	Carbon Steel / Malleable Cast Iron / PVC
Finish	Galvanised to BS EN ISO 1461 / Natural
Weight	

Technical Datasheet No: 0010

CB4P KEEGUARD FREE END C/B PVC

Part No: KGA404010

Short Part No: CB4P

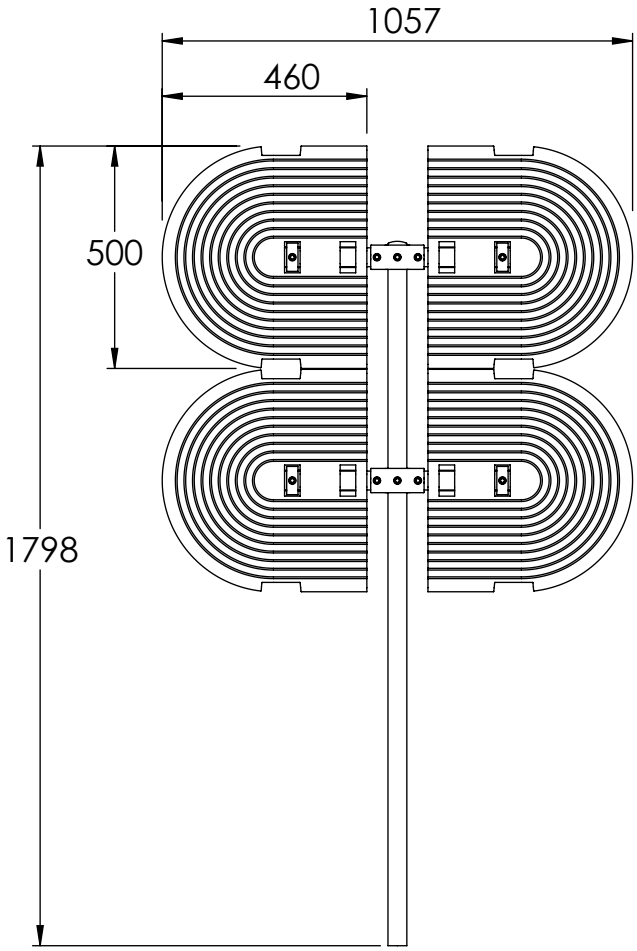

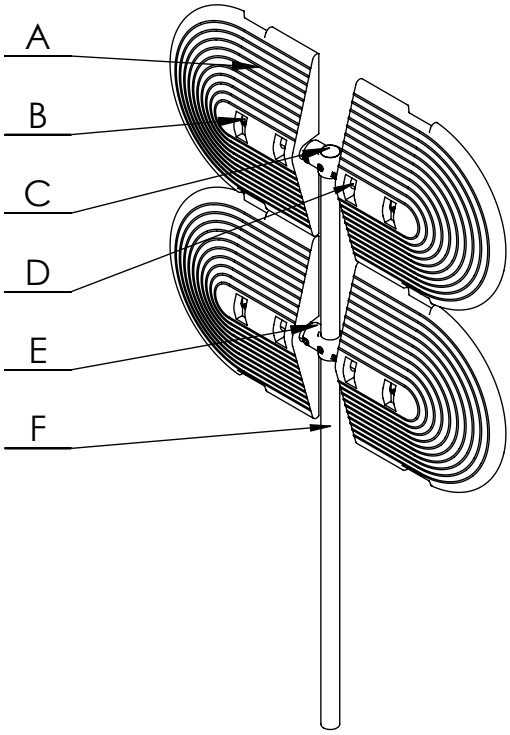

ITEM NO.	PART NO.	DESCRIPTION	QTY.	LENGTH
A	044070180	440-7 COUNTER BALANCE WEIGHT	4	
B	007470010	74-7 COLLAR	4	
C	007770040	77-7 PLASTIC PLUG	1	
D	KGA437210	CBT3 - TUBE 7 - 2 - G @ 260mm x 3,2mm	4	260
E	002670010	26-7 TWO SOCKET CROSS	2	
F	KGA427210	CBT2 - TUBE 7 - 2 - G @ 1575mm x 3,2mm	1	1575

APPLICATION

The recycled PVC weights used with KEEGUARD bring a number of advantages to the system and particularly make installation quicker and easier thus saving both time and money. Size: 460 x 500 x 85mm, 13.5kg per weight. Carrying handles moulded into the design. Available in black as standard. Moulded surface to improve grip. Environmentally friendly. Made from 100% recycled material in the EU.

COMPONENT SPECIFICATION

Material	Carbon Steel / Malleable Cast Iron / PVC
Finish	Galvanised to BS EN ISO 1461 / Natural
Weight	

Technical Datasheet No: 0011

CB4PR KEEGUARD INTERMEDIATE C/B PVC

Part No: KGA404110

Short Part No: CB4PR

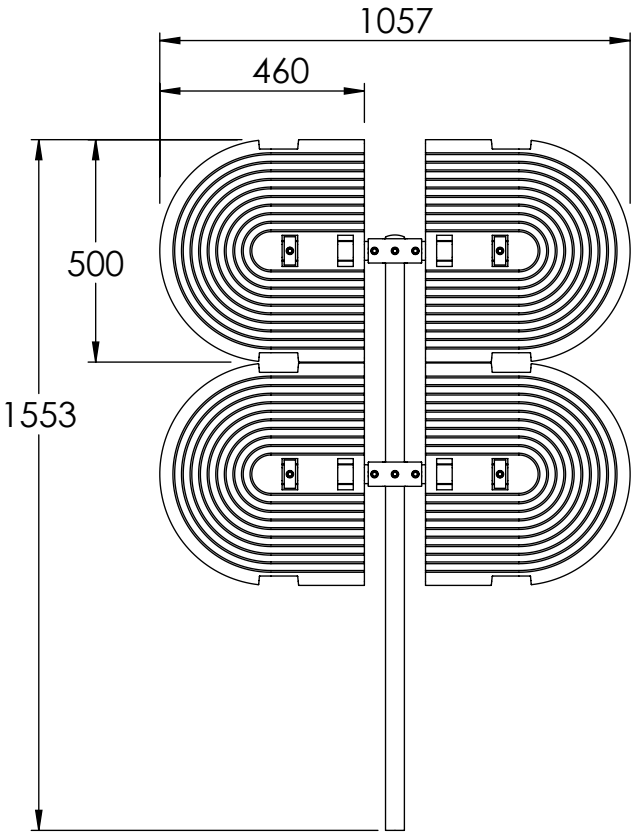

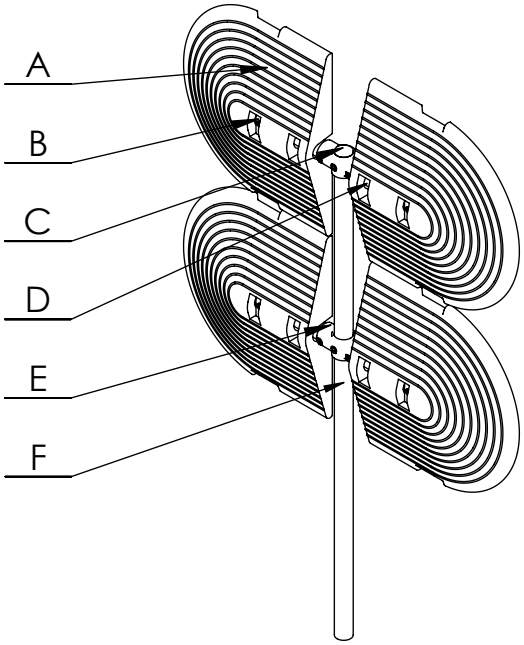

ITEM NO.	PART NO.	DESCRIPTION	QTY.	LENGTH
A	044070180	440-7 COUNTER BALANCE WEIGHT	4	
B	007470010	74-7 COLLAR	4	
C	007770040	77-7 PLASTIC PLUG	1	
D	KGA437210	CBT3 - TUBE 7 - 2 - G @ 260mm x 3,2mm	4	260
E	002670010	26-7 TWO SOCKET CROSS	2	
F	SIZE 7 TUBE	TUBE 7 - 2 - G @ 1330mm x 3,2mm	1	1330

APPLICATION

The recycled PVC weights used with KEEGUARD bring a number of advantages to the system and particularly make installation quicker and easier thus saving both time and money. Size: 460 x 500 x 85mm, 13.5kg per weight. Carrying handles moulded into the design. Available in black as standard. Moulded surface to improve grip. Environmentally friendly. Made from 100% recycled material in the EU.

COMPONENT SPECIFICATION

Material	Carbon Steel / Malleable Cast Iron / PVC
Finish	Galvanised to BS EN ISO 1461 / Natural
Weight	

Technical Datasheet No: 0012

CB4Po KEEGUARD FREE END C/B PVC

Part No: KGA444010

Short Part No: CB4Po

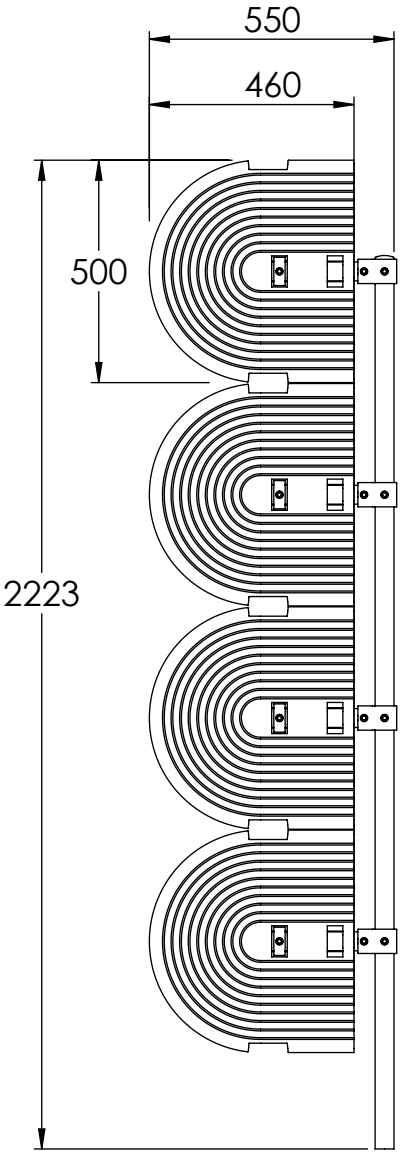

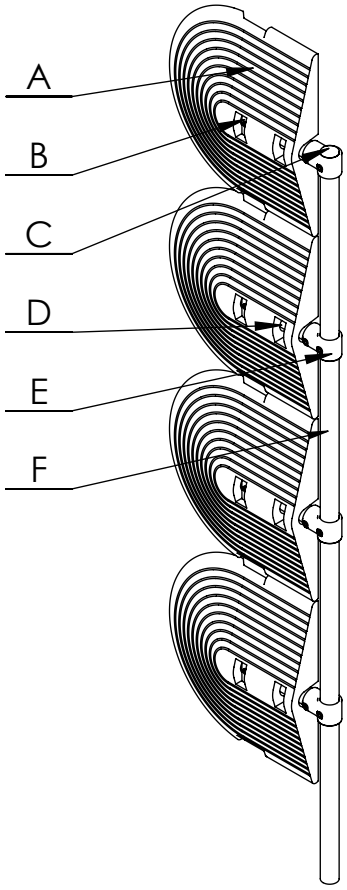

ITEM NO.	PART NO.	DESCRIPTION	QTY.	LENGTH
A	044070180	440-7 COUNTER BALANCE WEIGHT	4	
B	007470010	74-7 COLLAR	4	
C	007770040	77-7 PLASTIC PLUG	1	
D	KGA437210	CBT3 - TUBE 7 - 2 - G @ 260mm x 3,2mm	4	260
E	001070010	10-7 SINGLE SOCKET TEE	4	
F	KGA2E7210	CBTE - TUBE 7 - 2 - G @ 2000mm x 3,2mm	1	2000

APPLICATION

The recycled PVC weights used with KEEGUARD bring a number of advantages to the system and particularly make installation quicker and easier thus saving both time and money. Size: 460 x 500 x 85mm, 13.5kg per weight. Carrying handles moulded into the design. Available in black as standard. Moulded surface to improve grip. Environmentally friendly. Made from 100% recycled material in the EU.

COMPONENT SPECIFICATION

Material	Carbon Steel / Malleable Cast Iron / PVC
Finish	Galvanised to BS EN ISO 1461 / Natural
Weight	

Technical Datasheet No: 0013

CB5P KEEGUARD FREE END C/B PVC

Part No: KGA405010

Short Part No: CB5P

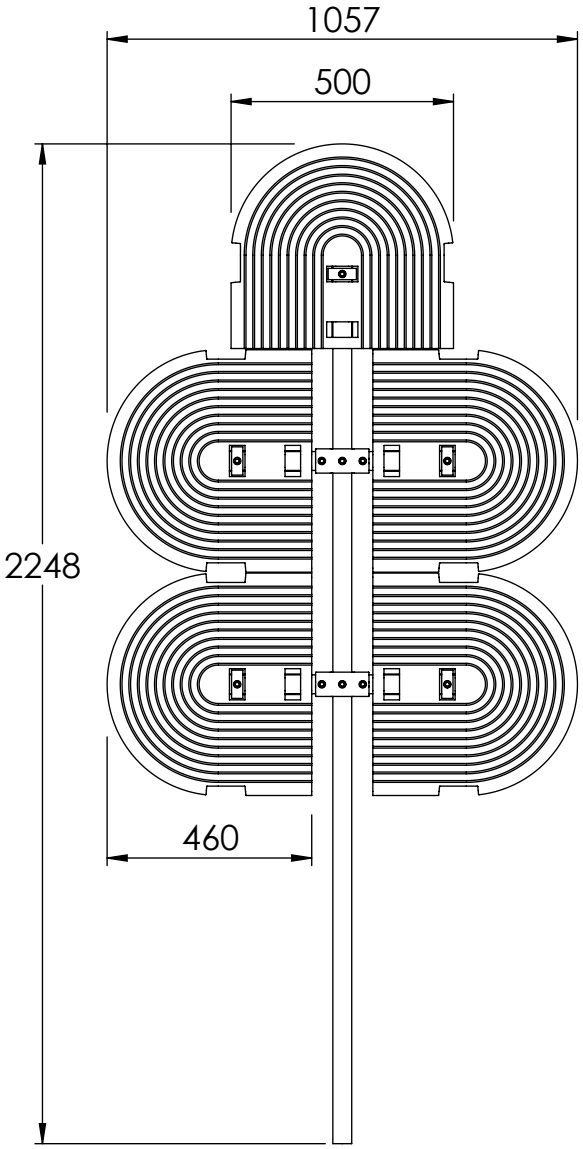

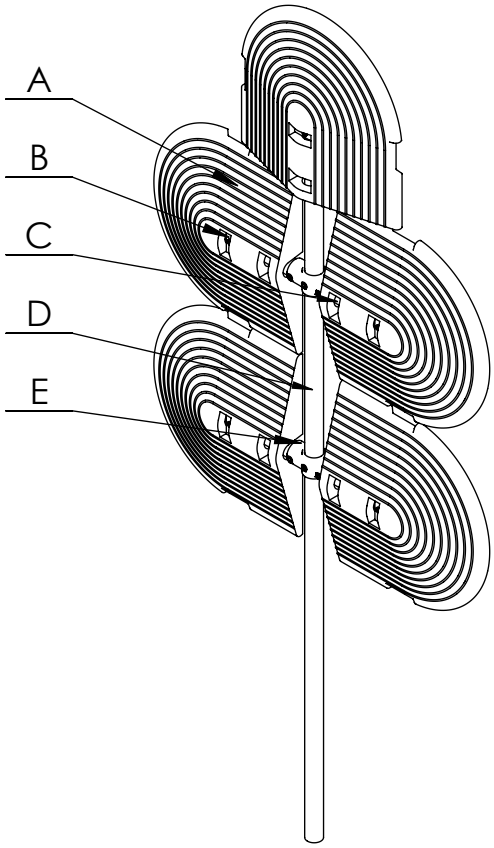

ITEM NO.	PART NO.	DESCRIPTION	QTY.	LENGTH
A	044070180	440-7 COUNTER BALANCE WEIGHT	5	
B	007470010	74-7 COLLAR	5	
C	KGA437210	CBT3 - TUBE 7 - 2 - G @ 260mm x 3,2mm	4	260
D	KGA2E7210	CBTE - TUBE 7 - 2 - G @ 2000mm x 3,2mm	1	2000
E	002670010	26-7 TWO SOCKET CROSS	2	

APPLICATION

The recycled PVC weights used with KEEGUARD bring a number of advantages to the system and particularly make installation quicker and easier thus saving both time and money. Size: 460 x 500 x 85mm, 13.5kg per weight. Carrying handles moulded into the design. Available in black as standard. Moulded surface to improve grip. Environmentally friendly. Made from 100% recycled material in the EU.

COMPONENT SPECIFICATION

Material	Carbon Steel / Malleable Cast Iron / PVC
Finish	Galvanised to BS EN ISO 1461 / Natural
Weight	

Issue Date: 30/05/2017

Issue No: 2

Technical Datasheet No: 0014

CB7P KEEGUARD FREE END C/B PVC

Part No: KGA407010

Short Part No: CB7P

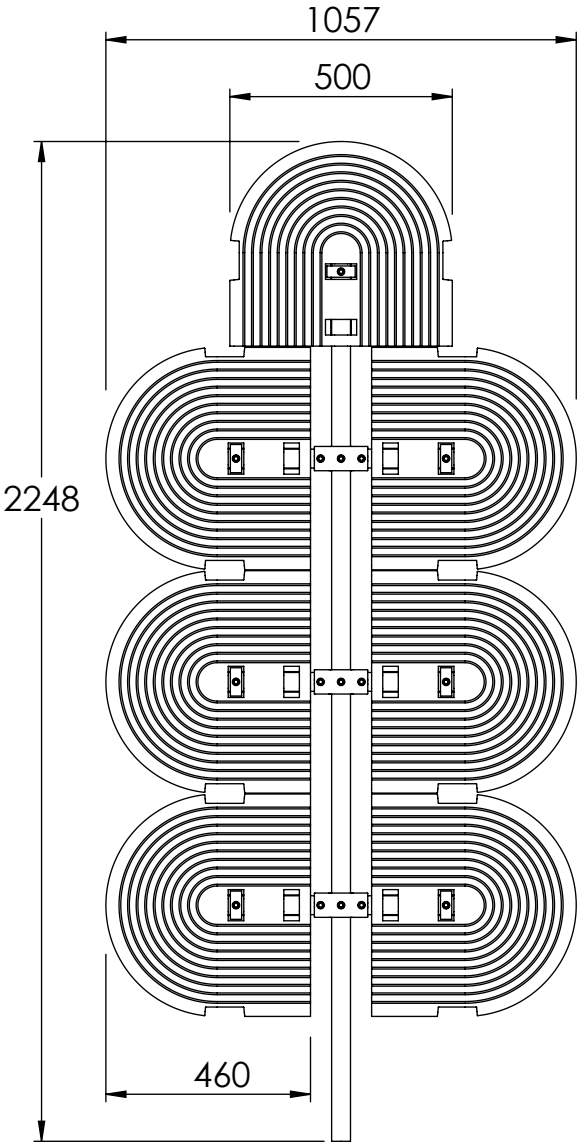

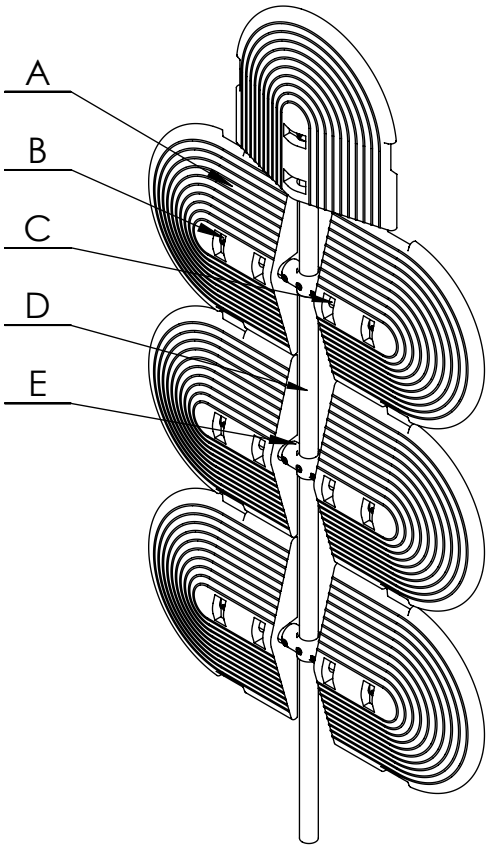

ITEM NO.	PART NO.	DESCRIPTION	QTY.	LENGTH
A	044070180	440-7 COUNTER BALANCE WEIGHT	7	
B	007470010	74-7 COLLAR	7	
C	KGA437210	CBT3 - TUBE 7 - 2 - G @ 260mm x 3,2mm	6	260
D	KGA2E7210	CBTE - TUBE 7 - 2 - G @ 2000mm x 3,2mm	1	2000
E	002670010	26-7 TWO SOCKET CROSS	3	

APPLICATION

The recycled PVC weights used with KEEGUARD bring a number of advantages to the system and particularly make installation quicker and easier thus saving both time and money. Size: 460 x 500 x 85mm, 13.5kg per weight. Carrying handles moulded into the design. Available in black as standard. Moulded surface to improve grip. Environmentally friendly. Made from 100% recycled material in the EU.

COMPONENT SPECIFICATION

Material	Carbon Steel / Malleable Cast Iron / PVC
Finish	Galvanised to BS EN ISO 1461 / Natural
Weight	

Technical Datasheet No: 0015

KGU35 KEEGUARD UPRIGHT ASSEMBLY NON CHIPPING ROOF

Part No: KGU35

Short Part No: KGA201310

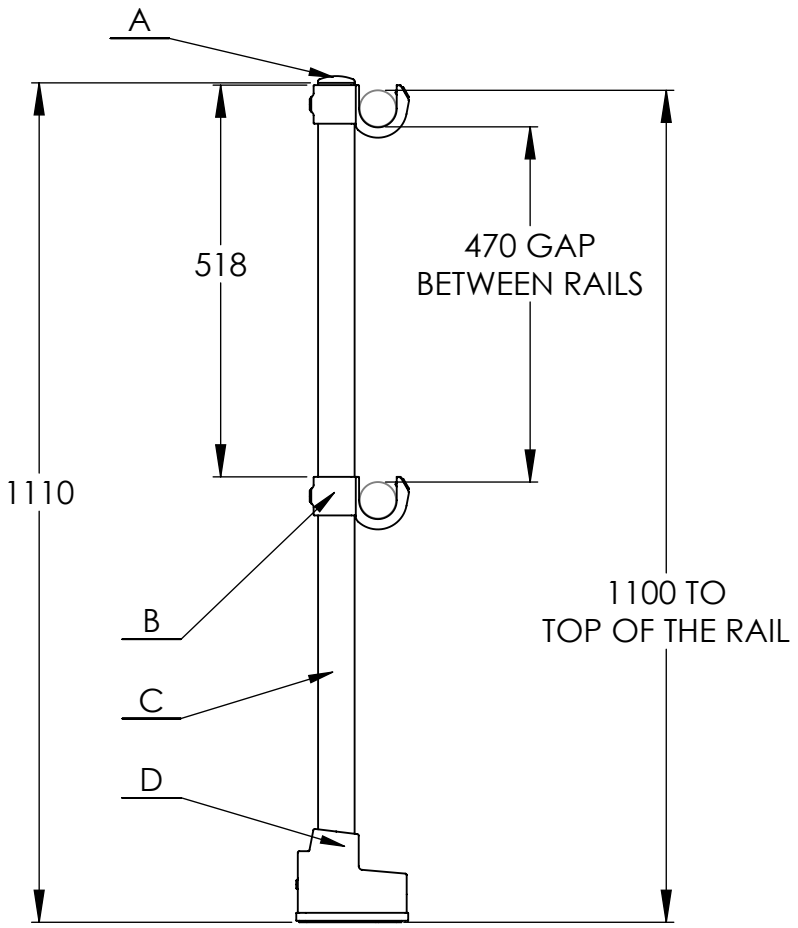

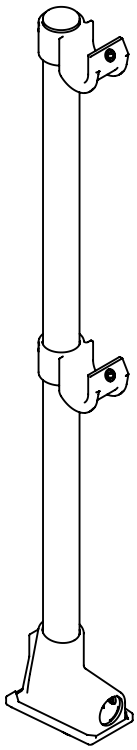

ITEM NO.	PART NO.	DESCRIPTION	QTY.	LENGTH
A	007780040	77-8 PLASTIC PLUG	1	
B	013580010	135-8 KEE GUARD II KLAMP CASTING	2	
C	KGA228010	TUBE 8 - S - G @ 1100mm x 4mm	1	1100
D	113087510	130-87514 KEEGUARD UPRIGHT BASE STANDARD TYPE	1	

APPLICATION

This assembly allow the guardrail to be installed in standard 90ºorientation. The support leg also allows for height **adjustment to the system. The vertical support legs are produced in steel - 48.3mm external diameter.**

COMPONENT SPECIFICATION

Material	**Steel tubing to EN 10255 - 4mm / Malleable Cast Iron / PVC / Rubber**
Finish	**Galvanised to BS EN ISO 1461 / PVC, Rubber - natural**
Weight	**8.03**

Issue Date: 30/05/2017 **Issue No: 2**

Technical Datasheet No: 0016

KGU11 KEEGUARD UPRIGHT ASSEMBLY NON-CHIPPING ROOF

Part No: KGU11

Short Part No: KGA201210

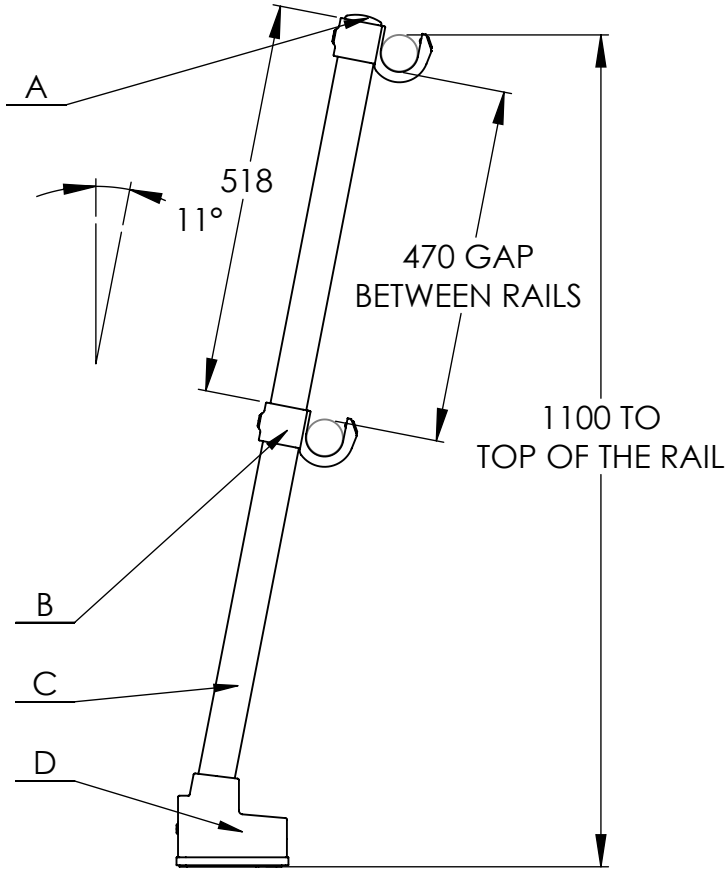

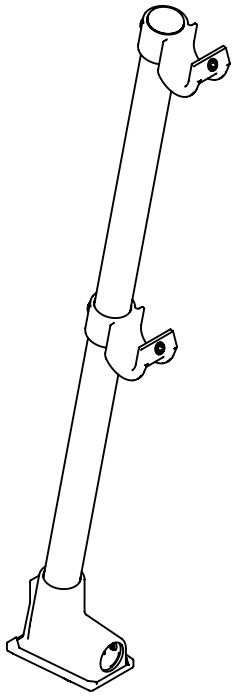

ITEM NO.	PART NO.	DESCRIPTION	QTY.	LENGTH
A	007780040	77-8 PLASTIC PLUG	1	
B	013580010	135-8 KEE GUARD II KLAMP CASTING	2	
C	TUBE SIZE 8	TUBE 8 - S - G @ 1125mm x 4mm	1	1125
D	113087510	130-87514 KEEGUARD UPRIGHT BASE STANDARD TYPE	1	

APPLICATION

This assembly allow the guardrail to be installed in raked back at 11º orientation. The support leg also allows for height **adjustment to the system. The vertical support legs are produced in steel - 48.3mm external diameter.**

COMPONENT SPECIFICATION

Material	**Steel tubing to EN 10255 - 4mm / Malleable Cast Iron / PVC / Rubber**
Finish	**Galvanised to BS EN ISO 1461 / PVC, Rubber - natural**
Weight	**8.14**

Issue Date: 30/05/2017 **Issue No: 2**

Technical Datasheet No: 0017

KGUR KEEGUARD UPRIGHT ASSEMBLY NON-PEBBLE ROOF

Part No: KGUR

Short Part No: KGA201410

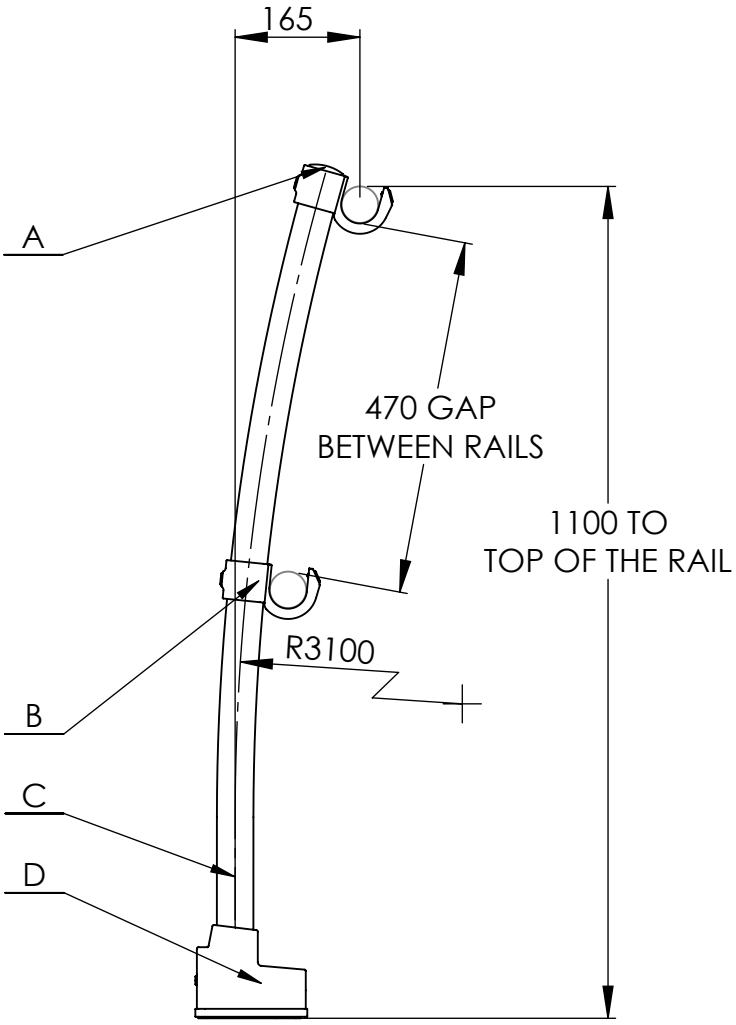

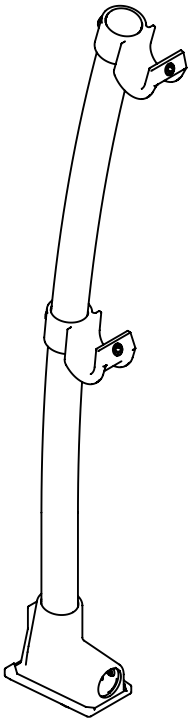

ITEM NO.	PART NO.	DESCRIPTION	QTY.	LENGTH
A	007780040	77-8 PLASTIC PLUG	1	
B	013580010	135-8 KEE GUARD II KLAMP CASTING	2	
C	KGA229010	TUBE 8 - S - G @ 1125 x 4mm RADIUSES KGU.	1	1125
D	113087510	130-87514 KEEGUARD UPRIGHT BASE STANDARD TYPE	1	

APPLICATION

This assembly allow the guardrail to be installed in radiused and bent orientation. The support leg also allows for height adjustment to the system. The vertical support legs are produced in steel - 48.3mm external diameter.

COMPONENT SPECIFICATION

Material	Steel tubing to EN 10255 - 4mm / Malleable Cast Iron / PVC / Rubber
Finish	Galvanised to BS EN ISO 1461 / PVC, Rubber - natural
Weight	8.13

Technical Datasheet No: 0018

KGUB KEE GUARD UPRIGHT ASSEMBLY NON-PEBBLE ROOF

Part No: KGUB

Short Part No: KGA201610

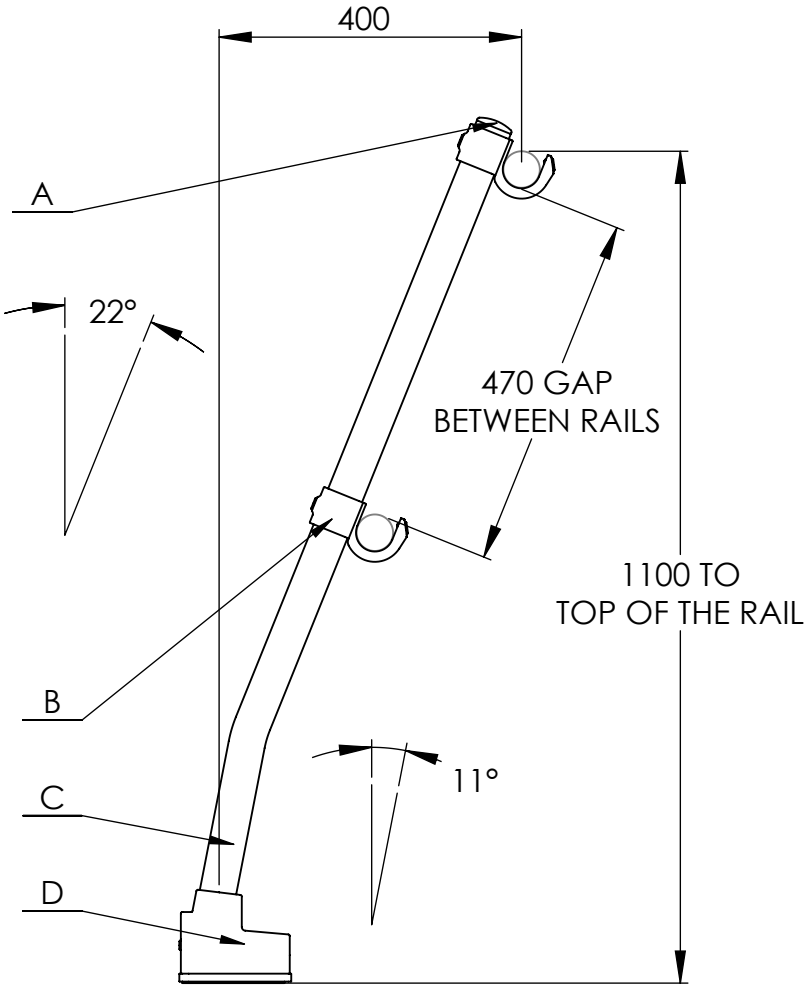

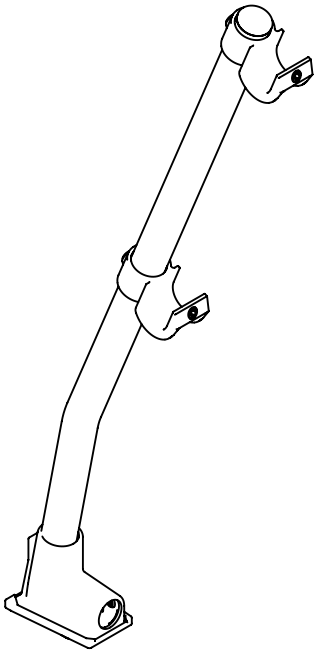

ITEM NO.	PART NO.	DESCRIPTION	QTY.	LENGTH
A	007780040	77-8 PLASTIC PLUG	1	
B	013580010	135-8 KEE GUARD II KLAMP CASTING	2	
C	KGA228020	TUBE 8 - S - G @ 1185 x 4mm BEND UPRIGHT TUBE	1	1185
D	113087510	130-87514 KEEGUARD UPRIGHT BASE STANDARD TYPE	1	

APPLICATION

This assembly allow the guardrail to be installed in raked back at 11º orientation. The support leg also allows for height **adjustment to the system. The vertical support legs are produced in steel - 48.3mm external diameter.**

COMPONENT SPECIFICATION

Material	**Steel tubing to EN 10255 - 4mm / Malleable Cast Iron / PVC / Rubber**
Finish	**Galvanised to BS EN ISO 1461 / PVC, Rubber - natural**
Weight	**8.43**

Issue Date: 30/05/2017 **Issue No: 2**

Technical Datasheet No: 0019

KGU12040 KEEGUARD UPRIGHT ASSEMBLY NON-CHIPPING ROOF

Part No: KGA229410

Short Part No: KGU12040

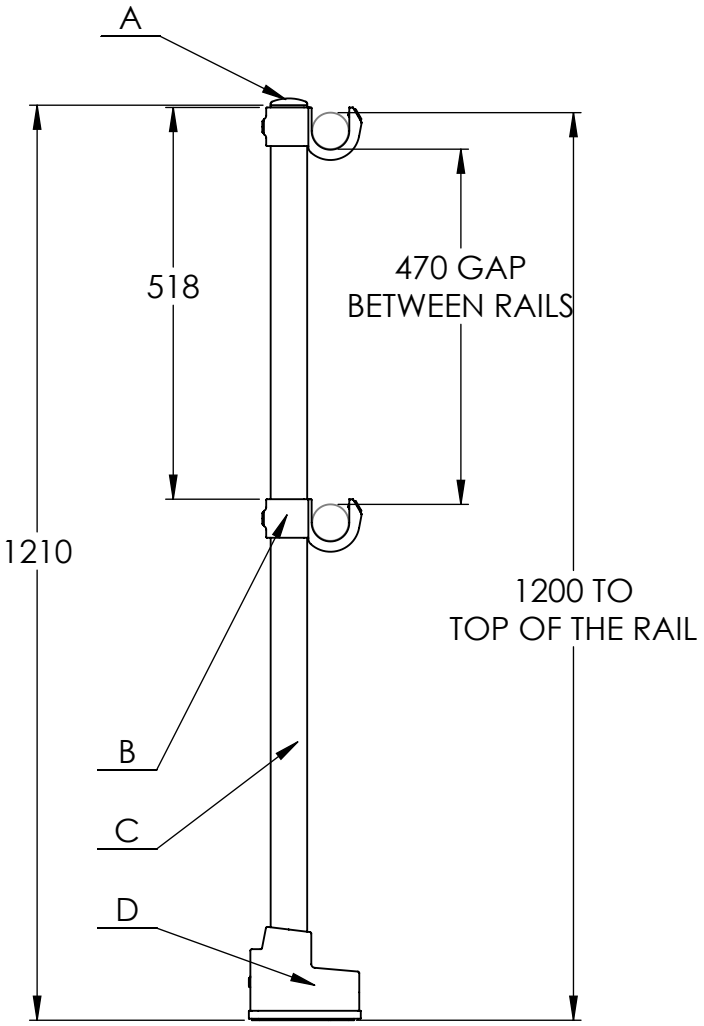

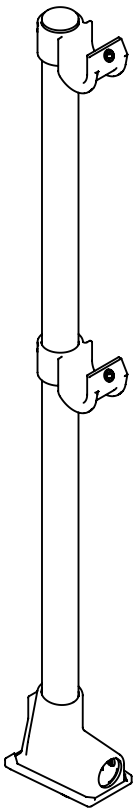

ITEM NO.	PART NO.	DESCRIPTION	QTY.	LENGTH
A	007780040	77-8 PLASTIC PLUG	1	
B	013580010	135-8 KEE GUARD II KLAMP CASTING	2	
C	TUBE SIZE 8	TUBE 8 - S - G @ 1200mm x 4mm	1	1200
D	113087510	130-87514 KEEGUARD UPRIGHT BASE STANDARD TYPE	1	

APPLICATION

This assembly allow the guardrail to be installed in standard 90º orientation. The support leg also allows for height **adjustment to the system. The vertical support legs are produced in steel - 48.3mm external diameter.**

COMPONENT SPECIFICATION

Material	**Steel tubing to EN 10255 - 4mm / Malleable Cast Iron / PVC / Rubber**
Finish	**Galvanised to BS EN ISO 1461 / PVC, Rubber - natural**
Weight	**8.47**

Issue Date: 30/05/2017 **Issue No: 2**

Technical Datasheet No: 0020

KGUW KEEGUARD UPRIGHT ASSEMBLY FOR USE WITH KEEWALK

Part No: KGUW

Short Part No: KGA201710

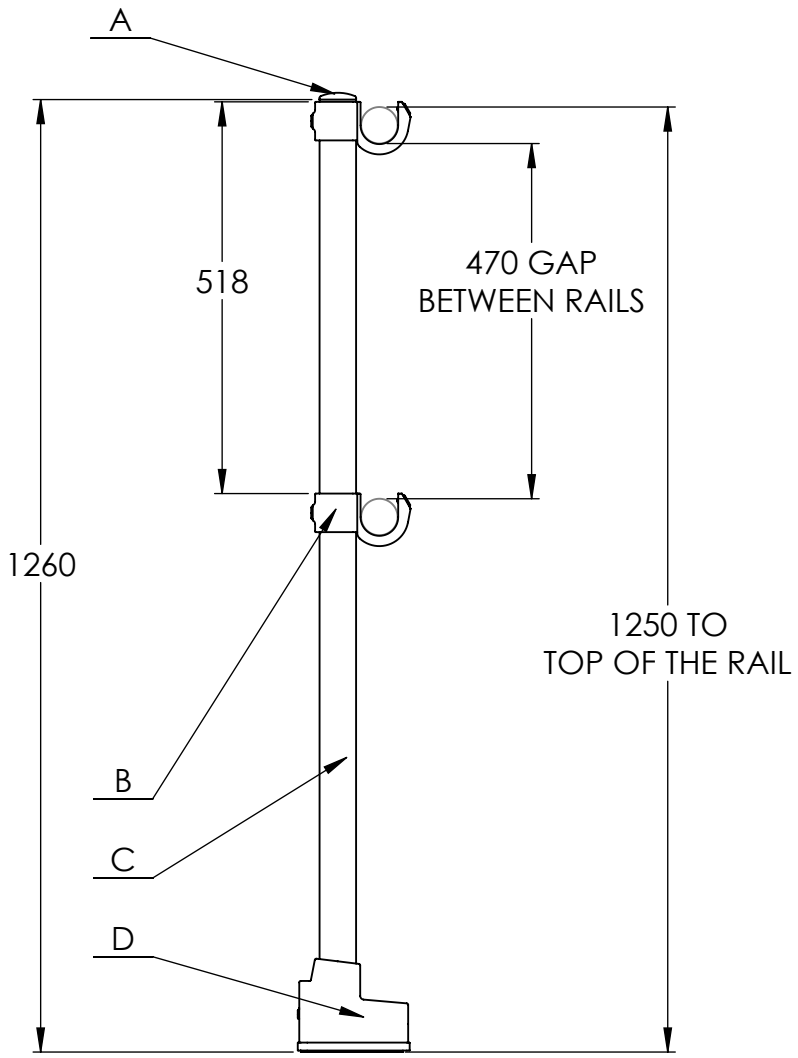

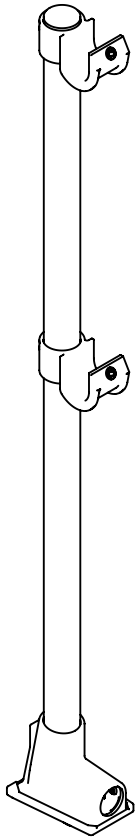

ITEM NO.	PART NO.	DESCRIPTION	QTY.	LENGTH
A	007780040	77-8 PLASTIC PLUG	1	
B	013580010	135-8 KEE GUARD II KLAMP CASTING	2	
C	TUBE SIZE 8	TUBE 8 - S - G @ 1240mm x 4mm	1	1240
D	113087510	130-87514 KEEGUARD UPRIGHT BASE STANDARD TYPE	1	

APPLICATION

This assembly allow the guardrail to be installed in standard 90º orientation. The support leg also allows for height **adjustment to the system. The vertical support legs are produced in steel - 48.3mm external diameter.**

COMPONENT SPECIFICATION

Material	**Steel tubing to EN 10255 - 4mm / Malleable Cast Iron / PVC / Rubber**
Finish	**Galvanised to BS EN ISO 1461 / PVC, Rubber - natural**
Weight	**8.65**

Issue Date: 30/05/2017 **Issue No: 2**

Technical Datasheet No: 0021

KGU35T KEEGUARD UPRIGHT ASSEMBLY NON CHIPPING ROOF

Part No: KGU35T

Short Part No: KGA20T310

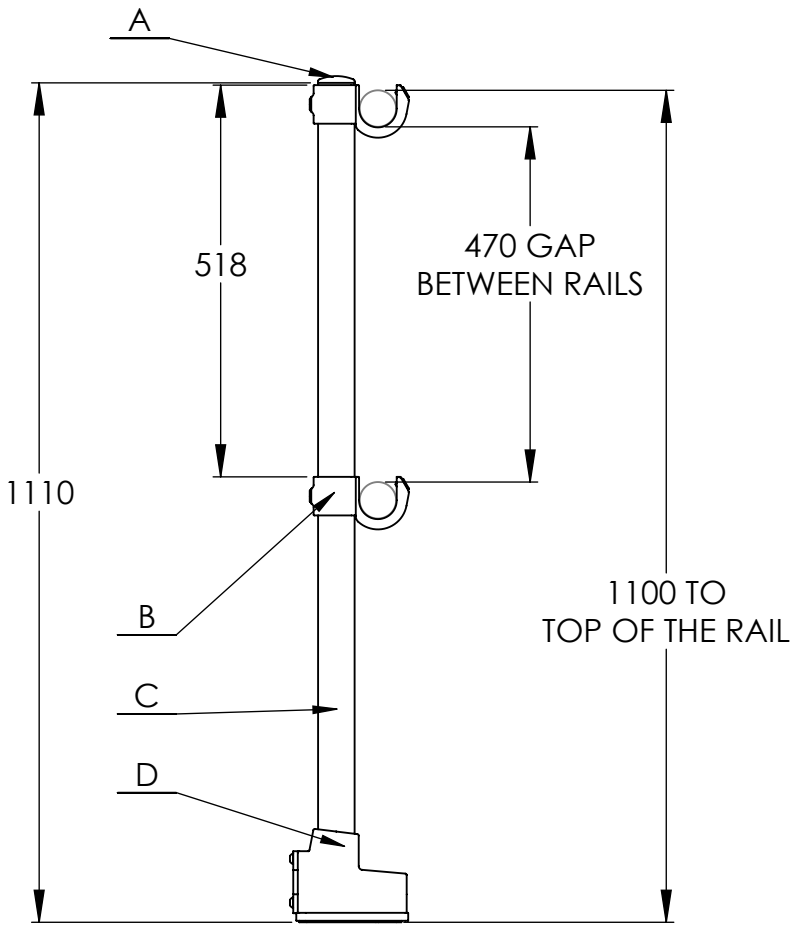

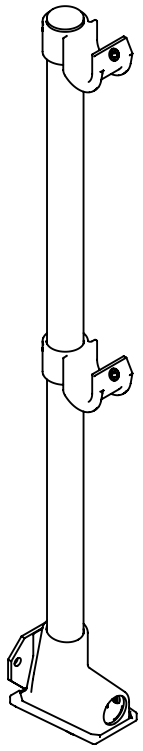

ITEM NO.	PART NO.	DESCRIPTION	QTY.	LENGTH
A	007780040	77-8 PLASTIC PLUG	1	
B	013580010	135-8 KEE GUARD II KLAMP CASTING	2	
C	KGA228010	TUBE 8 - S - G @ 1100mm x 4mm	1	1100
D	T13087510	130-875T KEEGUARD UPRIGHT BASE TOEBOARD OPTION	1	

APPLICATION

This assembly allow the guardrail to be installed in standard 90º orientation. The support leg also allows for height **adjustment to the system. The vertical support legs are produced in steel - 48.3mm external diameter.**

COMPONENT SPECIFICATION

Material	**Steel tubing to EN 10255 - 4mm / Malleable Cast Iron / PVC / Rubber**
Finish	**Galvanised to BS EN ISO 1461 / PVC, Rubber - natural**
Weight	**8.34**

Issue Date: 30/05/2017 **Issue No: 2**

Technical Datasheet No: 0022

KGU11T KEEGUARD UPRIGHT ASSEMBLY NON-CHIPPING ROOF

Part No: KGU11T

Short Part No: KGA20T210

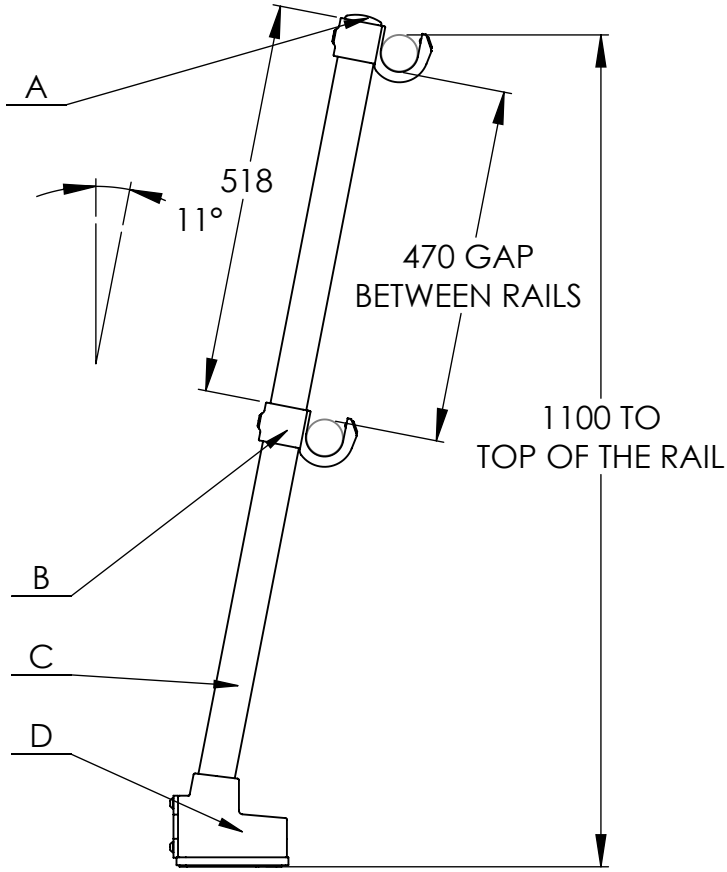

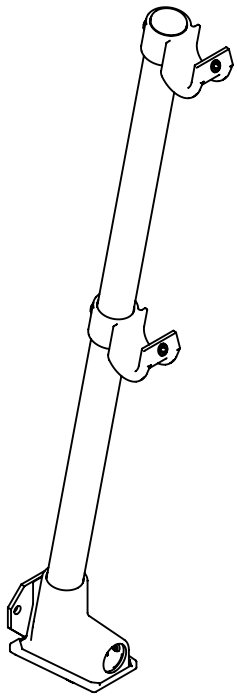

ITEM NO.	PART NO.	DESCRIPTION	QTY.	LENGTH
A	007780040	77-8 PLASTIC PLUG	1	
B	013580010	135-8 KEE GUARD II KLAMP CASTING	2	
C	TUBE SIZE 8	TUBE 8 - S - G @ 1125mm x 4mm	1	1125
D	T13087510	130-875T KEEGUARD UPRIGHT BASE TOEBOARD OPTION	1	

APPLICATION

This assembly allow the guardrail to be installed in raked back at 11º orientation. The support leg also allows for height **adjustment to the system. The vertical support legs are produced in steel - 48.3mm external diameter.**

COMPONENT SPECIFICATION

Material	**Steel tubing to EN 10255 - 4mm / Malleable Cast Iron / PVC / Rubber**
Finish	**Galvanised to BS EN ISO 1461 / PVC, Rubber - natural**
Weight	**8.45**

Issue Date: 30/05/2017 **Issue No: 2**

Technical Datasheet No: 0023

KGURT KEEGUARD UPRIGHT ASSEMBLY NON-PEBBLE ROOF

Part No: KGURT

Short Part No: KGA20T410

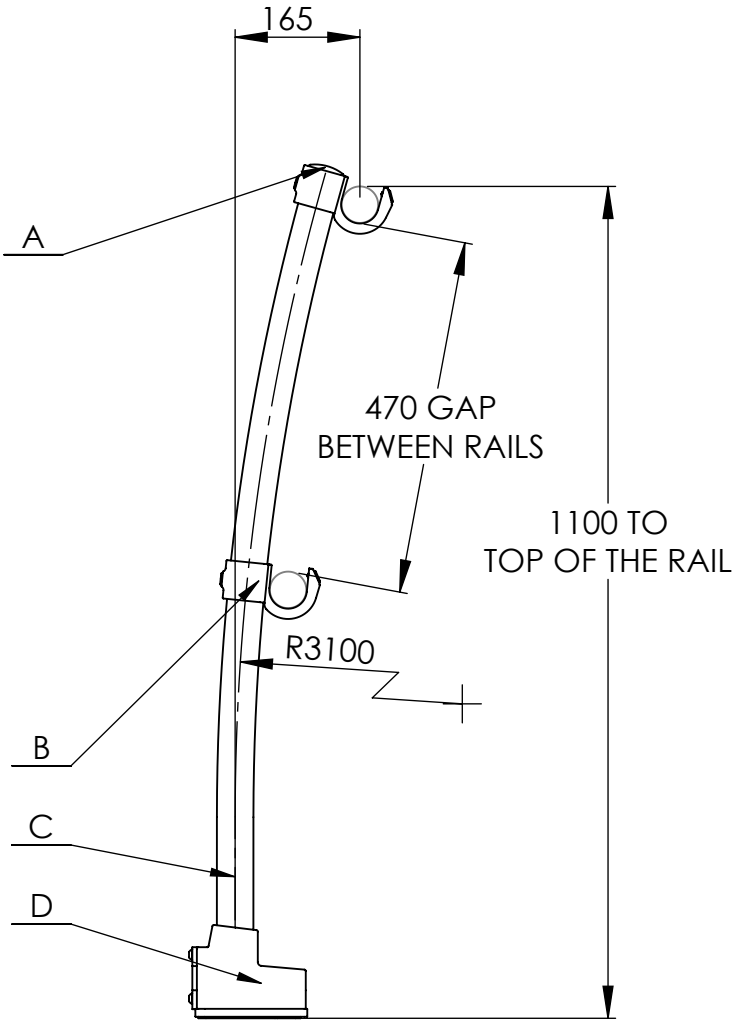

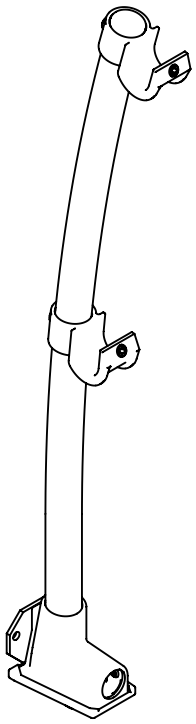

ITEM NO.	PART NO.	DESCRIPTION	QTY.	LENGTH
A	007780040	77-8 PLASTIC PLUG	1	
B	013580010	135-8 KEE GUARD II KLAMP CASTING	2	
C	KGA229010	TUBE 8 - S - G @ 1125 x 4mm RADIUSES KGU.	1	1125
D	T13087510	130-875T KEEGUARD UPRIGHT BASE TOEBOARD OPTION	1	

APPLICATION

This assembly allow the guardrail to be installed in radiused and bent orientation. The support leg also allows for height adjustment to the system. The vertical support legs are produced in steel - 48.3mm external diameter.

COMPONENT SPECIFICATION

Material	Steel tubing to EN 10255 - 4mm / Malleable Cast Iron / PVC / Rubber
Finish	Galvanised to BS EN ISO 1461 / PVC, Rubber - natural
Weight	8.44

Technical Datasheet No: 0024

KGUBT KEEGUARD UPRIGHT ASSEMBLY NON-PEBBLE ROOF

Part No: KGUBT

Short Part No: KGA20T610

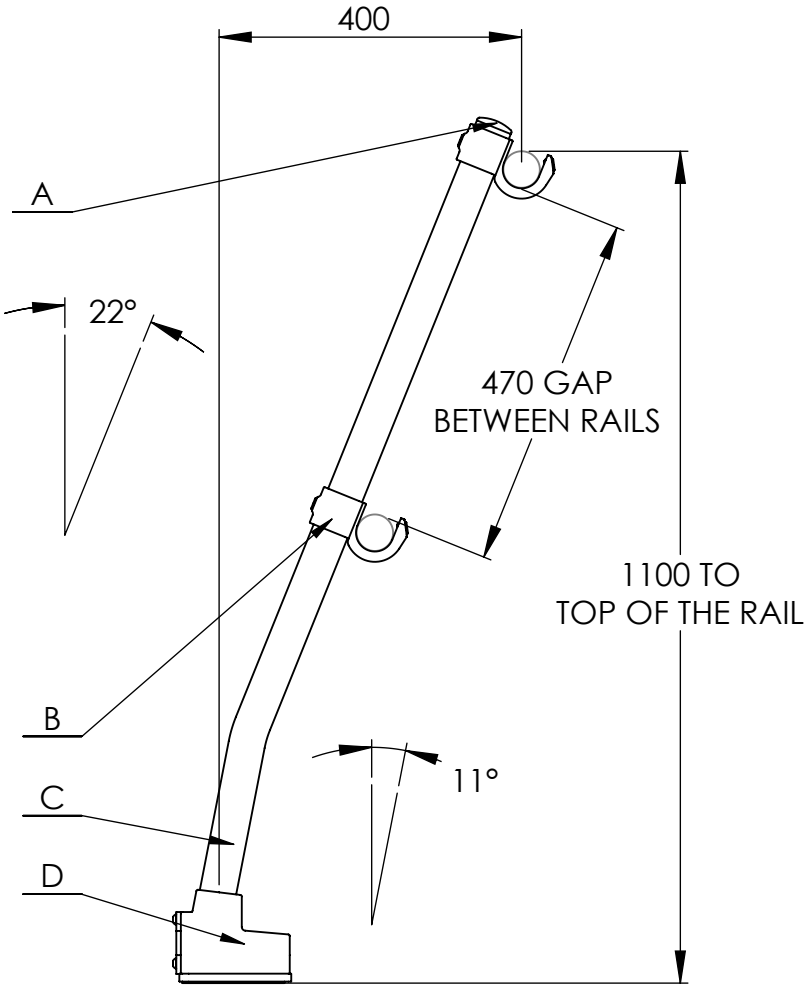

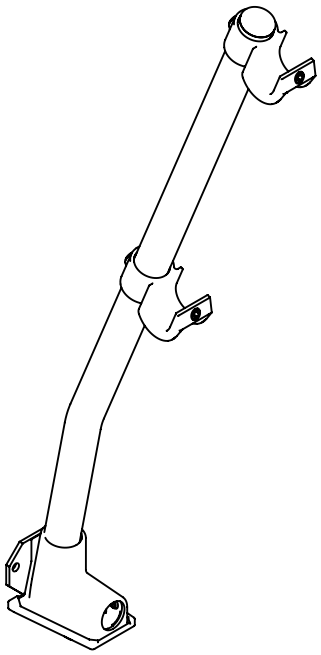

ITEM NO.	PART NO.	DESCRIPTION	QTY.	LENGTH
A	007780040	77-8 PLASTIC PLUG	1	
B	013580010	135-8 KEE GUARD II KLAMP CASTING	2	
C	KGA228020	TUBE 8 - S - G @ 1185 x 4mm BEND UPRIGHT TUBE	1	1185
D	T13087510	130-875T KEEGUARD UPRIGHT BASE TOEBOARD OPTION	1	

APPLICATION

This assembly allow the guardrail to be installed in raked back at 11º orientation. The support leg also allows for height **adjustment to the system. The vertical support legs are produced in steel - 48.3mm external diameter.**

COMPONENT SPECIFICATION

Material	**Steel tubing to EN 10255 - 4mm / Malleable Cast Iron / PVC / Rubber**
Finish	**Galvanised to BS EN ISO 1461 / PVC, Rubber - natural**
Weight	**8.74**

Issue Date: 30/05/2017 **Issue No: 2**

Technical Datasheet No: 0025

KGU1200 KEEGUARD UPRIGHT ASSEMBLY NON-CHIPPING ROOF

Part No: KGU01200T

Short Part No: KGU1200

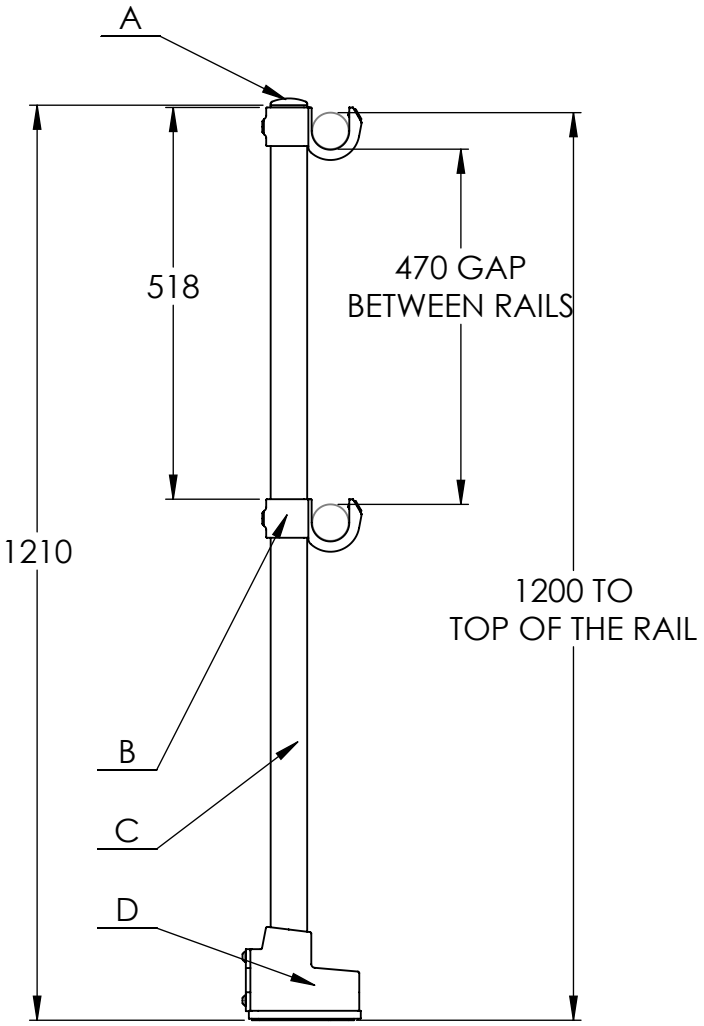

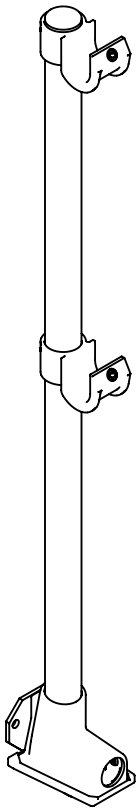

ITEM NO.	PART NO.	DESCRIPTION	QTY.	LENGTH
A	007780040	77-8 PLASTIC PLUG	1	
B	013580010	135-8 KEE GUARD II KLAMP CASTING	2	
C	TUBE SIZE 8	TUBE 8 - S - G @ 1200mm x 4mm	1	1200
D	T13087510	130-875T KEEGUARD UPRIGHT BASE TOEBOARD OPTION	1	

APPLICATION

This assembly allow the guardrail to be installed in standard 90º orientation. The support leg also allows for height **adjustment to the system. The vertical support legs are produced in steel - 48.3mm external diameter.**

COMPONENT SPECIFICATION

Material	**Steel tubing to EN 10255 - 4mm / Malleable Cast Iron / PVC / Rubber**
Finish	**Galvanised to BS EN ISO 1461 / PVC, Rubber - natural**
Weight	**8.79**

Issue Date: 30/05/2017 **Issue No: 2**

Technical Datasheet No: 0026

KEEGUARD UPRIGHT ASSEMBLY STANDART TYPE

Part No: KGU29

Short Part No: KGA601310

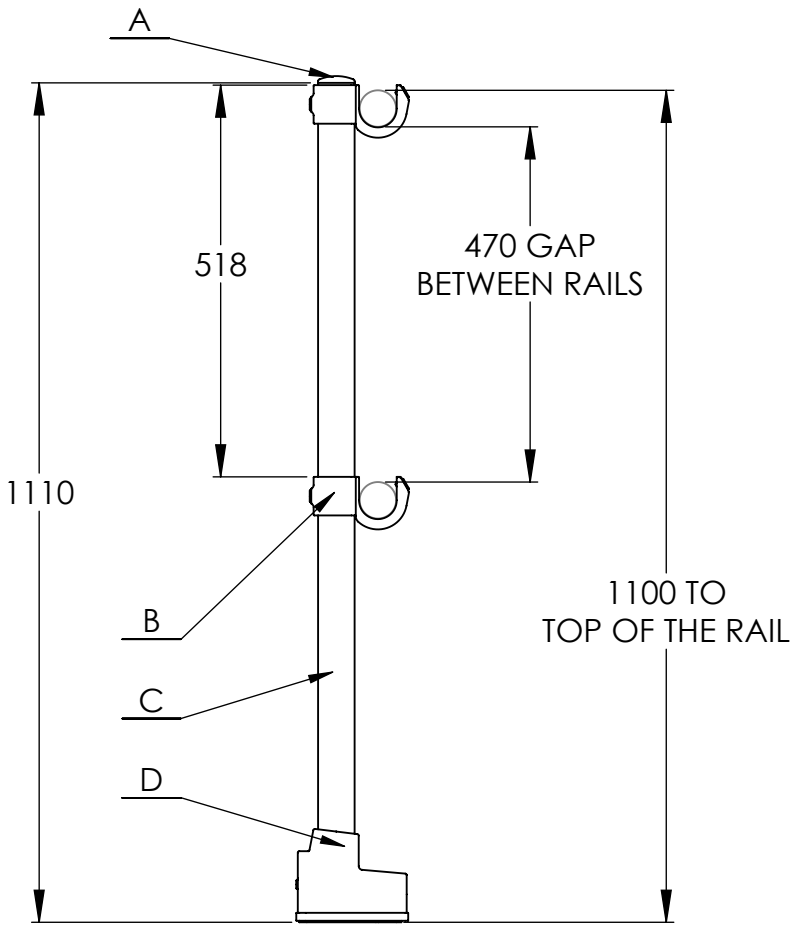

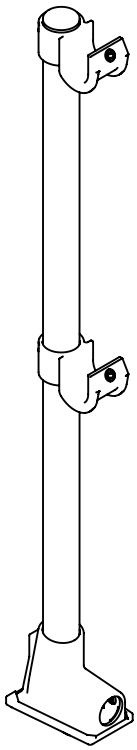

ITEM NO.	PART NO.	DESCRIPTION	QTY.	LENGTH
A	007780040	77-8 PLASTIC PLUG	1	
B	013580010	135-8 KEE GUARD II KLAMP CASTING	2	
C	KGA228310	∅48,3 x 2,9 EN10255 GALV @ 1100mm	1	1100
D	113087510	130-87514 KEEGUARD UPRIGHT BASE STANDARD TYPE	1	

APPLICATION

This assembly allow the guardrail to be installed in standard 90º orientation. The support leg also allows for height **adjustment to the system. The vertical support legs are produced in steel - 48.3mm external diameter.**

COMPONENT SPECIFICATION

Material	**Steel tubing to EN 10255 - 2.9mm / Malleable Cast Iron / Rubber**
Finish	**Galvanised to BS EN ISO 1461 / PVC, Rubber - natural**
Weight	**6.73**

Issue Date: 30/05/2017 **Issue No: 2**

Technical Datasheet No: 0027

KEEGUARD UPRIGHT ASSEMBLY CRANKED TYPE

Part No: KGU12

Short Part No: KGA601210

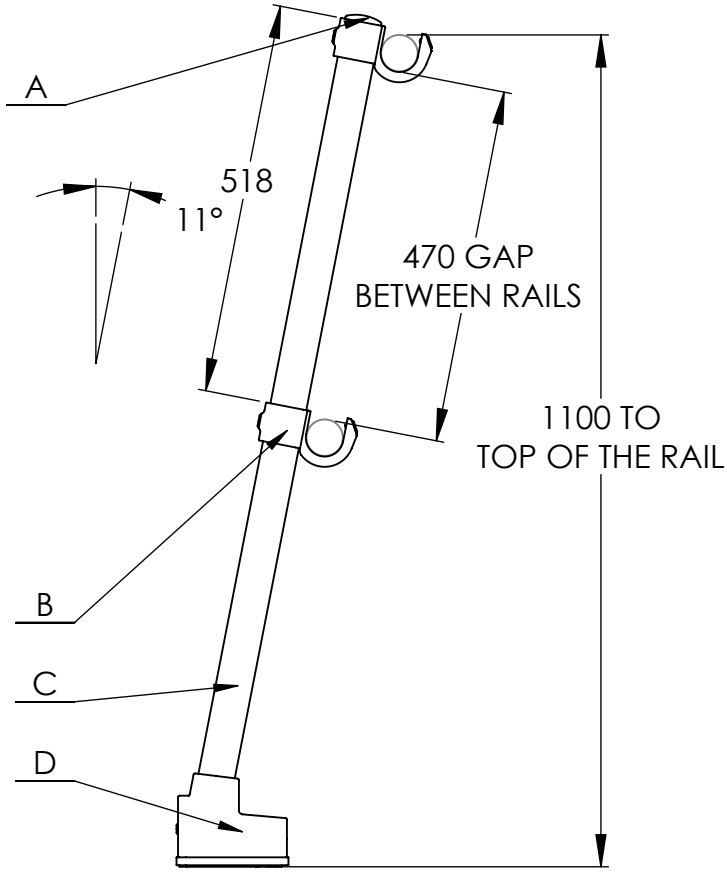

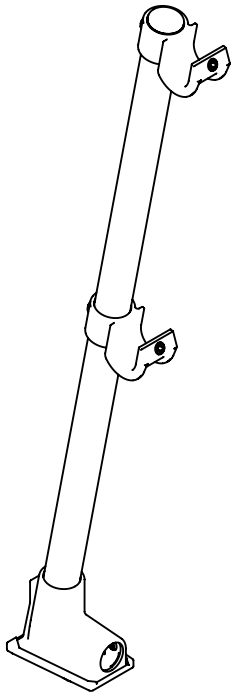

ITEM NO.	PART NO.	DESCRIPTION	QTY.	LENGTH
A	007780040	77-8 PLASTIC PLUG	1	
B	013580010	135-8 KEE GUARD II KLAMP CASTING	2	
C	TUBE SIZE 8	∅48,3 x 2,9 EN10255 GALV @ 1125mm	1	1125
D	113087510	130-87514 KEEGUARD UPRIGHT BASE STANDARD TYPE	1	

APPLICATION

This assembly allow the guardrail to be installed in raked back at 11º orientation. The support leg also allows for height **adjustment to the system. The vertical support legs are produced in steel - 48.3mm external diameter.**

COMPONENT SPECIFICATION

Material	Steel tubing to EN 10255 - 2.9mm / Malleable Cast Iron / Rubber
Finish	Galvanised to BS EN ISO 1461 / PVC, Rubber - natural
Weight	6.82

Technical Datasheet No: 0028

KEEGUARD UPRIGHT ASSEMBLY RADIUSED TYPE

Part No: KGUR2

Short Part No: KGA601410

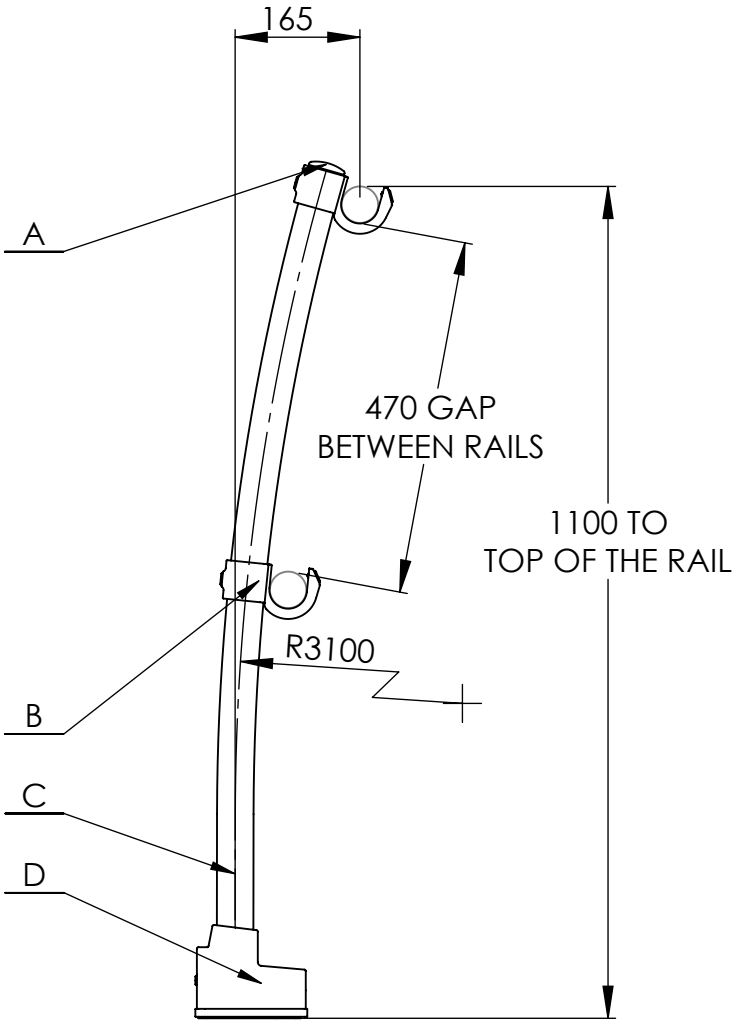

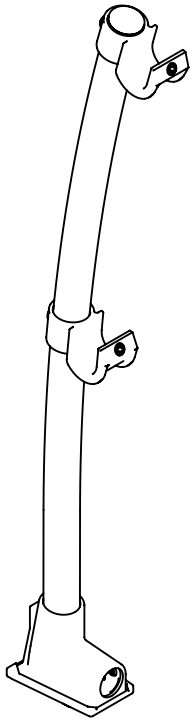

ITEM NO.	PART NO.	DESCRIPTION	QTY.	LENGTH
A	007780040	77-8 PLASTIC PLUG	1	
B	013580010	135-8 KEE GUARD II KLAMP CASTING	2	
C	KGA629010	∅48,3 x 2,9 EN10255 GALV @ 1125mm	1	1125
D	113087510	130-87514 KEEGUARD UPRIGHT BASE STANDARD TYPE	1	

APPLICATION

This assembly allow the guardrail to be installed in radiused and bent orientation. The support leg also allows for height adjustment to the system. The vertical support legs are produced in steel - 48.3mm external diameter.

COMPONENT SPECIFICATION

Material	Steel tubing to EN 10255 - 2.9mm / Malleable Cast Iron / Rubber
Finish	Galvanised to BS EN ISO 1461 / PVC, Rubber - natural
Weight	6.81

Technical Datasheet No: 0029

KEEGUARD UPRIGHT ASSEMBLY BENT TYPE

Part No: KGUB2

Short Part No: KGA601610

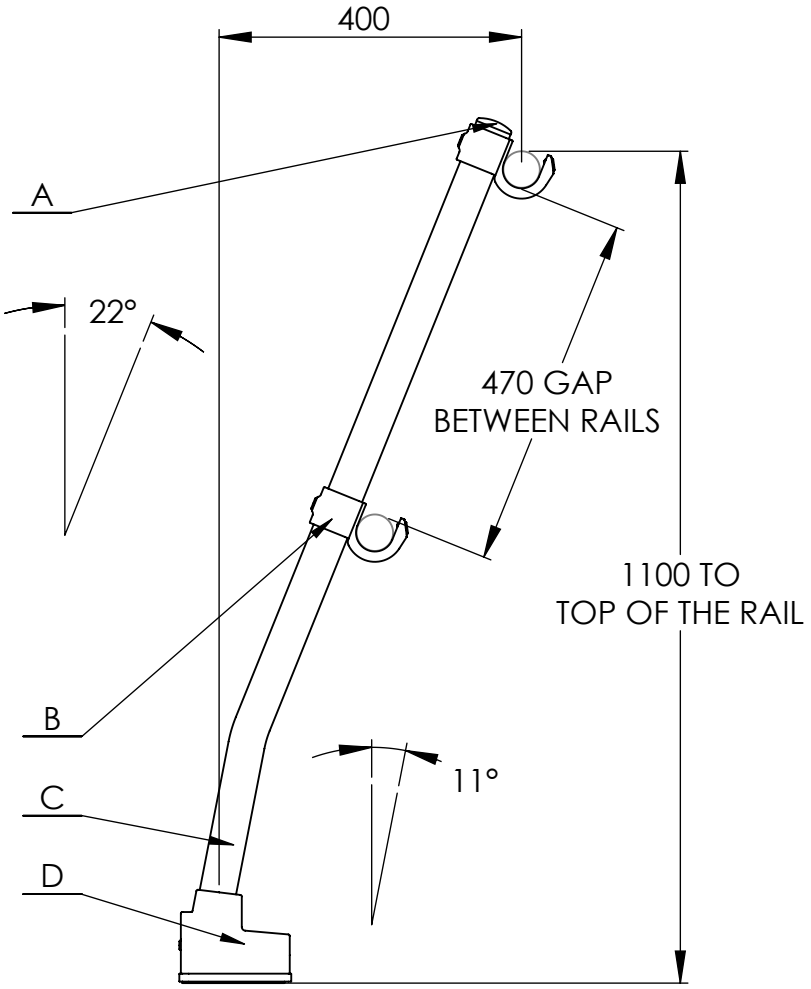

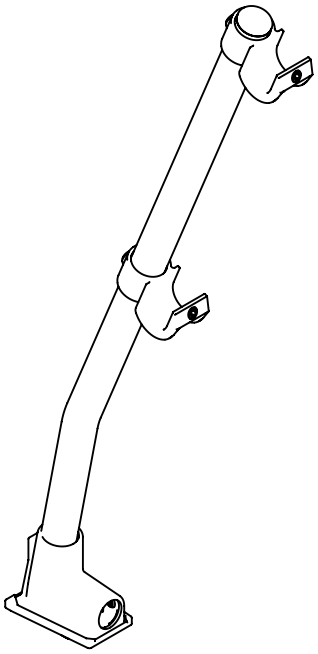

ITEM NO.	PART NO.	DESCRIPTION	QTY.	LENGTH
A	007780040	77-8 PLASTIC PLUG	1	
B	013580010	135-8 KEE GUARD II KLAMP CASTING	2	
C	KGA298020	∅48,3 x 2,9 EN10255 GALV BEND TO WA-370 - A=325mm B=865mm ab=169°	1	1185
D	113087510	130-87514 KEEGUARD UPRIGHT BASE STANDARD TYPE	1	

APPLICATION

This assembly allow the guardrail to be installed in raked back at 11º orientation. The support leg also allows for height **adjustment to the system. The vertical support legs are produced in steel - 48.3mm external diameter.**

COMPONENT SPECIFICATION

Material	**Steel tubing to EN 10255 - 2.9mm / Malleable Cast Iron / Rubber**
Finish	**Galvanised to BS EN ISO 1461 / PVC, Rubber - natural**
Weight	**7.03**

Issue Date: 30/05/2017 **Issue No: 2**

Technical Datasheet No: 0030

KEEGUARD UPRIGHT ASSEMBLY NON CHIPPING ROOF

Part No: KGU29T

Short Part No: KGA60T310

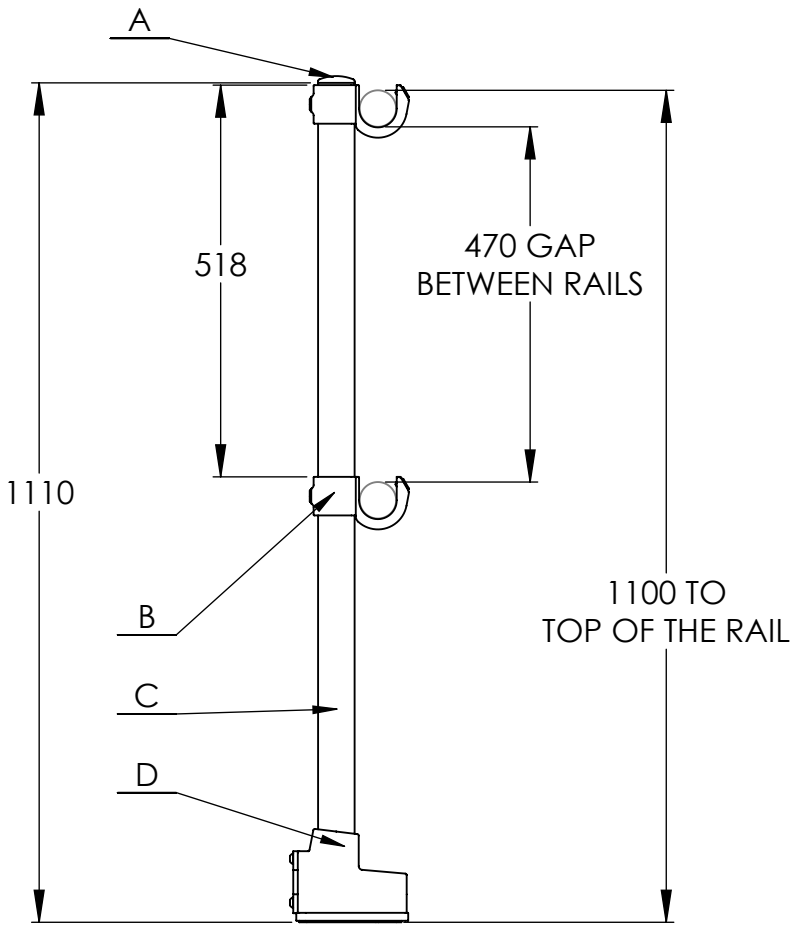

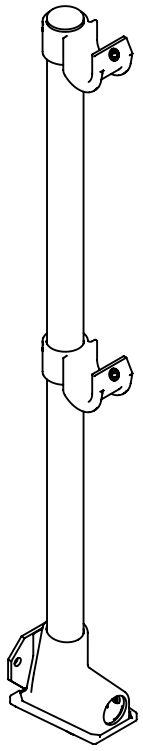

ITEM NO.	PART NO.	DESCRIPTION	QTY.	LENGTH
A	007780040	77-8 PLASTIC PLUG	1	
B	013580010	135-8 KEE GUARD II KLAMP CASTING	2	
C	KGA228310	∅48,3 x 2,9 EN10255 GALV @ 1100mm	1	1100
D	T13087510	130-875T KEEGUARD UPRIGHT BASE TOEBOARD OPTION	1	

APPLICATION

This assembly allow the guardrail to be installed in standard 90º orientation. The support leg also allows for height **adjustment to the system. The vertical support legs are produced in steel - 48.3mm external diameter.**

COMPONENT SPECIFICATION

Material	**Steel tubing to EN 10255 - 2.9mm / Malleable Cast Iron / Rubber**
Finish	**Galvanised to BS EN ISO 1461 / PVC, Rubber - natural**
Weight	**7.05**

Issue Date: 30/05/2017 **Issue No: 2**

Technical Datasheet No: 0031

KEEGUARD UPRIGHT ASSEMBLY CRANKED TYPE

Part No: KGU12T

Short Part No: KGA60T210

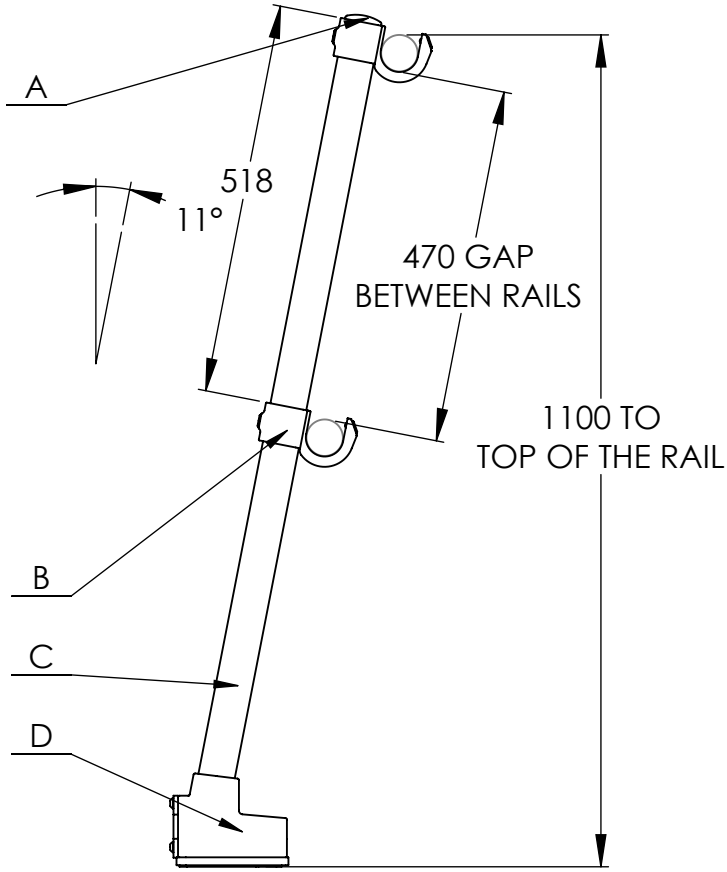

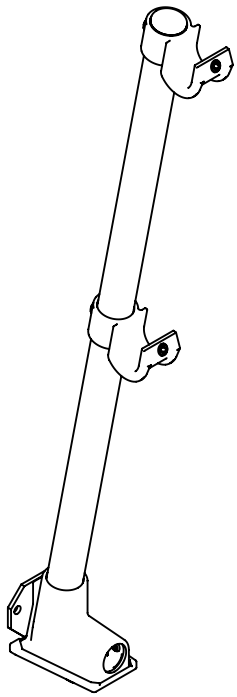

ITEM NO.	PART NO.	DESCRIPTION	QTY.	LENGTH
A	007780040	77-8 PLASTIC PLUG	1	
B	013580010	135-8 KEE GUARD II KLAMP CASTING	2	
C	TUBE SIZE 8	∅48,3 x 2,9 EN10255 GALV @ 1125mm	1	1125
D	T13087510	130-875T KEEGUARD UPRIGHT BASE TOEBOARD OPTION	1	

APPLICATION

This assembly allow the guardrail to be installed in raked back at 11º orientation. The support leg also allows for height **adjustment to the system. The vertical support legs are produced in steel - 48.3mm external diameter.**

COMPONENT SPECIFICATION

Material	**Steel tubing to EN 10255 - 2.9mm / Malleable Cast Iron / Rubber**
Finish	**Galvanised to BS EN ISO 1461 / PVC, Rubber - natural**
Weight	**7.13**

Issue Date: 30/05/2017 **Issue No: 2**

Technical Datasheet No: 0032

KEEGUARD UPRIGHT ASSEMBLY RADIUSED TYPE

Part No: KGUR2T

Short Part No: KGA60T410

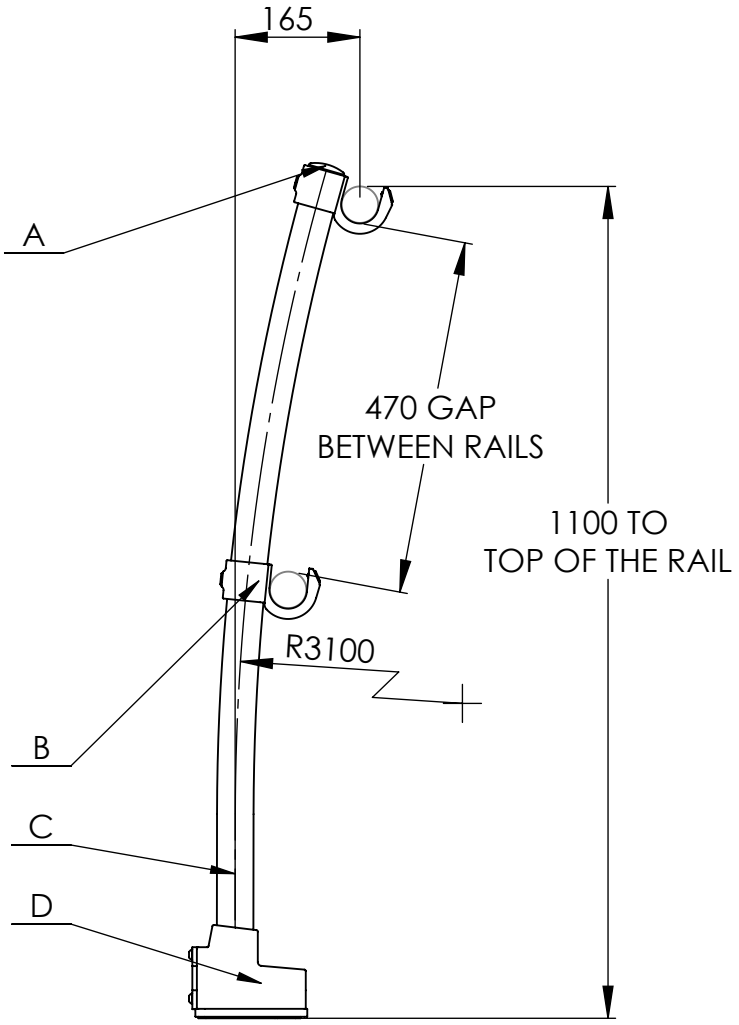

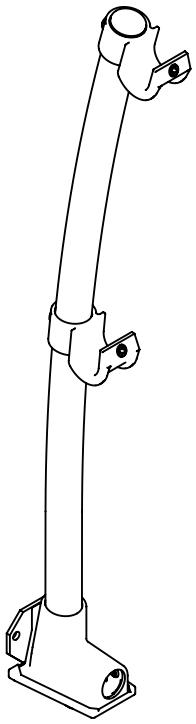

ITEM NO.	PART NO.	DESCRIPTION	QTY.	LENGTH
A	007780040	77-8 PLASTIC PLUG	1	
B	013580010	135-8 KEE GUARD II KLAMP CASTING	2	
C	KGA629010	Ø48,3 x 2,9 EN10255 GALV @ 1125mm	1	1125
D	T13087510	130-875T KEEGUARD UPRIGHT BASE TOEBOARD OPTION	1	

APPLICATION

This assembly allow the guardrail to be installed in radiused and bent orientation. The support leg also allows for height adjustment to the system. The vertical support legs are produced in steel - 48.3mm external diameter.

COMPONENT SPECIFICATION

Material	Steel tubing to EN 10255 - 2.9mm / Malleable Cast Iron / Rubber
Finish	Galvanised to BS EN ISO 1461 / PVC, Rubber - natural
Weight	7.12

Technical Datasheet No: 0033

KEEGUARD UPRIGHT ASSEMBLY BENT TYPE

Part No: KGUB2T

Short Part No: KGA60T610

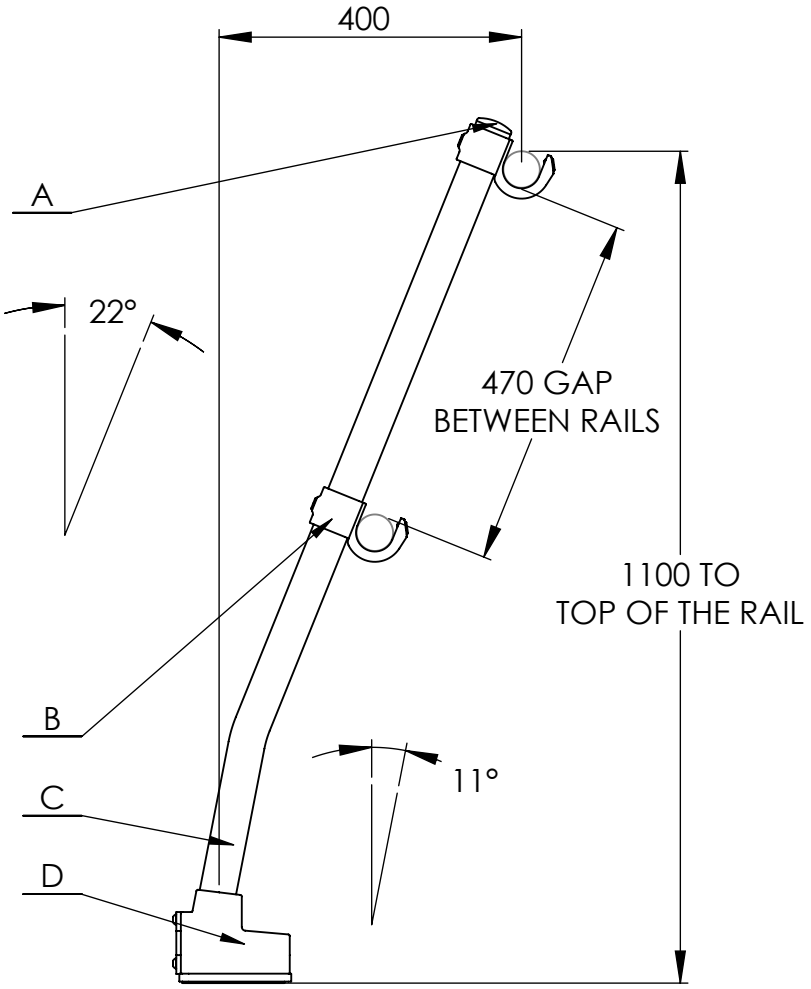

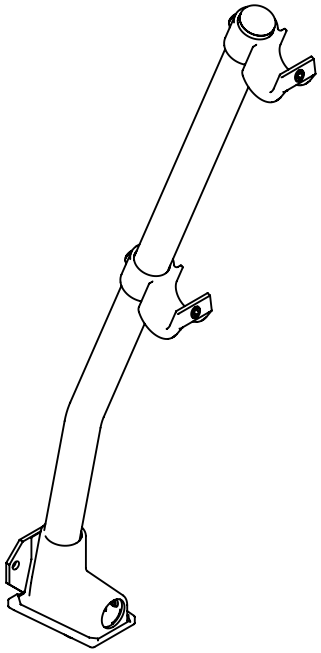

ITEM NO.	PART NO.	DESCRIPTION	QTY.	LENGTH
A	007780040	77-8 PLASTIC PLUG	1	
B	013580010	135-8 KEE GUARD II KLAMP CASTING	2	
C	KGA298020	∅48,3 x 2,9 EN10255 GALV BEND TO WA-370 - A=325mm B=865mm ab=169°	1	1185
D	T13087510	130-875T KEEGUARD UPRIGHT BASE TOEBOARD OPTION	1	

APPLICATION

This assembly allow the guardrail to be installed in raked back at 11º orientation. The support leg also allows for height **adjustment to the system. The vertical support legs are produced in steel - 48.3mm external diameter.**

COMPONENT SPECIFICATION

Material	**Steel tubing to EN 10255 - 2.9mm / Malleable Cast Iron / Rubber**
Finish	**Galvanised to BS EN ISO 1461 / PVC, Rubber - natural**
Weight	**7.34**

Issue Date: 30/05/2017 **Issue No: 2**

Technical Datasheet No: 0034

130-87514 KEEGUARD UPRIGHT BASE STANDARD TYPE

Part No: 113087510

Short Part No: 130-87514

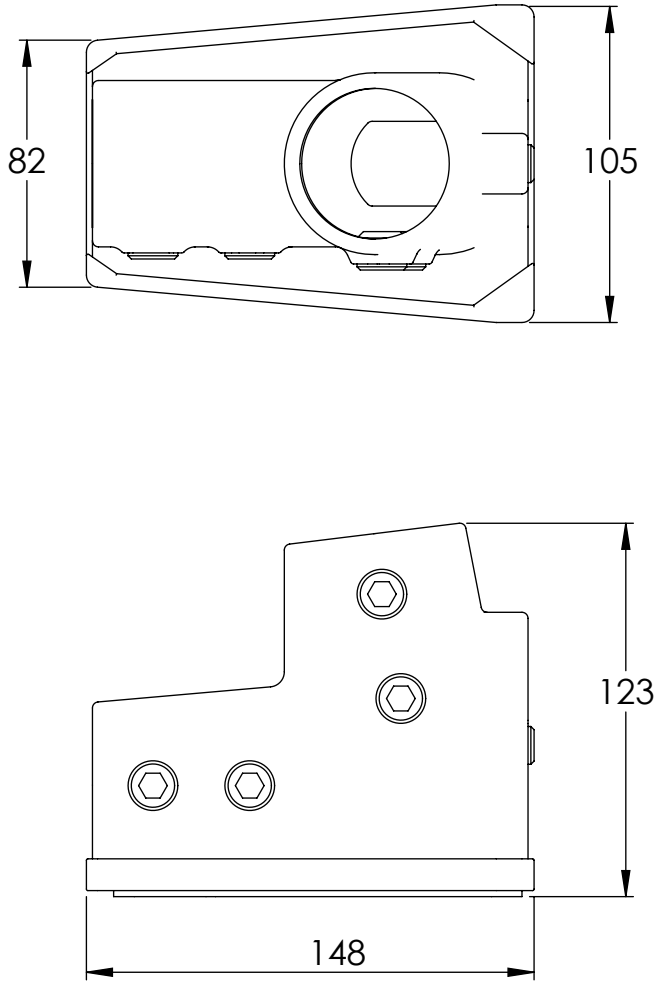

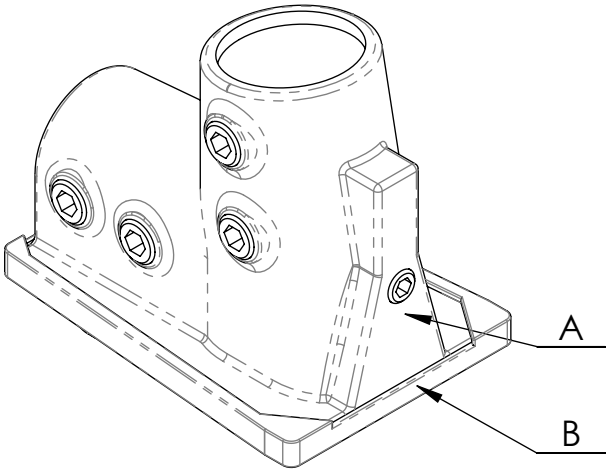

ITEM NO.	PART NO.	DESCRIPTION	QTY.
A	013087510	130-875 KEE GUARD CASTING	1
B	K13510080	130-875 KEE GUARD BASE PAD	1

APPLICATION

This unique component provides support to the system and allows the system to be set at 90º or raked back at 11º. The Base Foot connects the Cantilever Tubes and Counter Weights. The base is bonded with fluted rubber matting for membrane protection.

COMPONENT SPECIFICATION

Material	Malleable Cast Iron to BS 1562
Finish	Galvanised to BS EN ISO 1461
Weight	1.58

Technical Datasheet No: 0035

130-875T KEEGUARD UPRIGHT BASE TOEBOARD OPTION

Part No: T13087510

Short Part No: 130-875T

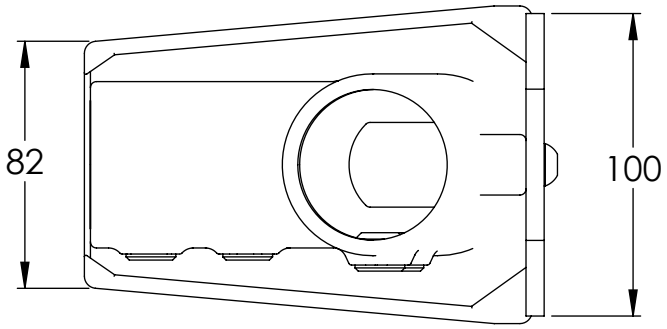

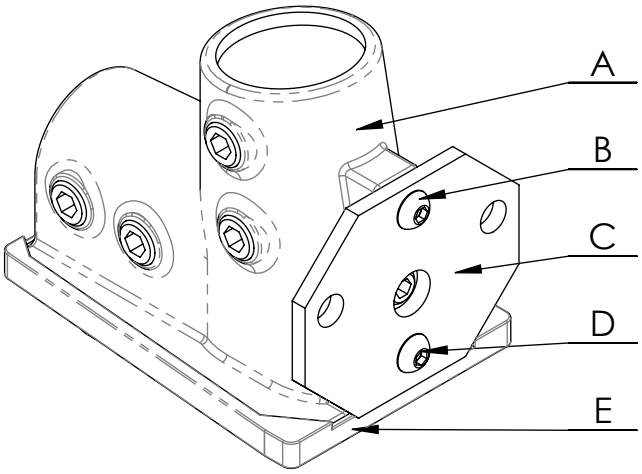

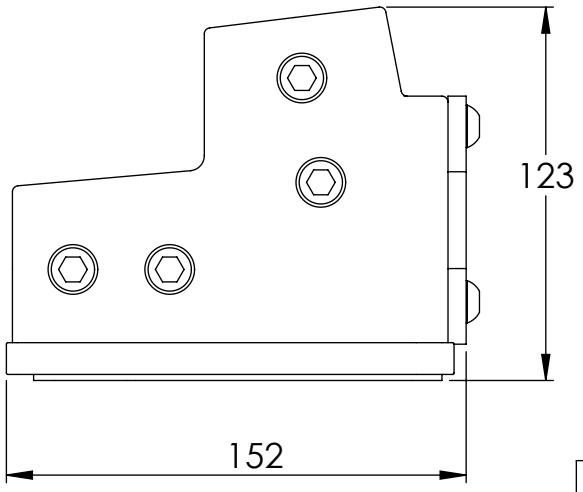

ITEM NO.	PART NO.	DESCRIPTION	QTY.
A	T13087510	130-875T KEE GUARD CASTING	1
B	WWHK85250R	M8 x 20 BUTTON HEAD SCREW GRADE A4-70	1
C	113087510	130-87514 - KEEGUARD BASEFOOT	1
D	WWHK81550R	M8 x 15 BUTTON HEAD SCREW GRADE A4-70	1
E	K13510080	130-875 KEE GUARD BASE PAD	1

APPLICATION

This unique component provides support to the system and allows the system to be set at 90º or raked back at 11º. The Base Foot connects the Cantilever Tubes and Counter Weights. The base is bonded with fluted rubber matting for membrane protection.

COMPONENT SPECIFICATION

Material	Malleable Cast Iron to BS 1562
Finish	Galvanised to BS EN ISO 1461
Weight	1.89

Technical Datasheet No: 0036

15-8 90° ELBOW

Part No: 001580010

Short Part No: 15-8

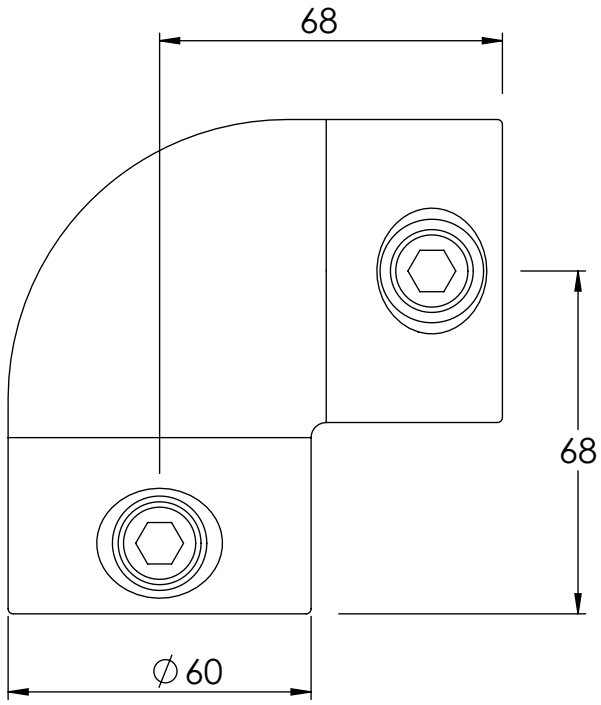

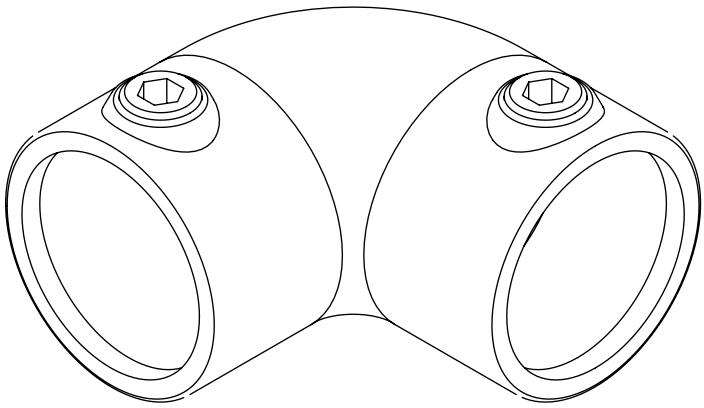

APPLICATION

This provides the means of dealing with corners and changes in level.

COMPONENT SPECIFICATION

Material	Malleable Cast Iron to BS 1562
Finish	Galvanised to BS EN ISO 1461
Weight	0.74

Technical Datasheet No: 0037

25-8 THREE SOCKET TEE

Part No: 002580010

Short Part No: 25-8

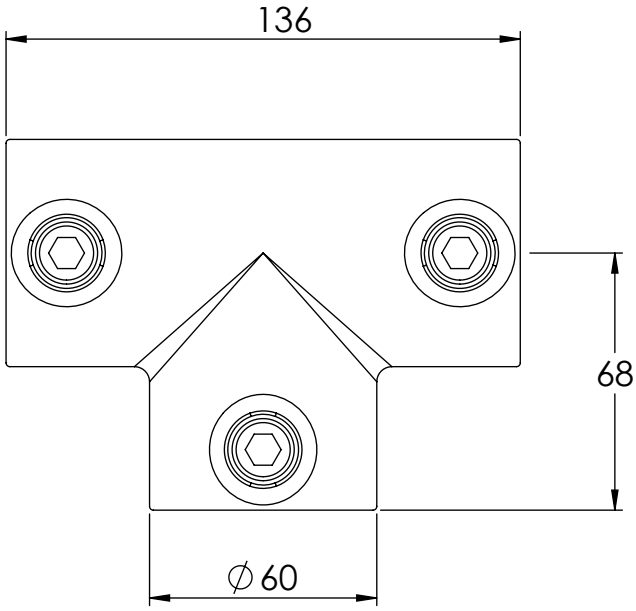

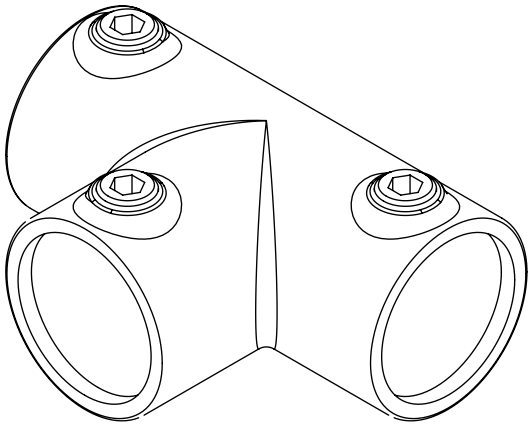

APPLICATION

This component can be used in many different instances, for example, changes in level.

COMPONENT SPECIFICATION

Material	Malleable Cast Iron to BS 1562
Finish	Galvanised to BS EN ISO 1461
Weight	1.02

Technical Datasheet No: 0038

135-8 KEE GUARD II KLAMP CASTING

Part No: 013580010

Short Part No: 135-8

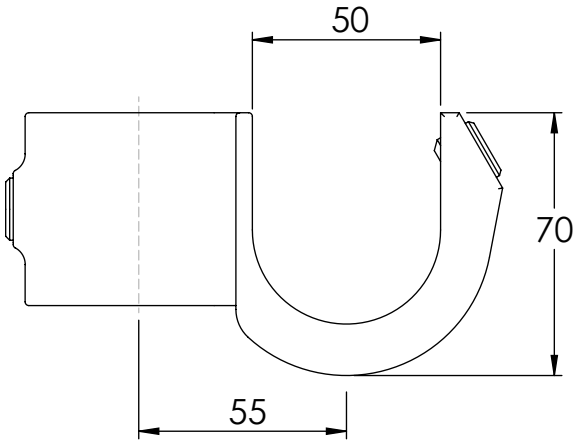

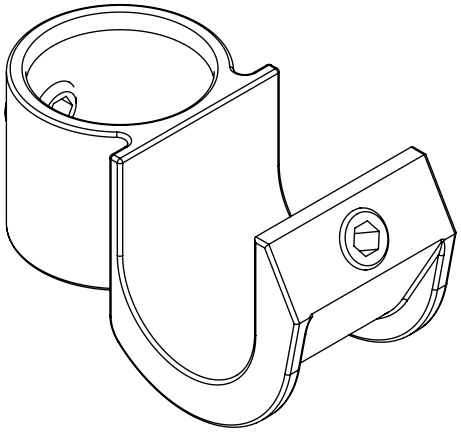

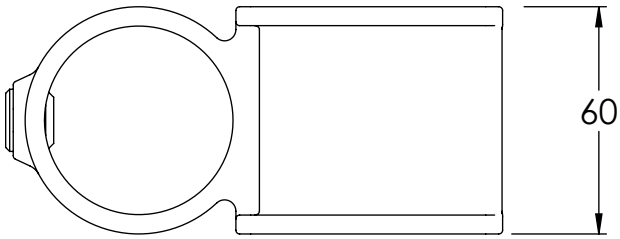

APPLICATION

This open cup fitting provides the method of linking the horizontal Main Rail Tubes to the Support Legs

COMPONENT SPECIFICATION

Material	Malleable Cast Iron to BS 1562
Finish	Galvanised to BS EN ISO 1461
Weight	0.78

Technical Datasheet No: 0039

A19-8 ADJUSTABLE SIDE QUTLET TEE

Part No: A01980010

Short Part No: A19-8

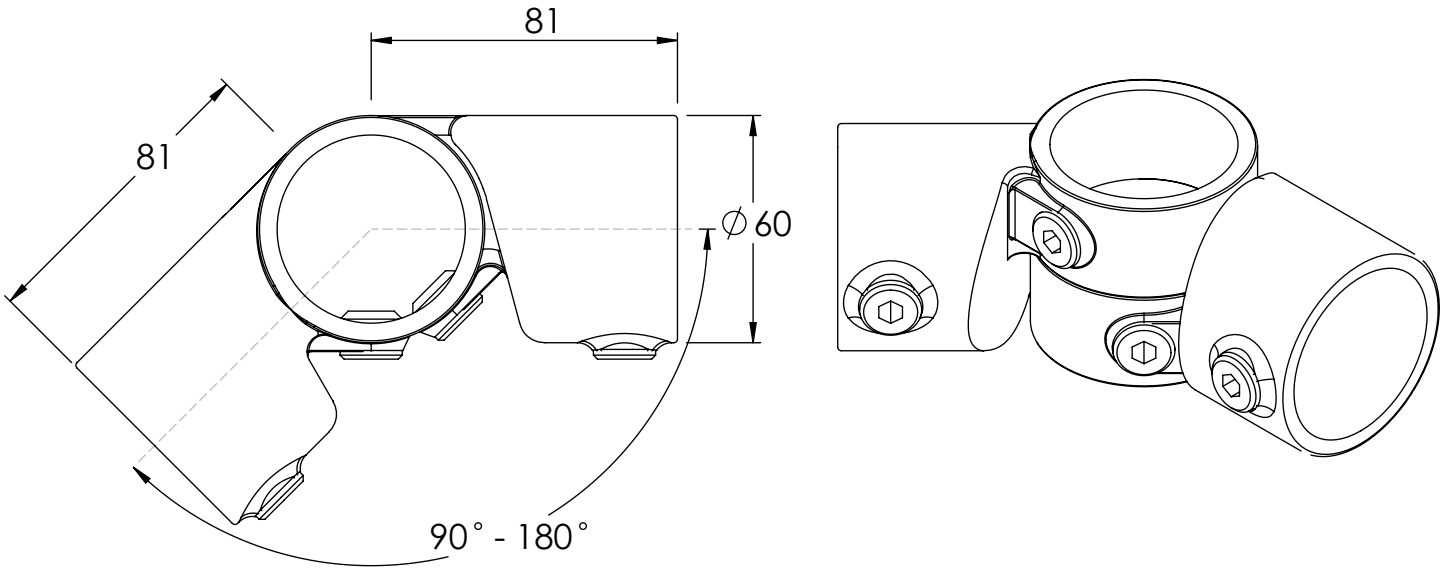

APPLICATION

Used in pairs these components deal with angles 90º-180ºand changes in level.

COMPONENT SPECIFICATION

Material	Malleable Cast Iron to BS 1562
Finish	Galvanised to BS EN ISO 1461
Weight	1.06

Technical Datasheet No: 0040

14-8 STRAIGHT COUPLING

Part No: 001480010

Short Part No: 14-8

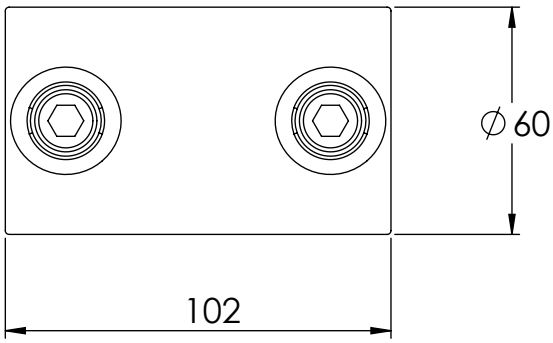

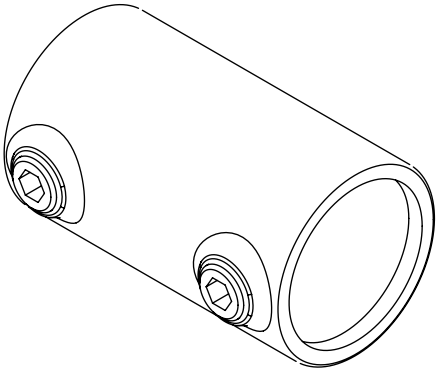

APPLICATION

This component provides the method to link the horizontal Main Rail Tubes.

COMPONENT SPECIFICATION

Material	Malleable Cast Iron to BS 1562
Finish	Galvanised to BS EN ISO 1461
Weight	0.62

Technical Datasheet No: 0041

26-7 TWO SOCKET CROSS

Part No: 002670010

Short Part No: 26-7

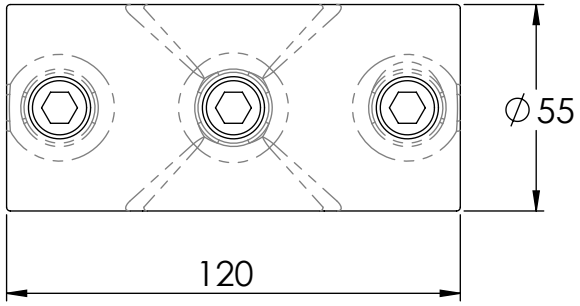

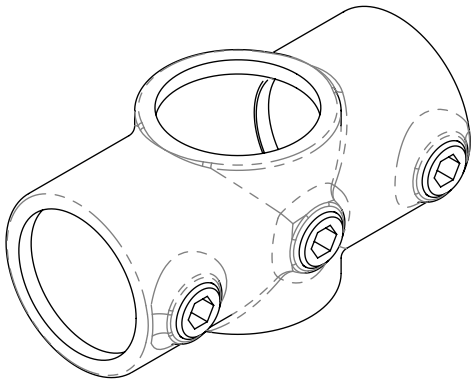

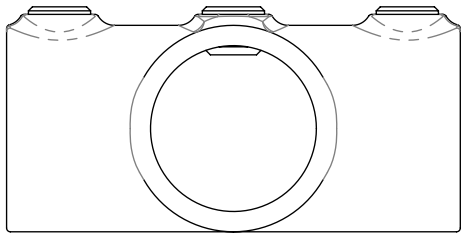

APPLICATION

This component is used where two recycled PVC Counter Weights need to be joined together to form a counter weight end detail.

COMPONENT SPECIFICATION

Material	Malleable Cast Iron to BS 1562
Finish	Galvanised to BS EN ISO 1461
Weight	0.77

Technical Datasheet No: 0042

74-7 COLLAR

Part No: 007470010

Short Part No: 74-7

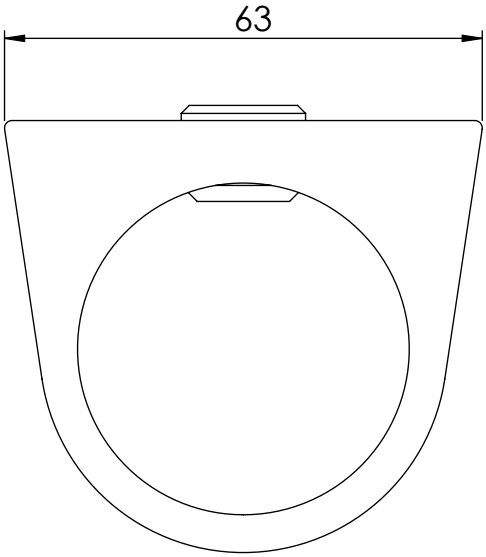

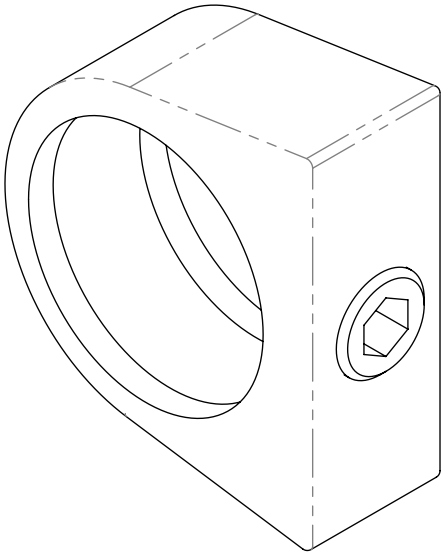

APPLICATION

This component is inserted in the first slot of the recycled PVC Counter Weight. The cantilever tube is pushed through this fitting and the grub screw is then tightened. This component provides the connection between the Cantilever Tube and the Counter Weight.

COMPONENT SPECIFICATION

Material	Malleable Cast Iron to BS 1562
Finish	Galvanised to BS EN ISO 1461
Weight	0.25

Technical Datasheet No: 0043

SL109C SAFESITE WALL/LADDER CLAMP

Part No: KGA300210

Short Part No: SL109C

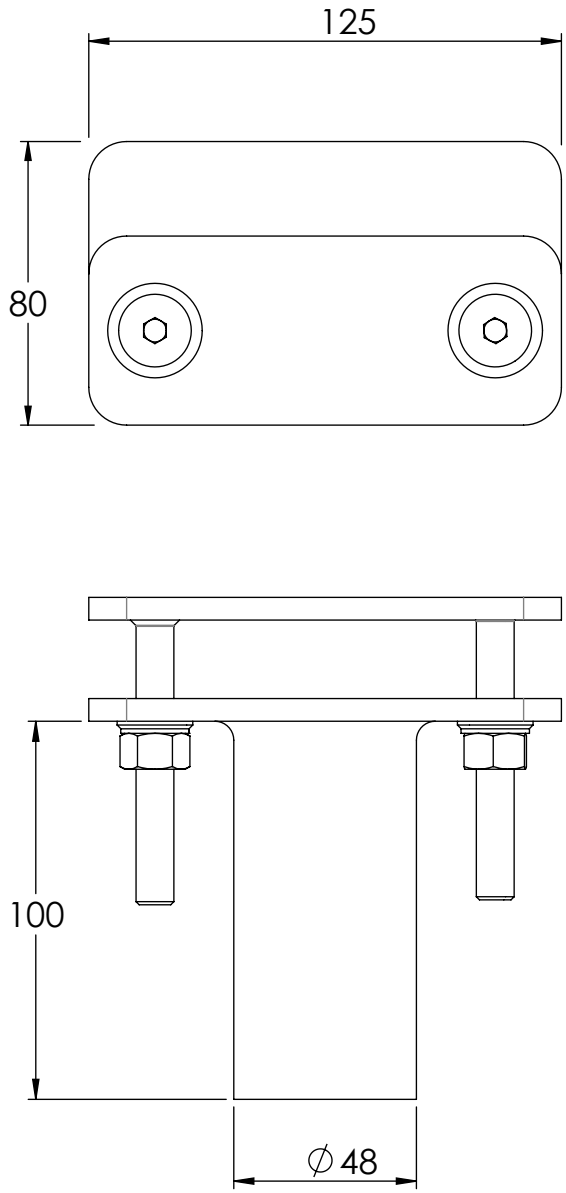

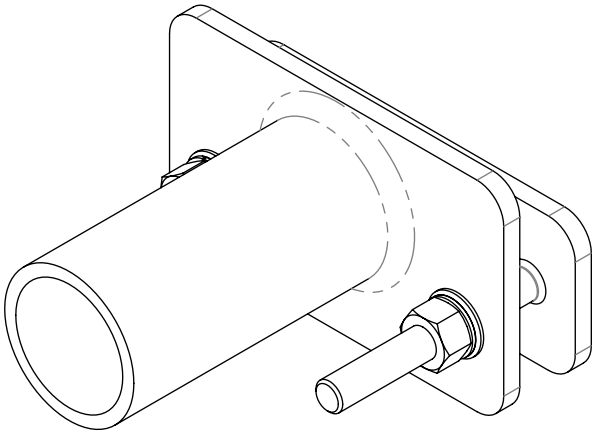

APPLICATION

This component provides the means to terminate the system against a facade or clamp the system to a cat ladder/structure wher the stringer is a maximum of 70mm wide.

COMPONENT SPECIFICATION

Material	Mild Steel
Finish	Galvanised to BS EN ISO 1461
Weight	1,10 kg

Technical Datasheet No: 0044

440-7 COUNTER BALANCE WEIGHT

Part No: 044070180

Short Part No: 440-7

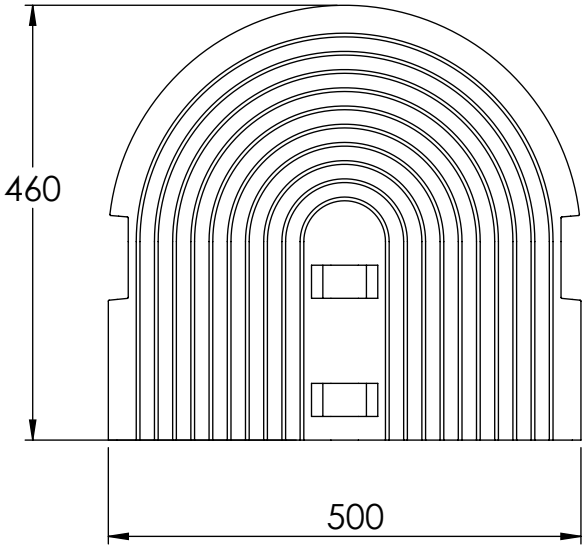

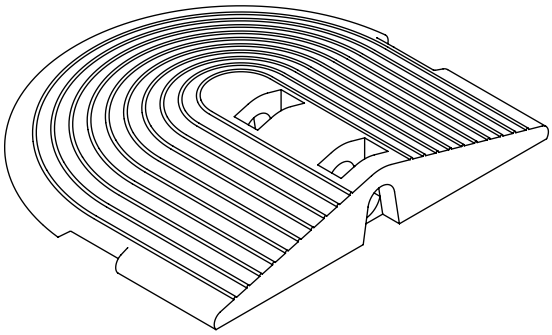

APPLICATION

This component provides the stability to the system.

COMPONENT SPECIFICATION

Material	Recycled PVC Rigid
Finish	Natural
Weight	13.30

Technical Datasheet No: 0045

77-8 PLASTIC PLUG

Part No: 007780040

Short Part No: 77-8

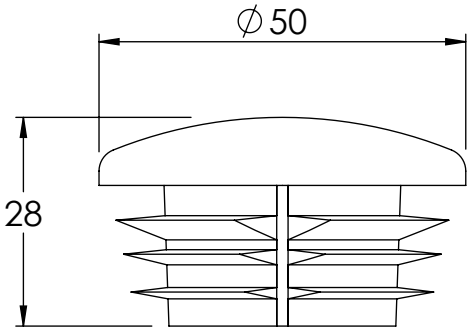

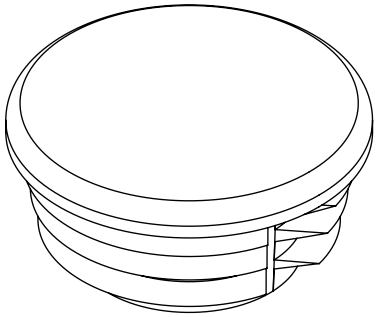

APPLICATION

This component is fi tted to the top of the Support Leg to prevent water ingress.

COMPONENT SPECIFICATION

Material	HDPE
Finish	Natural
Weight	0.014

Issue Date: 04/06/2017

Issue No: 2

Technical Datasheet No: 0046

SL110 WALL FIXING

Part No: SL110

Short Part No: SL110

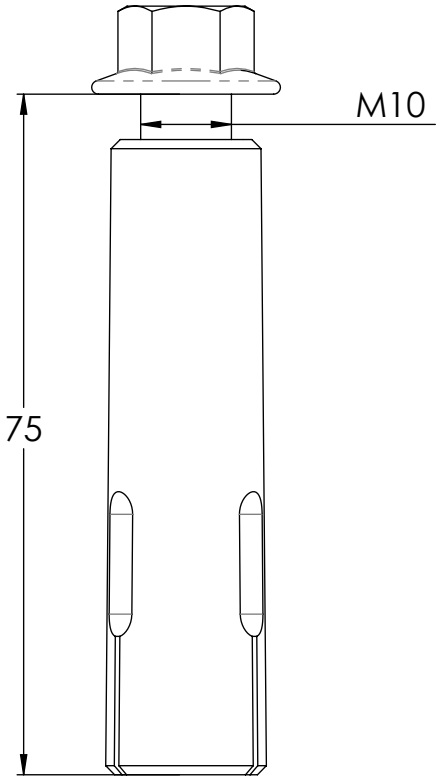

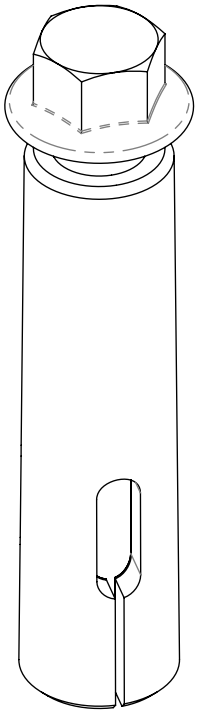

APPLICATION

The wall fixing is used in pairs in conjunction with a Wall Clamp.

COMPONENT SPECIFICATION

Material	Stainless Steel AISI 316L
Finish	Electropolished
Weight	0,064

Technical Datasheet No: 0047

SGEU600PC - EUROPEAN GATE - GALVANISED

Part No: SGEU600GV

Short Part No: SGEU600GV

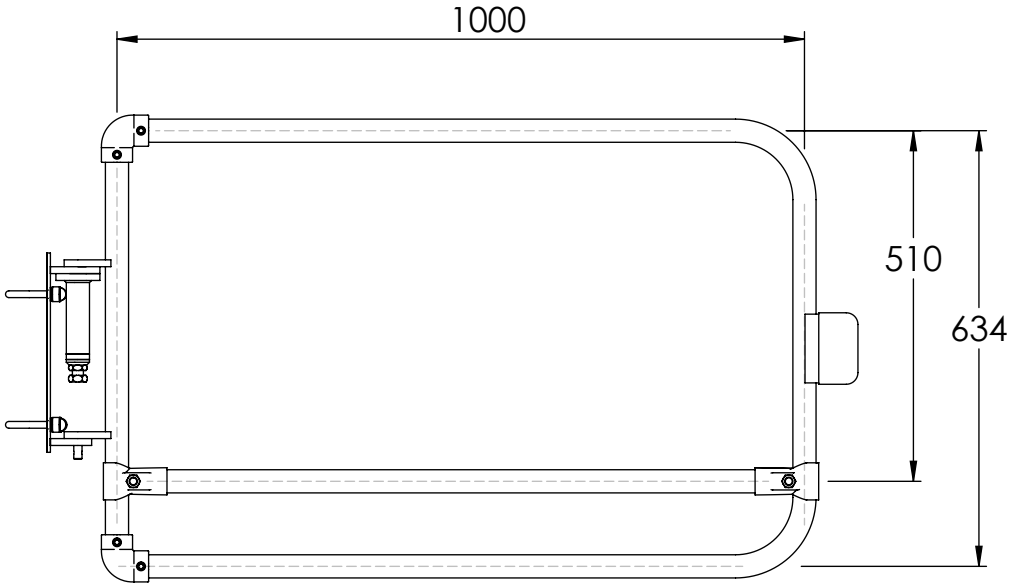

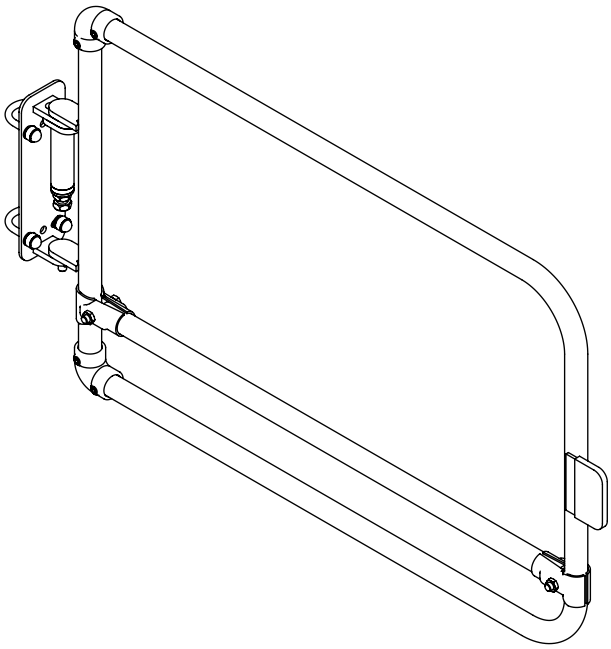

APPLICATION

Spring Loaded, self-closing safety gate. Manufactured from steel to EN 10255. 33.7mm diameter tube x 3.2mm wall thickness to meet requirements of EN 13374 & EN 14122. Complete with fixing pack.

COMPONENT SPECIFICATION

Material	Galvanised Steel
Finish	Galvanised to BS EN ISO 1461.
Weight	11.00

Technical Datasheet No: 0048

SGEU600PC - EUROPEAN GATE - POWDER COATED

Part No: SGEU600PC

Short Part No: SGEU600PC

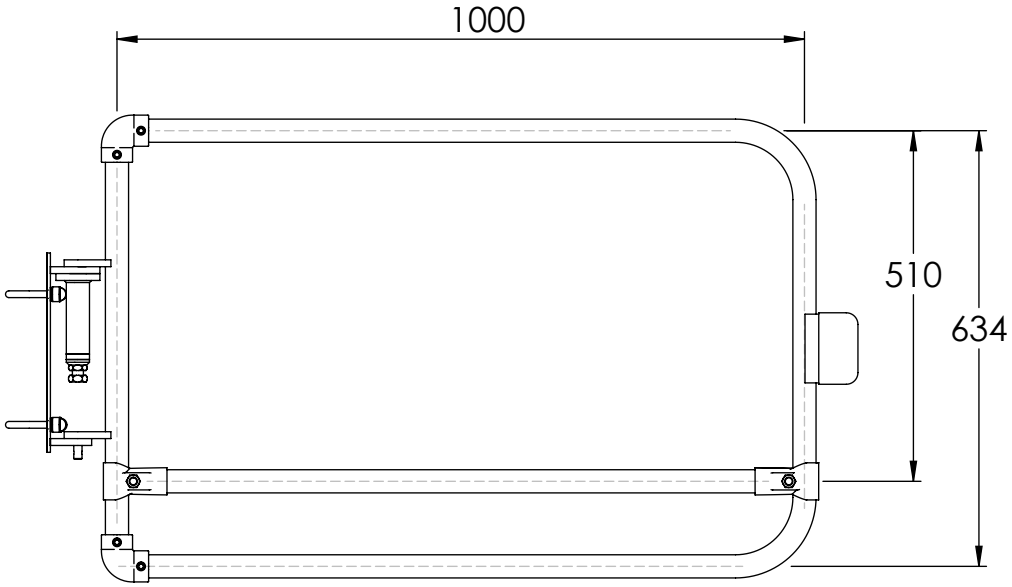

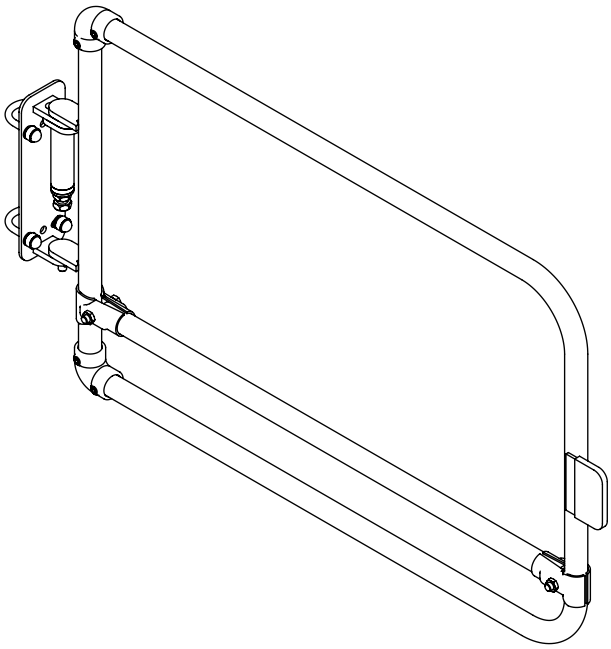

APPLICATION

Spring Loaded, self-closing safety gate. Manufactured from steel to EN 10255. 33.7mm diameter tube x 3.2mm wall thickness to meet requirements of EN 13374 & EN 14122. Complete with fixing pack.

COMPONENT SPECIFICATION

Material	Steel to EN 10255
Finish	Powder Coated Finish to EN 13438
Weight	11.00

Technical Datasheet No: 0049

TBFP1 - TOEBOARD FIXING PACK 1

Part No: TB255FP01

Short Part No: TBFP1

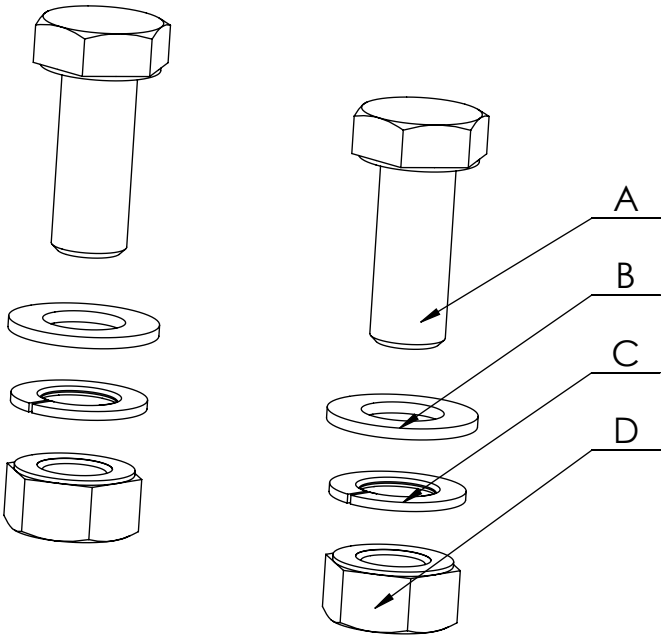

ITEM NO.	PART NO.	DESCRIPTION	QTY.
A	511M10025150	M10 x 25mm HEAD SCREW A4-70 S/S	2
B	531M10000150	M10 FLAT WASHER FORM A A4-70 S/S	2
C	531M10000250	M10 SPRING WASHER TYPE A A4-70 S/S	2
D	521M10000150	M10 FULL NUT A4-70 S/S	2

APPLICATION

Fixings used to fix Toeboard with the fittings.

COMPONENT SPECIFICATION

Material	Stainless Steel
Finish	Electropilish
Weight	0.08

Technical Datasheet No: 0050

TB150 - ALUMINIUM TOEBOARD EXTRUSION

Part No: L01500330

Short Part No: TB150

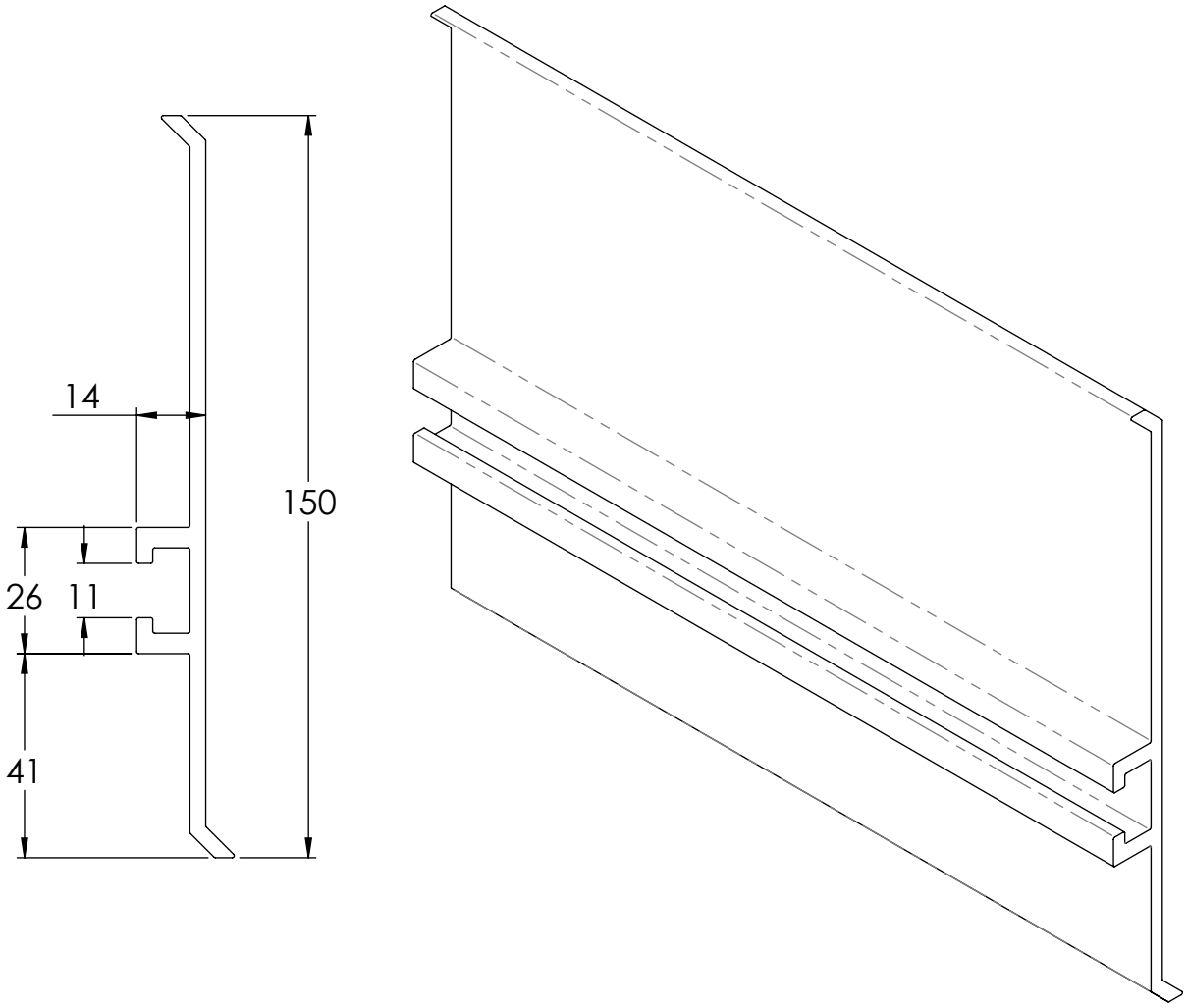

APPLICATION

Toeboard is required on a railing whenever it would be potentially hazardous for an object to fall from the edge. The Toeboard can be used with fitting Type 130 or alternatively with the 69 or L69 (aluminium) Railing Flange. A channel in the Toeboard accepts the bolt head of the mounting hardware, allowing ease of placement. It can be supplied anodised if required.

COMPONENT SPECIFICATION

Material	ALUMINIUM ALLOY 6063-T6
Finish	Natural
Weight	1,63/M

Technical Datasheet No: 0051

TB2 - TOEBOARD CONNECTOR PLATE STRAIGHT

Part No: TB2555030

Short Part No: TB2

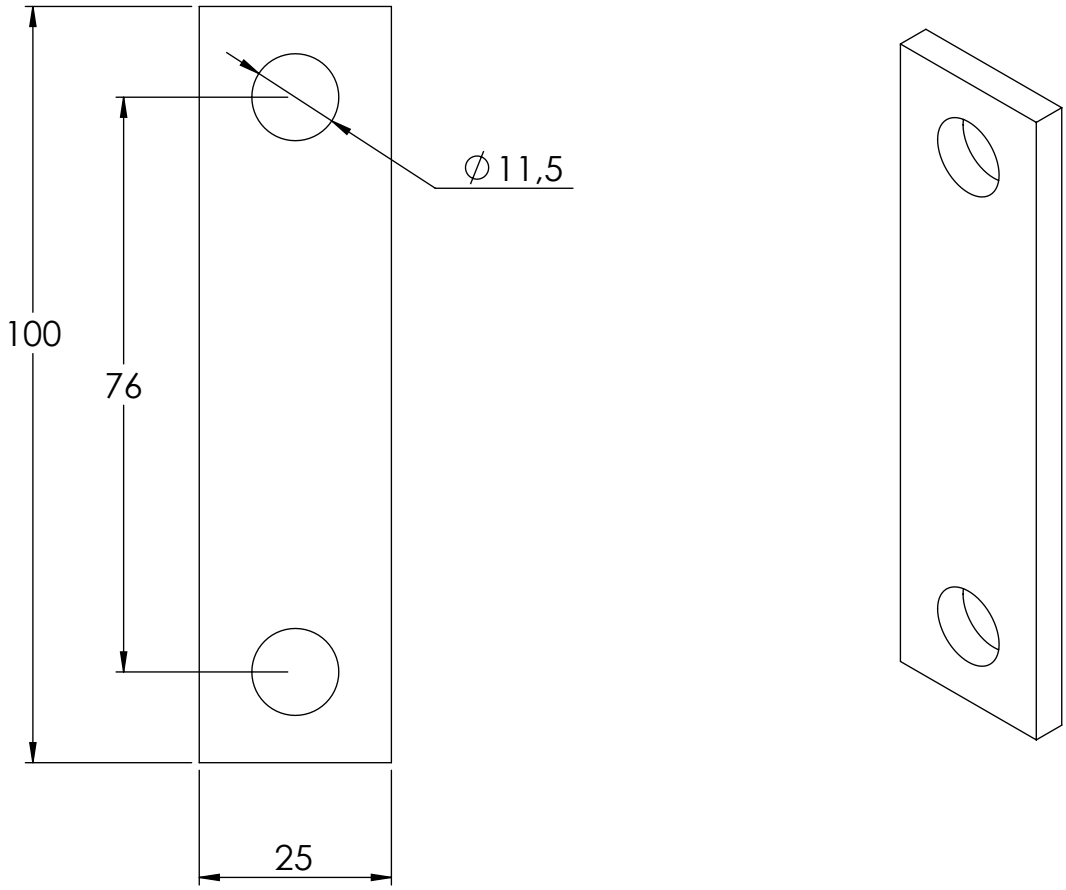

APPLICATION

Bracket allows connect toeboards extrusions.

COMPONENT SPECIFICATION

Material	ALUMINIUM ALLOY 6082-T4
Finish	Natural
Weight	0.03

Issue Date: 30/05/2017

Issue No: 1

Technical Datasheet No: 0052

TB2C - TOEBOARD CONNECTOR PLATE 90 DEG CORNER

Part No: TB2559030

Short Part No: TB2C

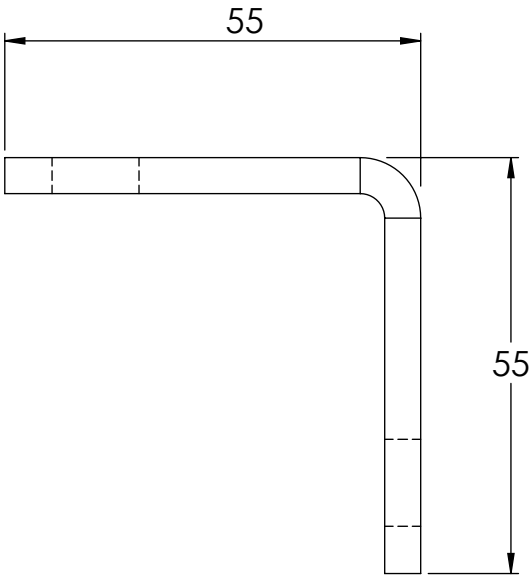

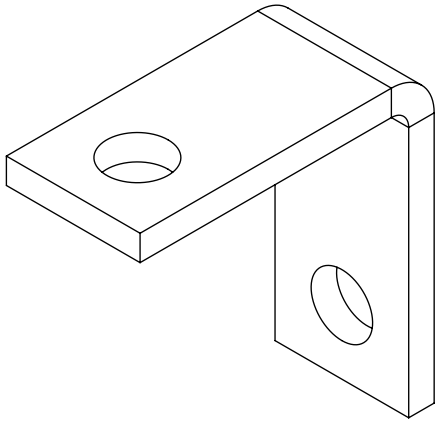

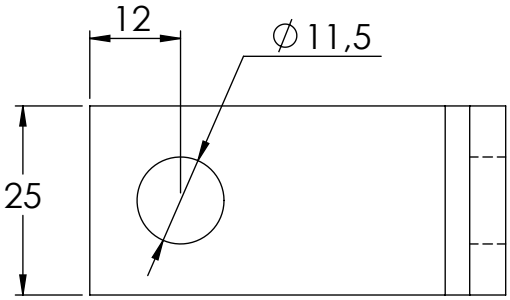

APPLICATION

Bracket allows connect toeboards extrusion at 90deg angle.

COMPONENT SPECIFICATION

Material	ALUMINIUM ALLOY 6082-T4
Finish	Natural
Weight	0.03

Issue Date: 30/05/2017

Issue No: 1

Technical Datasheet No: 0053

MAIN RAIL TUBE 3,2MM - EN 14122-3

Part No: 8610 6,4m / 8614HL 3,2m / 8610213 2,133m

Short Part No: 8-6-G 6,4m / 8-6-GHL 3,2m / 8610213 2.133m

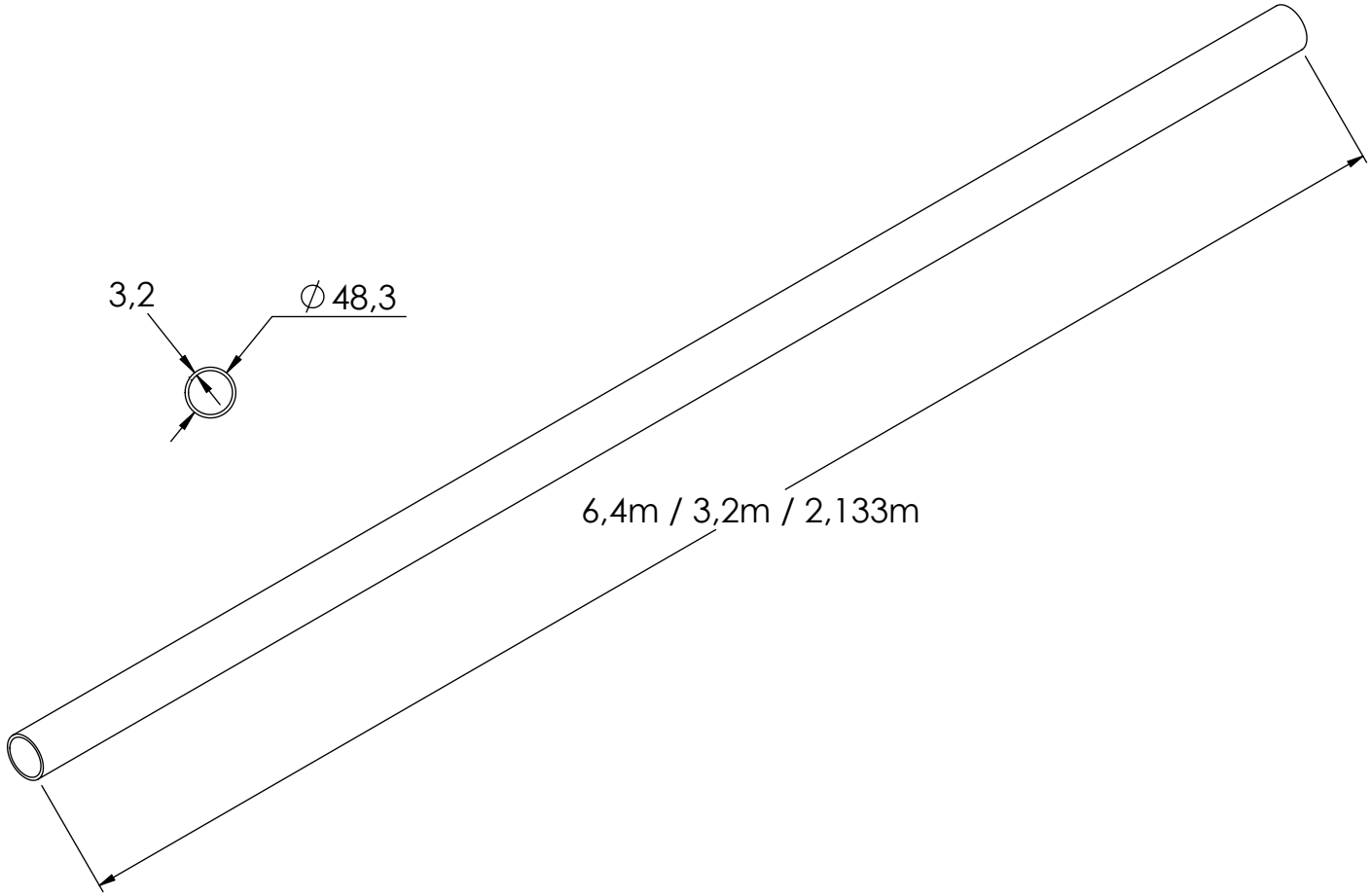

APPLICATION

Supplied in three sizes for convenience, these components provide the horizontal rails of the system. Guardrail top and intermediate rails are produced in steel - 48.3mm external diameter.

COMPONENT SPECIFICATION

Material	Steel Tubing to BS EN 10255 3,2mm
Finish	Galvanised to BS EN ISO 1461
Weight	22.9 / 11,45 / 7,6

Technical Datasheet No: 0054

MAIN RAIL TUBE 2,9MM - EN13374

Part No: 8310 6,4m / 8310HL 3,2m / 8310213010 2,133m

Short Part No: 8310 6,4m / 8-3-GHL 3,2m / 8310213 2.133m

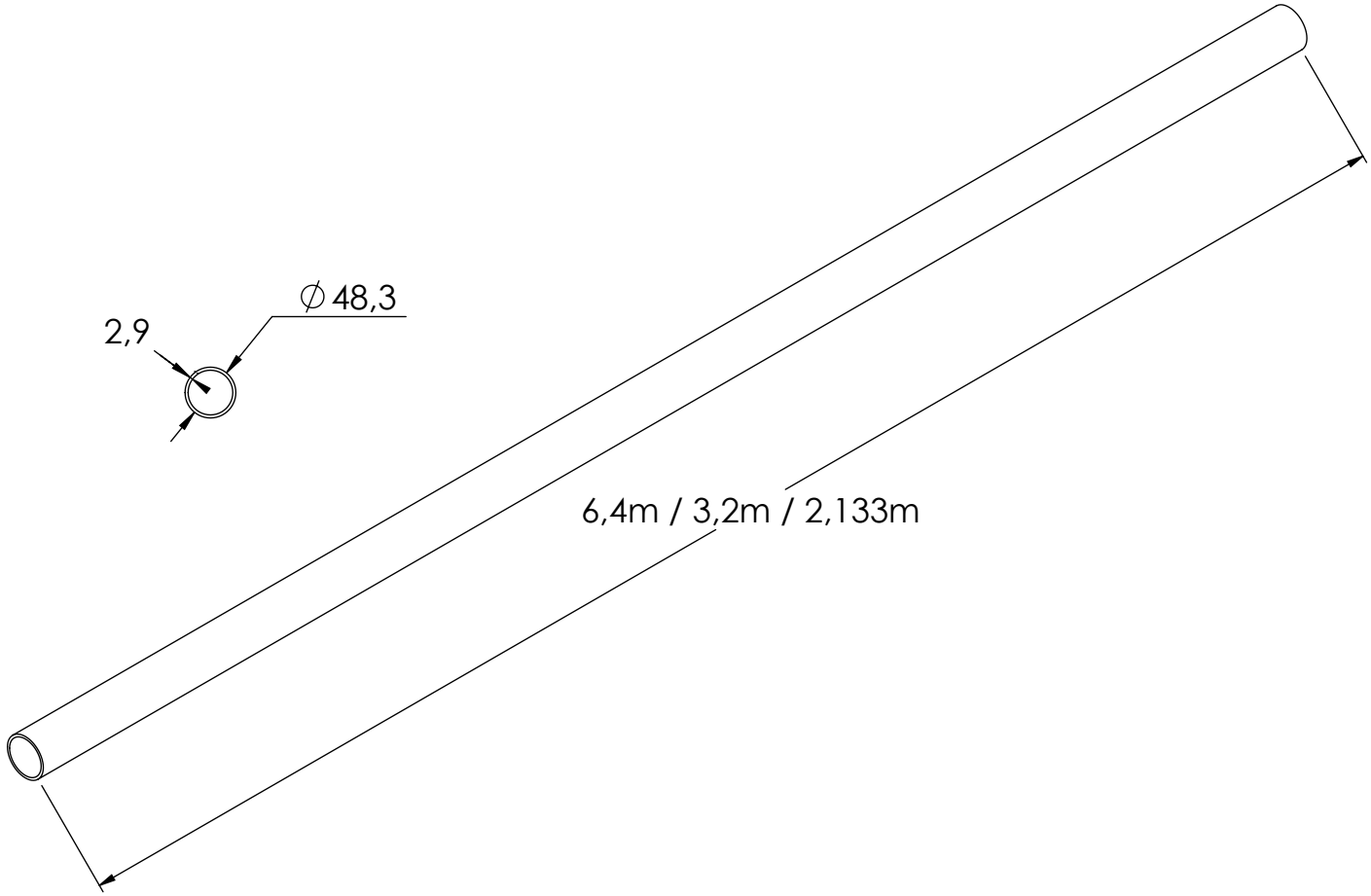

APPLICATION

Supplied in three sizes for convenience, these components provide the horizontal rails of the system. Guardrail top and intermediate rails are produced in steel - 48.3mm external diameter.

COMPONENT SPECIFICATION

Material	Steel Tubing to BS EN 10255 2,9mm
Finish	Galvanised to BS EN ISO 1461
Weight	20.9 / 10,40 / 6,94

Technical Datasheet No: 0055

CBT1 CANTILEVER TUBE

Part No: KGA417210

Short Part No: CBT1

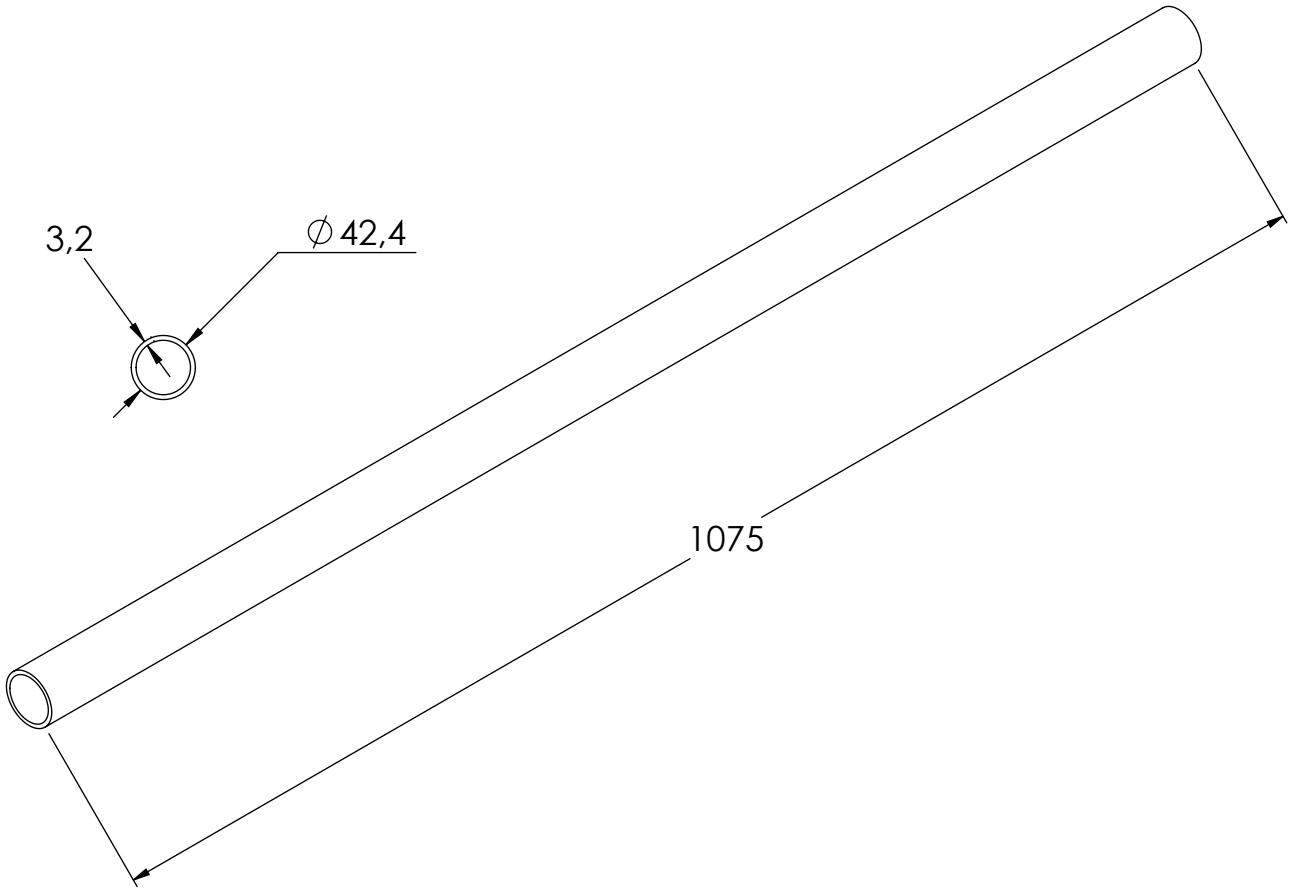

APPLICATION

This component provides the link between the Counter Weight and Base Foot.

COMPONENT SPECIFICATION

Material	Steel tubing to EN 10255 - 3.2mm
Finish	Galvanised to BS EN ISO 1461
Weight	2.11

Issue Date: 09/05/2017

Issue No: 1

Technical Datasheet No: 0056

CBT2 CANTILEVER TUBE

Part No: KGA427210

Short Part No: CBT2

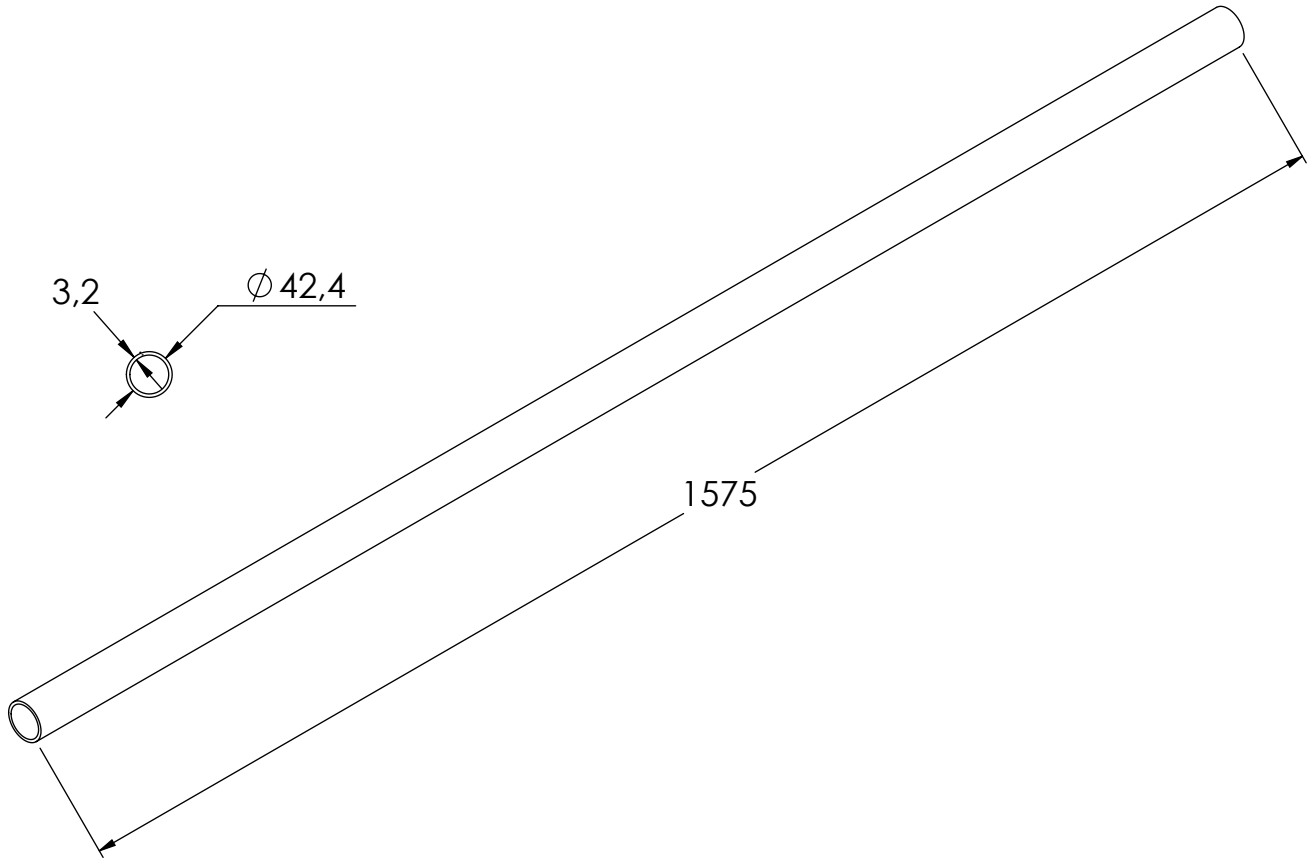

APPLICATION

This component provides the link between the Counter Weight and Base Foot.

COMPONENT SPECIFICATION

Material	Steel tubing to EN 10255 - 3.2mm
Finish	Galvanised to BS EN ISO 1461
Weight	3.09

Technical Datasheet No: 0057

CBT3 SMALL CANTILEVER TUBE/COUNTER WEIGHT LINK

Part No: KGA437210

Short Part No: CBT3

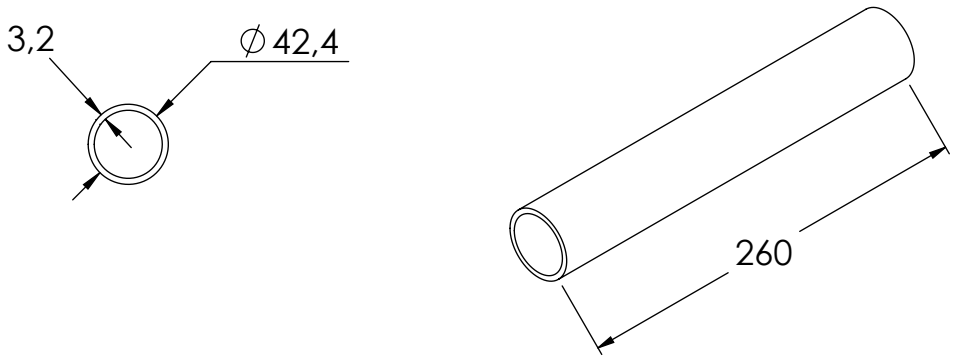

APPLICATION

This component provides the link between the Counter Weight and Base Foot.

COMPONENT SPECIFICATION

Material	Steel tubing to EN 10255 - 3.2mm
Finish	Galvanised to BS EN ISO 1461
Weight	0.51