NOTES	A1

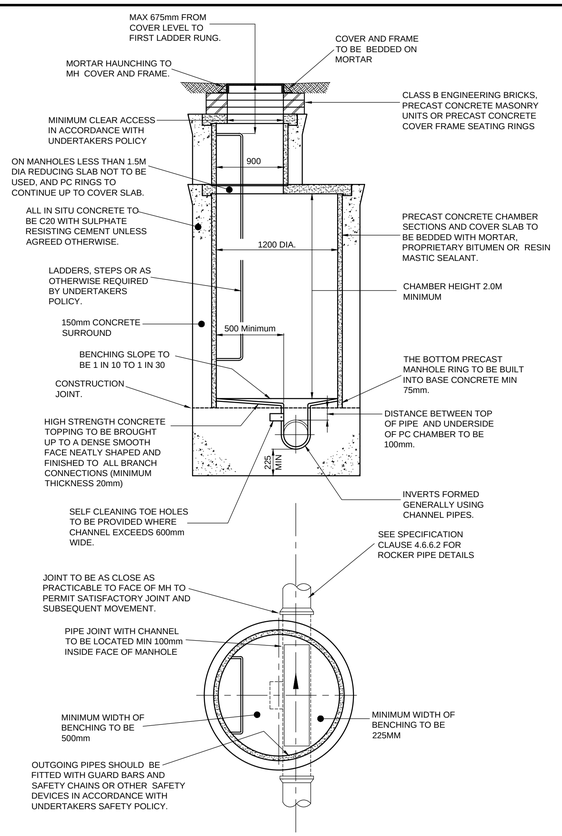

TYPICAL MANHOLE DETAIL-TYPE A

MAX DEPTH FROM GROUND LEVEL TO SOFFIT OF PIPE 3.0M TO 6.0M

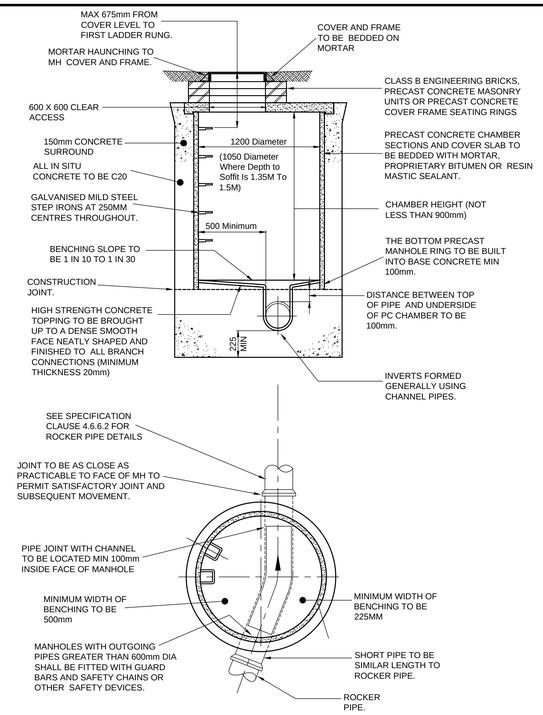

TYPICAL MANHOLE DETAIL-TYPE B

MAX DEPTH FROM GROUND LEVEL TO SOFFIT OF PIPE 3.0M

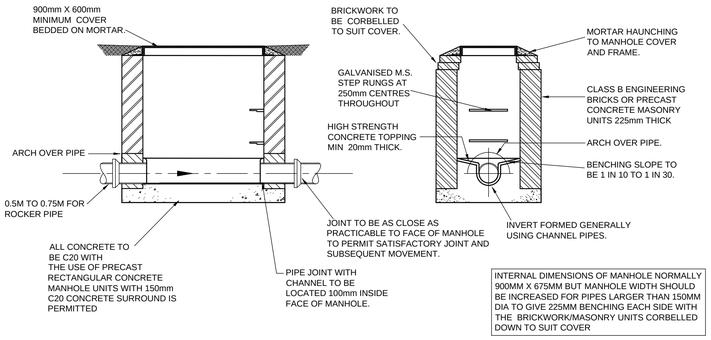

TYPICAL MANHOLE DETAIL-TYPE D.

DEPTH FROM GROUND LEVEL TO SOFFIT OF PIPE LESS THAN 1.00M.

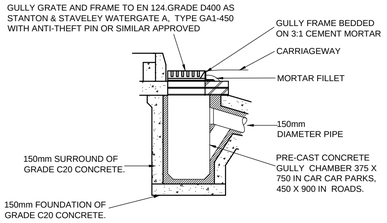

GULLY DETAIL

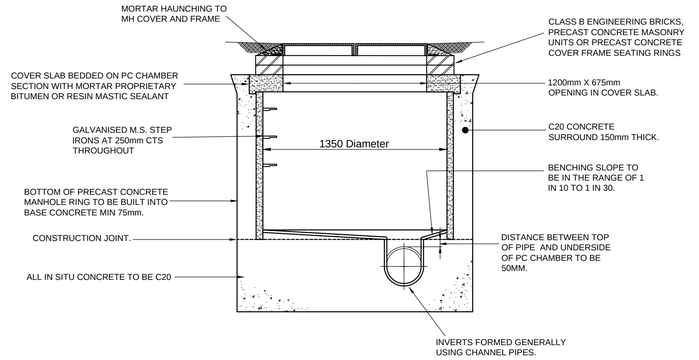

TYPICAL MANHOLE DETAIL-TYPE E

DEPTH FROM GROUND LEVEL TO SOFFIT OF PIPE 1.0M TO 1.45M.

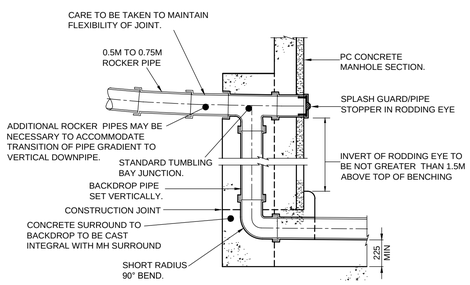

TYPICAL VERTICAL BACKDROP DETAIL

NOTE: STEEPER GRADIENTS ARE PREFERRED TO THE USE OF BACKDROPS. WHERE THE DROP IS NOT EXCESSIVE A 45 DEGREE DROP PIPE MAY BE USED.

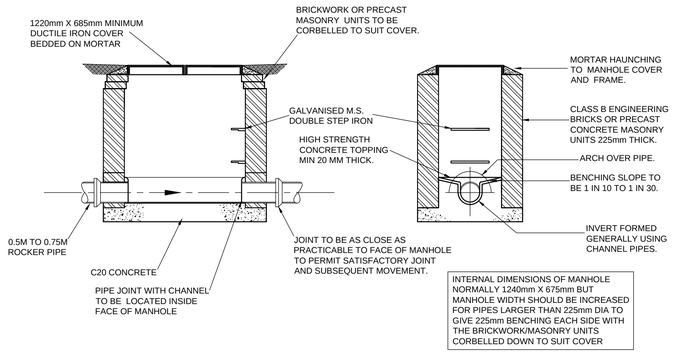

TYPICAL MANHOLE DETAIL-TYPE C.

DEPTH FROM GROUND LEVEL TO SOFFIT OF PIPE 1.0M TO 1.45M.

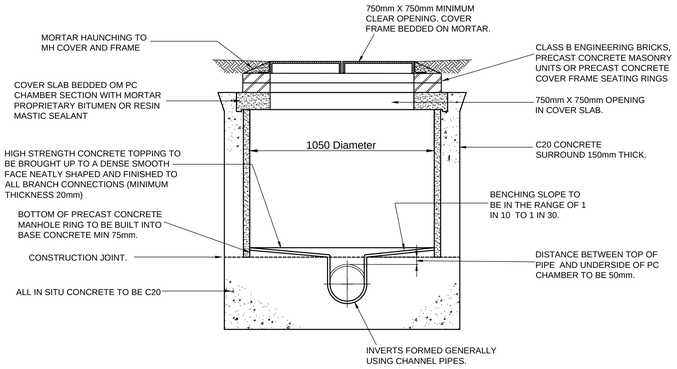

TYPICAL MANHOLE DETAIL-TYPE F

DEPTH FROM GROUND LEVEL TO SOFFIT LESS THAN 1.0M.

SELECTION OF THIS TYPE OF MANHOLE RESTRICTED TO LOCATIONS WHERE GRADE B COVERS ARE TO BE USED

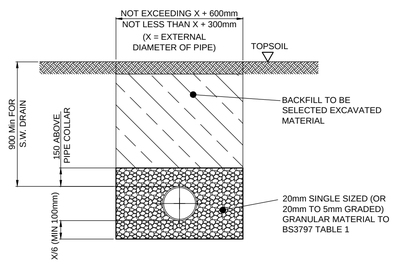

GRANULAR BED DETAIL 1.

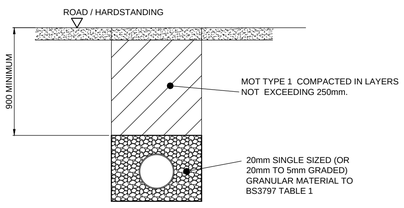

CLASS S - BED DETAIL 2.

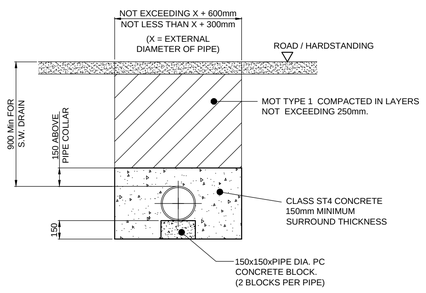

CONCRETE BED DETAIL 3.

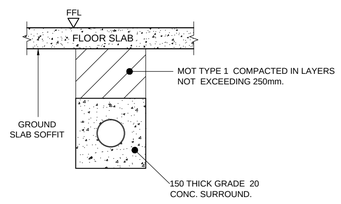

PIPES UNDER BUILDINGS 4.

PIPE BEDDING DETAILS

PIPE BEDDING DETAILS

1. UNDER SOFT LANDSCAPING PROVIDE GRANULAR BED DETAIL.
2. UNDER ROADS AND HARDSTANDINGS WHERE PIPE HAS OVER 0.9 M COVER PROVIDE CLASS S BEDDING.
3. UNDER ROADS AND HARDSTANDINGS WHERE PIPE HAS LESS THAN 0.9 M COVER PROVIDE CONCRETE BED DETAIL.
4. WHERE PIPES PASS UNDER BUILDINGS THEY SHALL BE SURROUNDED IN CONCRETE AND HAVE MoT TYPE 1 BACKFILL.

THIS DRAWING TO BE READ IN CONJUNCTION WITH SCA DRAWING 1747-4/1

Rev.	Description	By	Date

Client
CHICKEN CABINS LTD.

Site address
KFC DRIVE THROUGH
SECTION OF TESCO CAR PARK
ALTRINCHAM ROAD, BAGULEY.
MANCHESTER, M23 9TJ.

Title
DRAINAGE DETAILS
(SHEET 2 OF 2)

Stevenson Calam Associates
CONSULTING ENGINEERS
ORNHAMS HALL, BOROUGHBRIDGE,
NORTH YORKSHIRE. YO51 9JH.
Telephone (01423) 530999
Facsimile (01423) 520028
Email: stevenson.calam@btconnect.com
SCA

Project Manager/ Checked	Drawn By	Scale	Date
	NC	AS SHOWN	FEB. 2022
Arch./Des. GS	Drawing Number 1747-4/2		Rev.