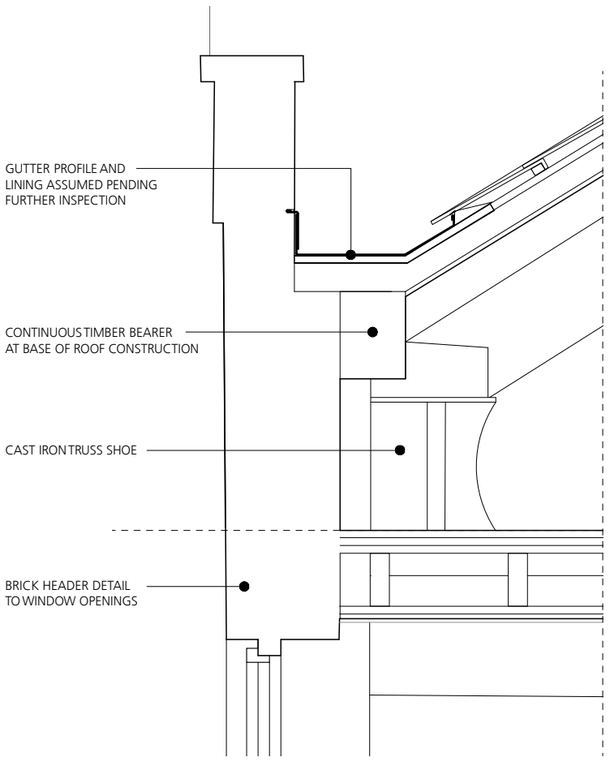

DETAIL E1

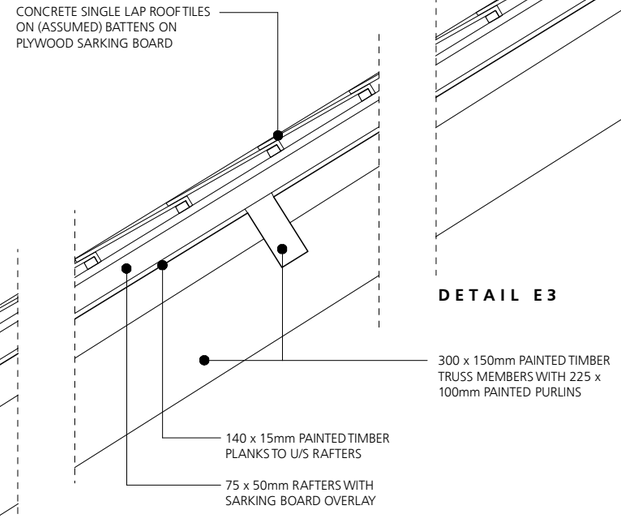

DETAIL E2

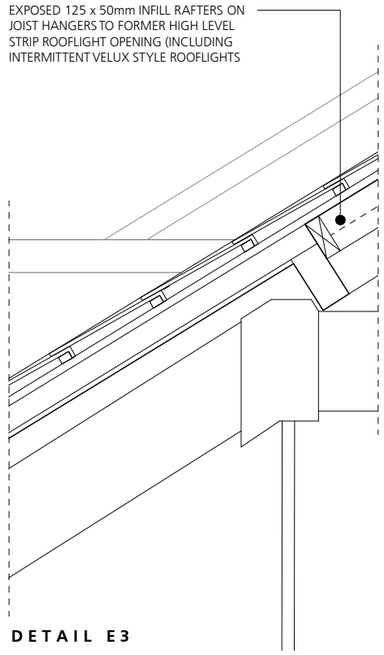

DETAIL E3

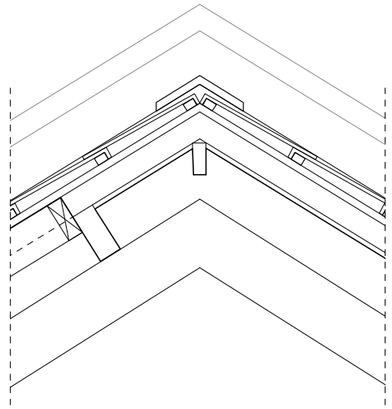

DETAIL E4

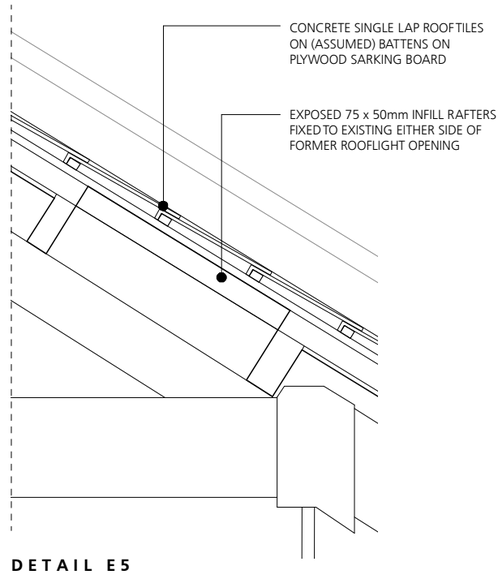

DETAIL E5

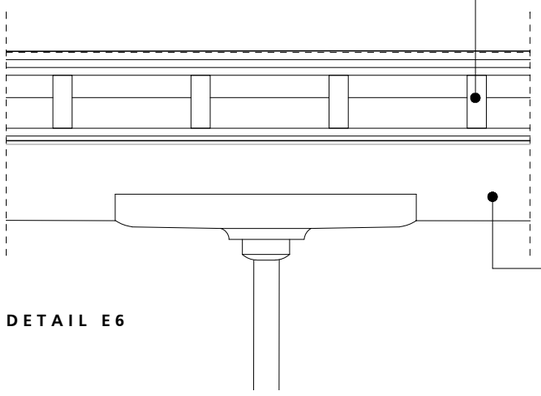

DETAIL E6

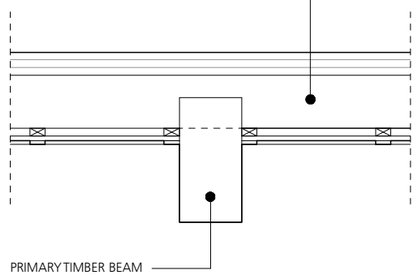

DETAIL E7

0 0.5 1.0
metres

Jonathan Davidson Architects
Architecture & Industrial Design
47 Hilton Street
MANCHESTER
M1 2EF
t: 0161 711 0835
e: inbox@jdavidsonarchitects.com
w: www.jdavidsonarchitects.com

Client	Capital & Centric
Project	**Neptune Mill** **Chapeltown St, Manchester**
Scale	1:20 @ A3
Date	Apr 2023
Document	**General Arrangement** **Existing Fabric Details**
Status	For information
Doc Ref	353 CD 0014 T1