exitex™

Joinery Seals & Glazing

For Timber Windows & Doors

All Exitex sealing and glazing systems are manufactured to the highest standards, incorporating many unique patented features.

Quality you can trust

Aluminium
Hardened High Tensile
to BS 1474

Anodising
15-25 Micrometers
BS 3987

Powder Coating
60-80 Micrometers
BS 6496

EPDM
Gaskets to BS 4255

EPDM
Cellular Rubber
Gaskets to
SS 243705A1, SS81813

PVC
Gaskets to BS 7412

Joinery Seals & Glazing

For Timber Windows & Doors

Contents

Aquatex™	4
Weatherseals for Sliding Sash Windows	10
Self Adhesive Seals	20
Joinery Seals Wiper	21
Joinery Seals Compression	22
Aluminium Glazing Beads & Accessories	28
Self Adhesive EPDM Dry Glaze Profiles	31
Glazing Wedge Gasket for Secret Nailing	32
Push Fit & Single Sided Glazing Gaskets	34
Double Sided Tapes	35
Tilt & Turn Weatherbar	38
Securbead	40
Lokbead	42
Timber Bead Glazing Clips	44
Glazing Accessories	46
Intumescent Seals	48
Automatic Door Bottom Seals	51

High Performance Weatherseals for Windows & Doors

Key Performances	Materials
Temperature Range: -40°C to +70°C. Compression Set: <15% UV Stability: 5000 hrs QUV tester. UVB 313 bulb. (4hrs light / 4hrs dark cycle)	Outer skin. Polyethylene. (Properties include: inert, low friction, UV stable, colour options) Foam Core. Polyurethane. (Properties include: excellent memory over extended temp range) Inserts. Polypropylene (Properties include: longitudinal stability and secure fixing)

Features

- P.U. foam core provides excellent recovery after long-term deflection.
- Working temperature range -40°C to +70°C
- Thicker polyethylene outer sheathing improves resistance to wear & tear.
- Deflection ranges to cope with tolerance & seasonal movement of seal gap.
- Excellent UV stability.
- Outer skin not affected by paints & stains.
- Aquatex™ does not propagate mould growth or mildew.
- Standard colours brown, white & black.

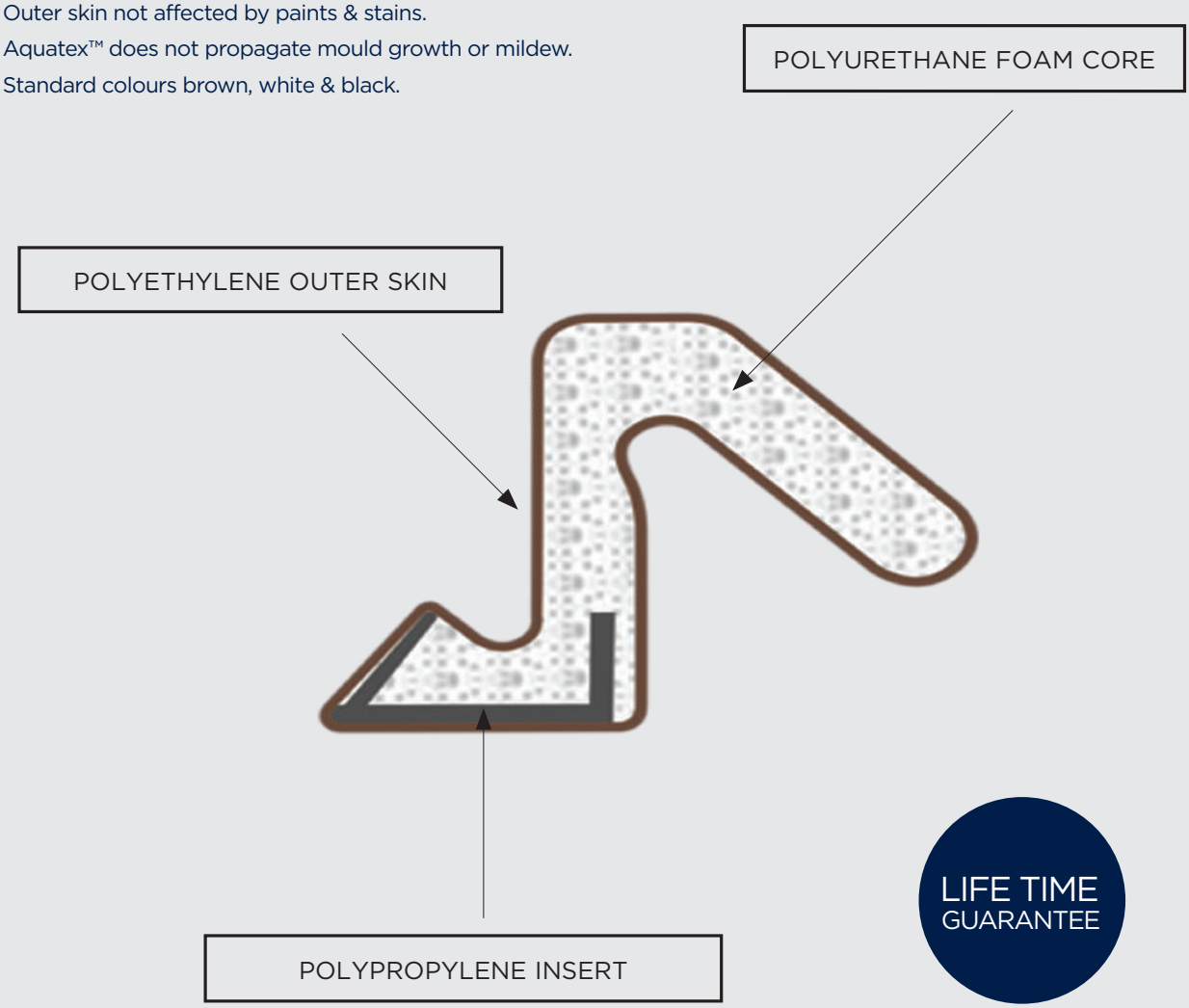

LIFE TIME GUARANTEE

Aquatex A15

Seals gaps 9 - 15mm
Conforms to BS 12365-12003
Classification W72560
2.1m Lengths, 125L/Box
Available in white, brown & black

Ref: 1.27.0065

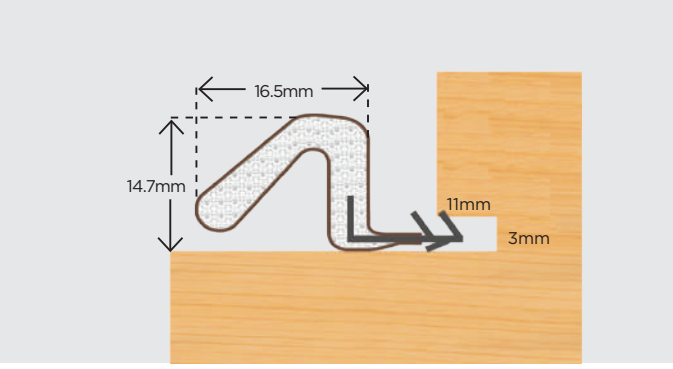

Aquatex A14

Seals gaps 10 - 15mm
Conforms to BS 12365-12003
Classification W72560
2.1m Lengths, 150L/Box
Available in white, brown & black

Ref: 1.27.0189

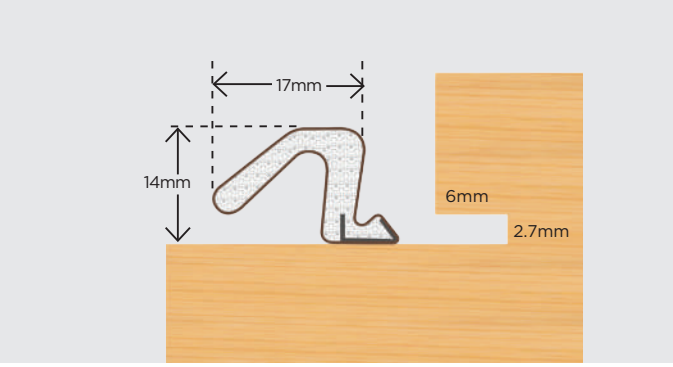

Aquatex A13

Seals gaps 5.5 - 12mm
Conforms to BS 12365-12003
Classification W62560
350m/Box (2 x 175m)
Available in white, brown & black

Ref: 1.28.0700

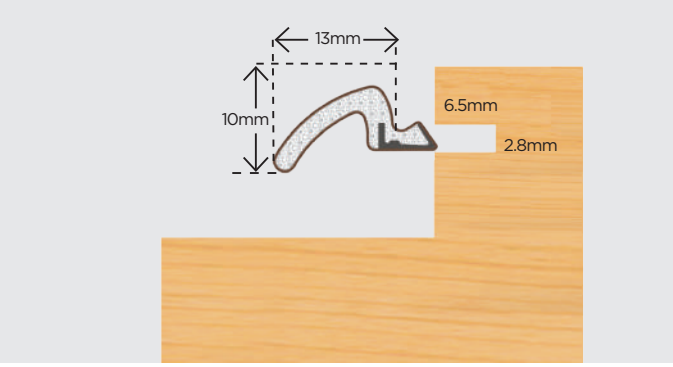

Aquatex A10

Seals gaps 4.5 - 8mm
Conforms to BS 12365-12003
Classification W32560
10m, 25m, 100m, 500m/Box (2 x 250m)
Available in white, brown & black

Ref: 1.27.0021

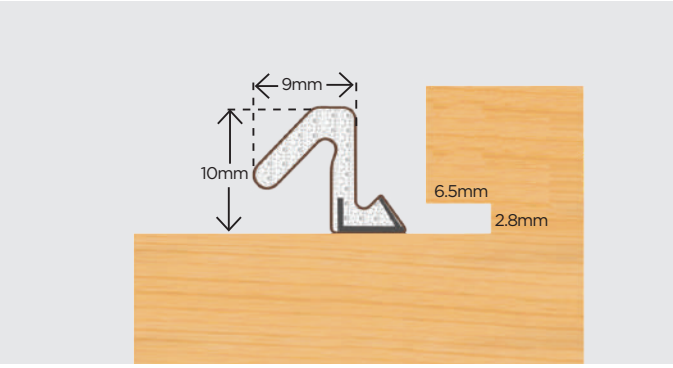

Aquatex A9

Seals gaps 6 - 11.5mm
Conforms to BS 12365-12003
Classification W52560
400m/Box (2 x 200m)
Available in white, brown & black

Ref: 1.27.0569

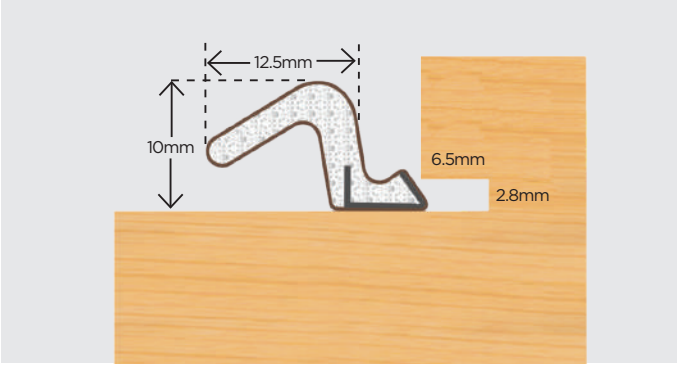

Aquatex A5

Seals gaps 4 - 8.5mm
Conforms to BS 12365-12003
Classification W43560
600m/Box (2 x 300m)
Available in white, brown & black

Ref: 1.27.0562

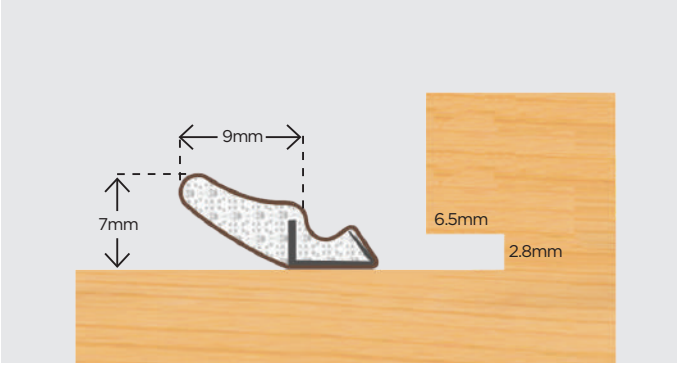

Aquatex P3

Seals gaps 4 - 6.4mm
Conforms to BS 12365-12003
Classification W26560
400m/Box (2 x 200m)
Available in white, brown & black

Ref: 1.27.0033

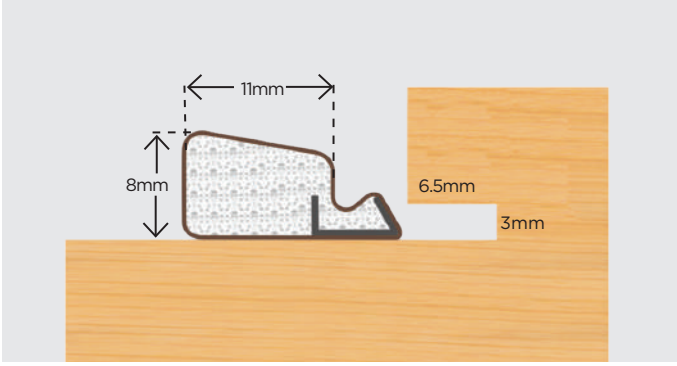

Aquatex P6

Seals gaps 4 - 6mm
Conforms to BS 12365-12003
Classification W23560
600m/Box (2 x 300m)
Available in white, brown & black

Ref: 1.27.0063

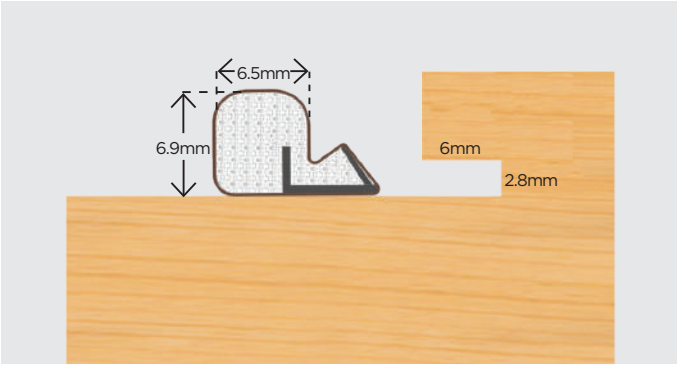

Aquatex P8

Seals gaps 2 - 3.5mm
Conforms to BS 12365-12003
Classification W15560
10m, 25m, 100m, 700m/Box (2 x 350m)
Available in white, brown & black

Ref: 1.27.0048

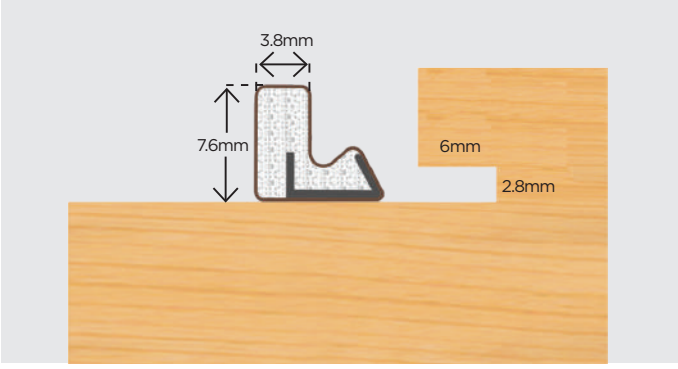

Aquatex P9

Seals gaps 2.8 – 4.5mm
Conforms to BS 12365-12003
Classification W15560
600m/Box (2 x 300m)
Available in white & black

Ref: 1.27.0154

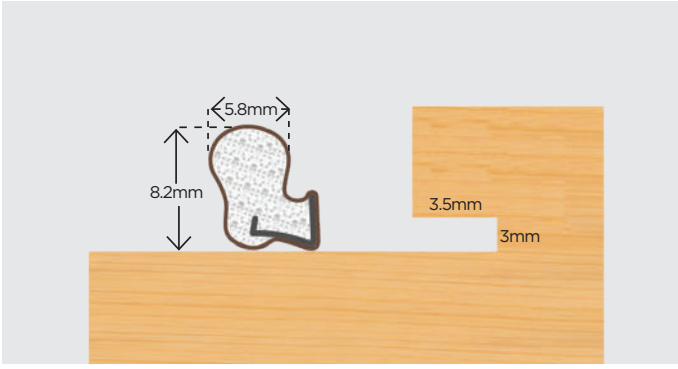

Aquatex P10

Seals gaps 3.5 - 5.5mm
Conforms to BS 12365-12003
Classification W45560
500m/Box (2 x 250m)
Available in white, brown & black

Ref: 1.27.0484

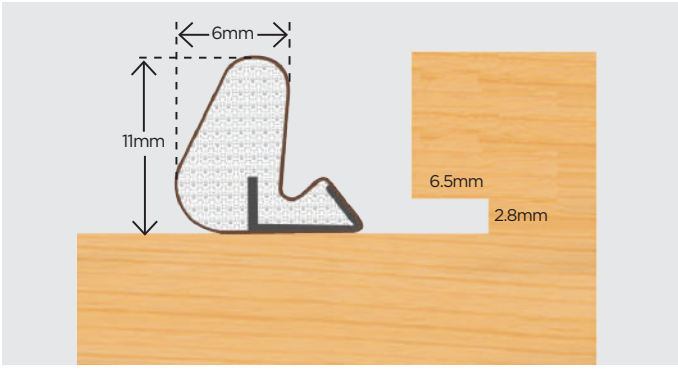

Aquatex P11

Seals gaps 4.5 - 6mm
Conforms to BS 12365-12003
Classification W35560
10m, 25m, 100m, 500m/Box (2 x 250m)
Available in white, brown & black

Ref: 1.27.0109

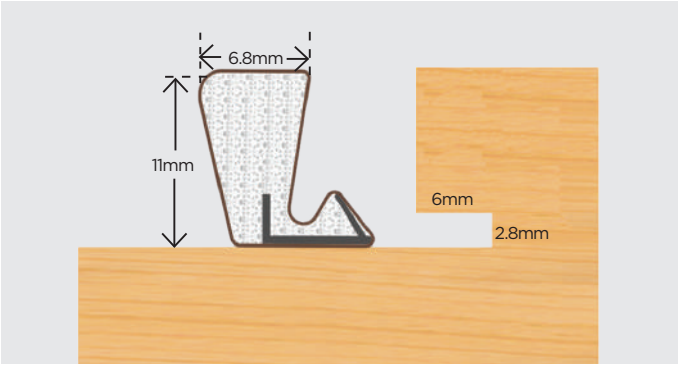

Aquatex S20

Seals gaps 5 - 7.5mm
Conforms to BS 12365-12003
Classification W43560
250m/Box (2 x 125m)
Available in white, brown & black

Ref: 1.27.0124

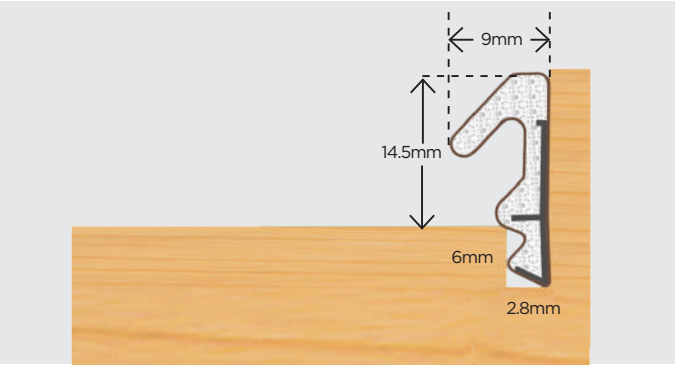

Aquatex S21

Seals gaps 5 - 8mm
Conforms to BS 12365-12003
Classification W33560
300m/Box (2 x 150m)
Available in white, brown & black

Ref: 1.28.0091

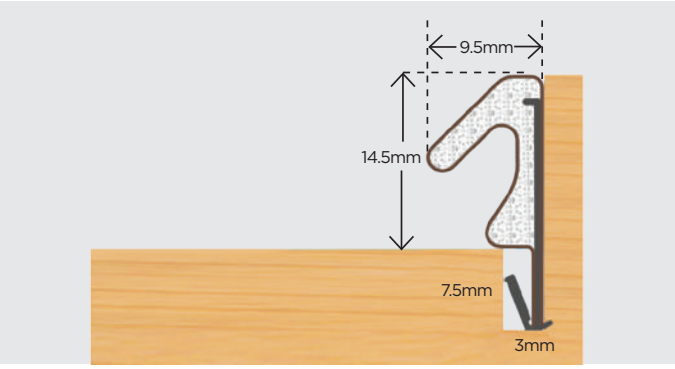

Aquatex S22

Seals gaps 5 - 8mm
Conforms to BS 12365-12003
Classification W33560
300m/Box (2 x 150m)
Available in white, brown & black

Ref:1.27.0310

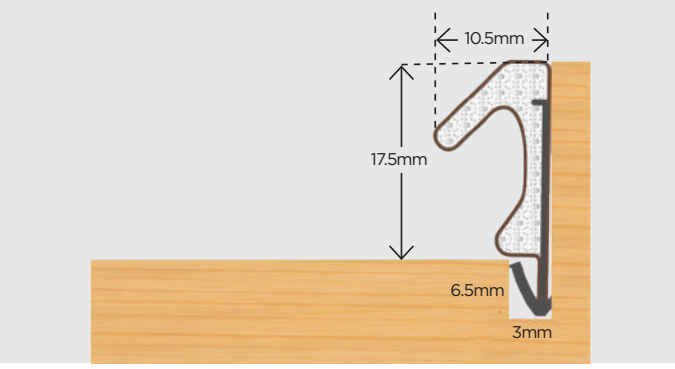

Aquatex S25

Seals gaps 5 - 6.5mm
Conforms to BS 12365-12003
Classification W34560
200m/Box (2 x 100m)
Available in white, brown & black

Ref: 1.28.0097

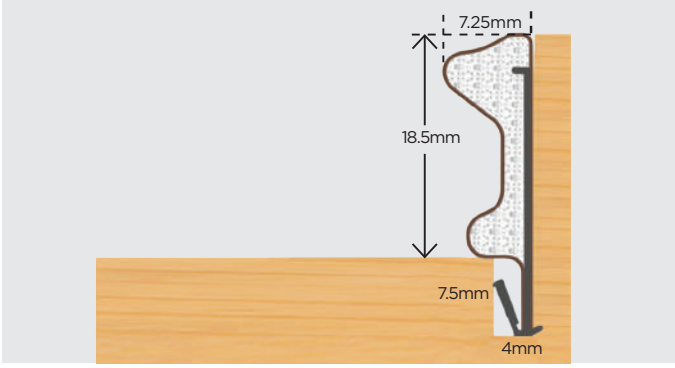

Aquatex D Slot 4.8mm x 5mm

Seals gaps 3.5 - 4.8mm
Conforms to BS 12365-12003
Classification W14560
1220m/Box (2 x 610m)
Available in white, brown & black

Ref: 1.28.0069

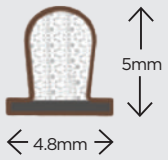

Aquatex D Slot 4.8mm x 6.5mm

Seals gaps 4.5 - 6mm
Conforms to BS 12365-12003
Classification W24560
900m/Box (2 x 450m)
Available in white, brown & black

Ref: 1.28.0070

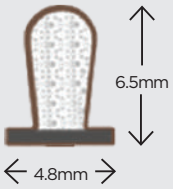

Aquatex D Slot 4.8mm x 7.5mm

Seals gaps 5.5 - 7mm
Conforms to BS 12365-12003
Classification W23560
600m /Box (2 x 300m)
Available in white, brown & black

Ref: 1.28.0071

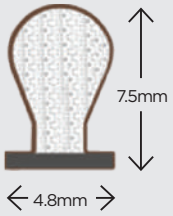

Aquatex D Slot 4.8mm x 9.5mm

Seals gaps 6.5 - 9 mm
Conforms to BS 12365-12003
Classification W24560
600m/Box (2 x 300m)
Available in white, brown & black

Ref: 1.28.0072

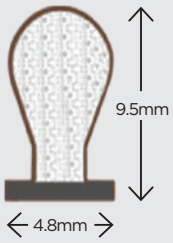

Weatherseals for Sliding Sash Windows

A Pile Carrier, Slidex, Staff Seal

B Parting Bead

C Meeting Rail Pile Carrier

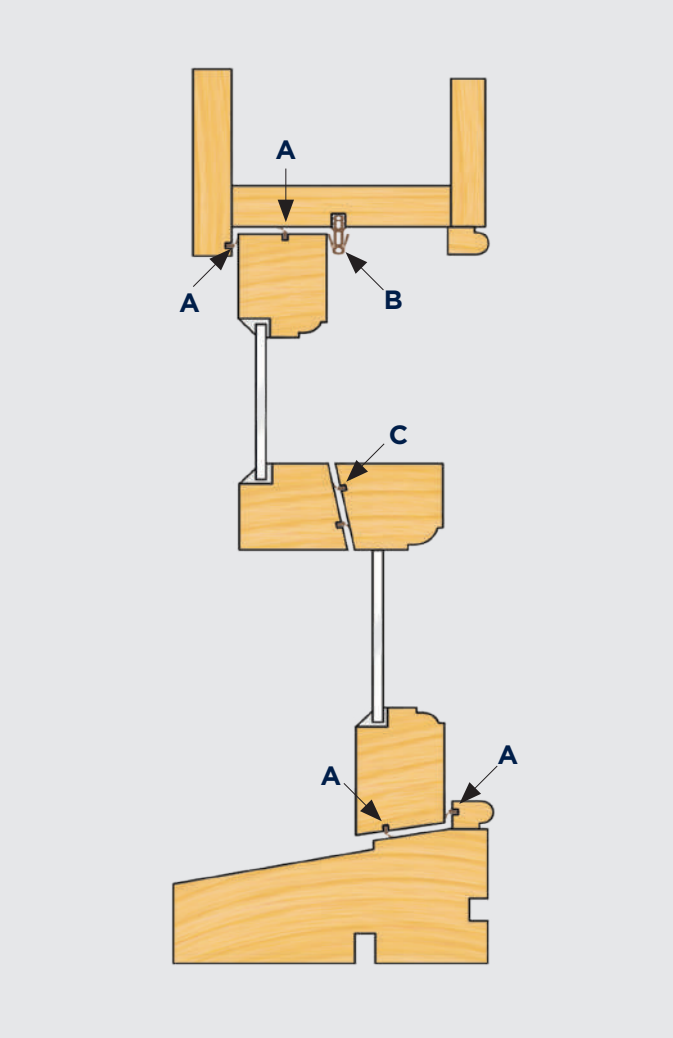

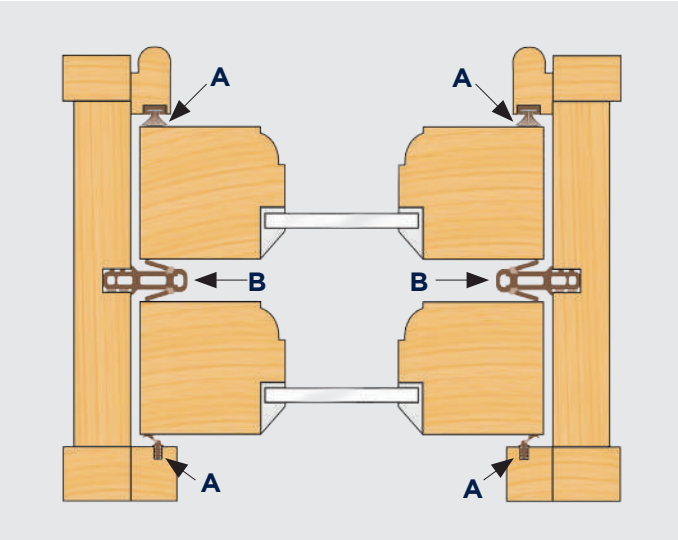

Parflip 12mm

Ref: 1.10.0180

Length – 3m

Available in brown, white & cream

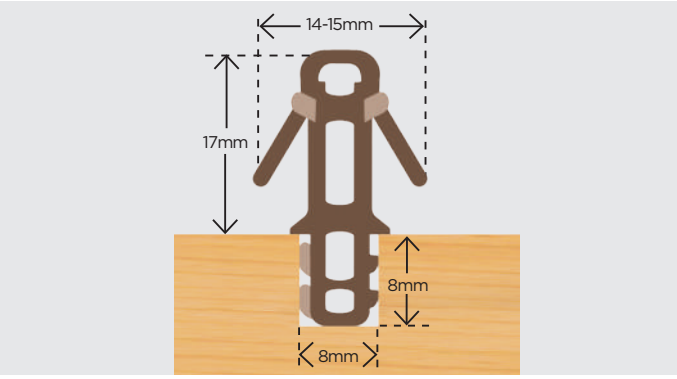

Parflip 16mm

Ref: 1.10.0181

Length – 3m

Available in brown, white & pine

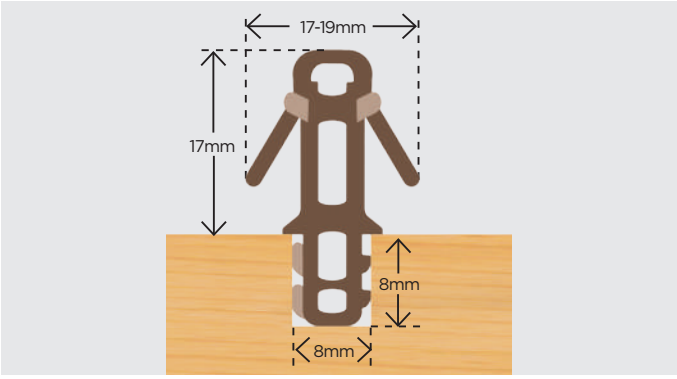

Partex

Ref: 1.10.0175

Length – 3m

Available in brown, white & cream

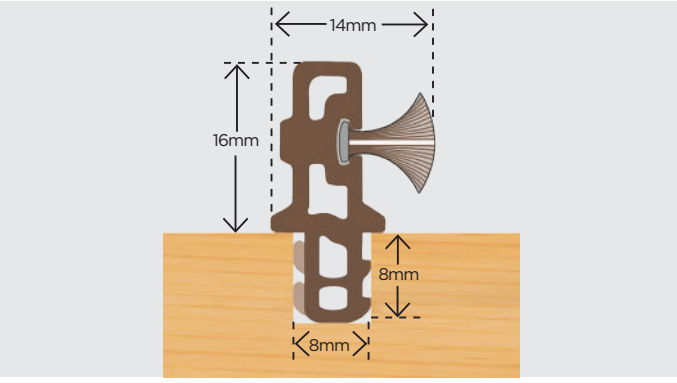

Partex c/w D-slot 4.8mm x 7.5mm

Ref: 1.10.0186

Length – 3m

Available in brown & white

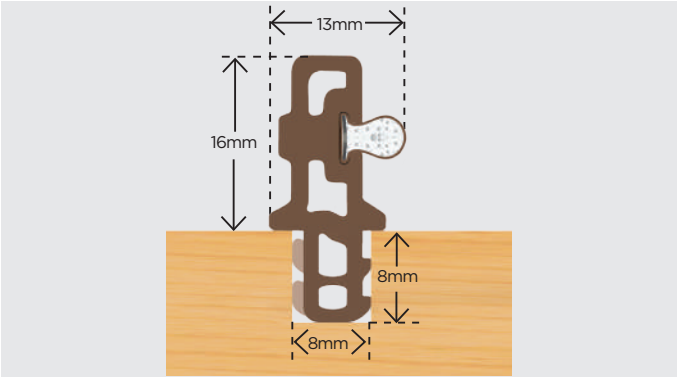

Retaining Profile 10mm for Partex/Parflip

Ref: 1.10.0190

Length – 3m

Available in brown, white & cream

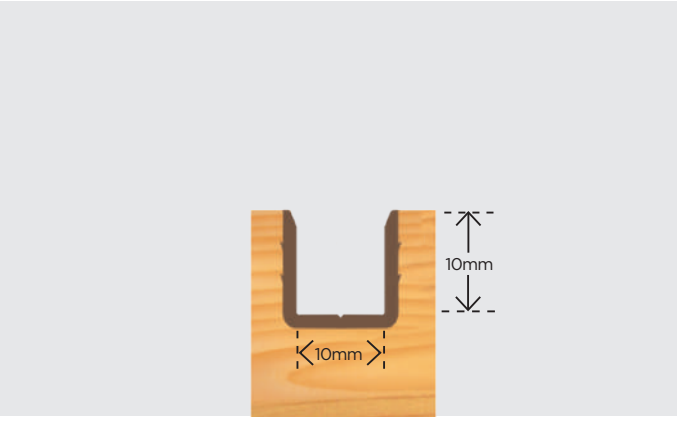

Meeting Rail Pile Carrier c/w 6.5mm Pile & Fin

Ref: 1.10.0425

Length – 3m

Available in brown & white

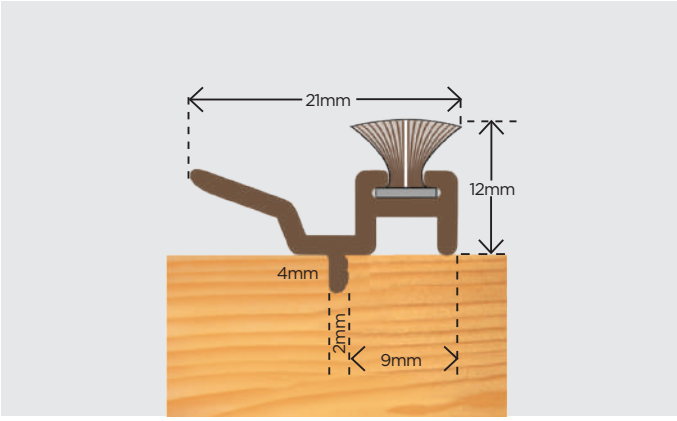

Timber Parting Bead with Pile Carrier 7mm x 25mm / 8mm x 25mm

Length – 3m

Available in – primed & unprimed

Ref: 1.40.0001 (7mm) Ref: 1.40.0002 (8mm)

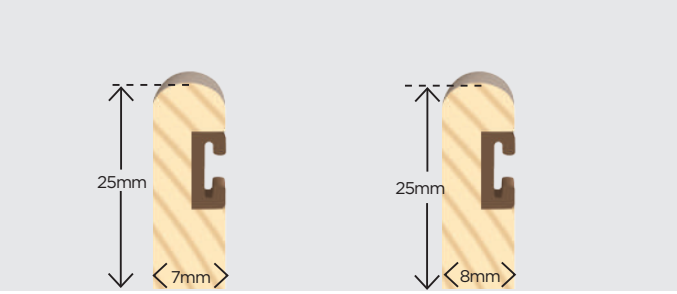

Timber Parting Bead with Carrier & 6.5mm Pile & Fin 7mm x 25mm / 8mm x 25mm

Length – 3m

Available in – primed & unprimed

Ref: 1.40.0003 (7mm) Ref: 1.40.0004 (8mm)

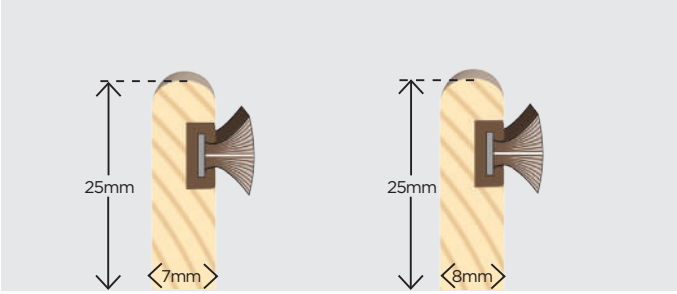

Timber Parting Bead with Pile Carrier 7mm x 28mm / 8mm x 28mm

Length – 3m

Available in – primed & unprimed

Ref: 1.40.0005 (7mm) Ref: 1.40.0006 (8mm)

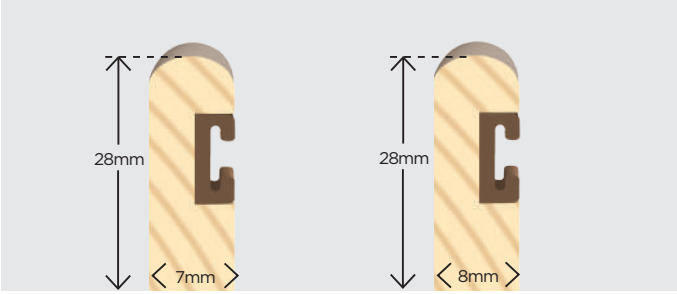

Timber Parting Bead with Carrier & 6.5mm Pile & Fin 7mm x 28mm / 8mm x 28mm

Length – 3m

Available in – primed & unprimed

Ref: 1.40.0007 (7mm) Ref: 1.40.0008 (8mm)

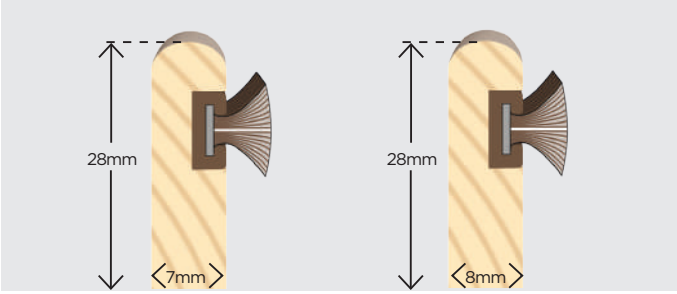

Timber Parting Bead with Pile Carrier 14mm x 22mm

Length – 3m

Available in – primed & unprimed

Ref: 1.40.0009

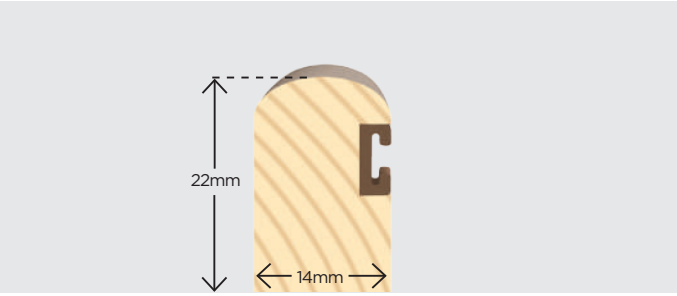

Timber Parting Bead with Carrier & 6.5mm Pile & Fin 14mm x 22mm

Length – 3m

Available in – primed & unprimed

Ref: 1.40.0010

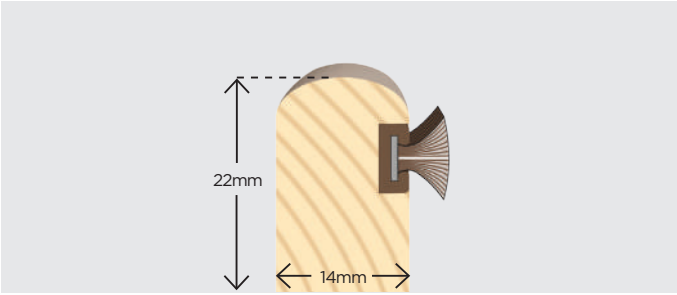

Timber Staff Bead 20mm x 15mm with Pile Carrier

Length - 3m

Available in primed & unprimed

Ref: 1.40.0011

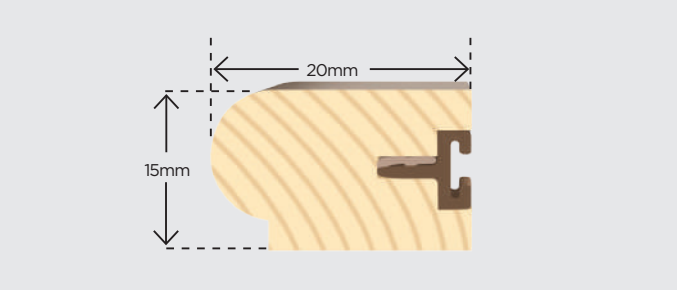

Timber Staff Bead 20mm x 15mm with Carrier & 6.5mm Pile & Fin

Length - 3m

Available in primed & unprimed

Ref: 1.40.0012

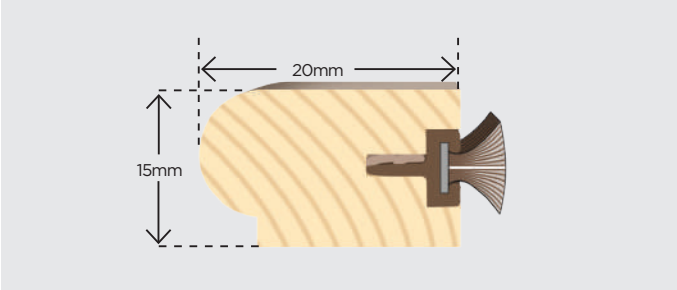

Timber Staff Bead 25mm x 15mm with Pile Carrier

Length - 3m

Available in primed & unprimed

Ref: 1.40.0013

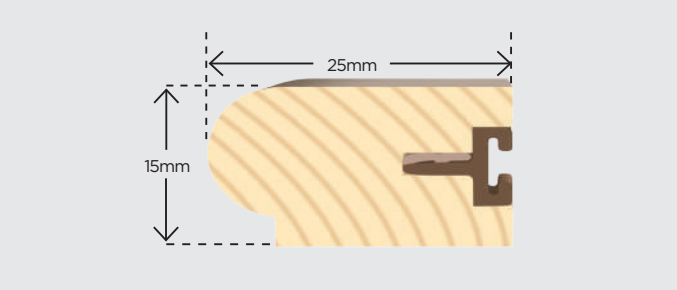

Timber Staff Bead 25mm x 15mm with Carrier & 6.5mm Pile & Fin

Length - 3m

Available in primed & unprimed

Ref: 1.40.0014

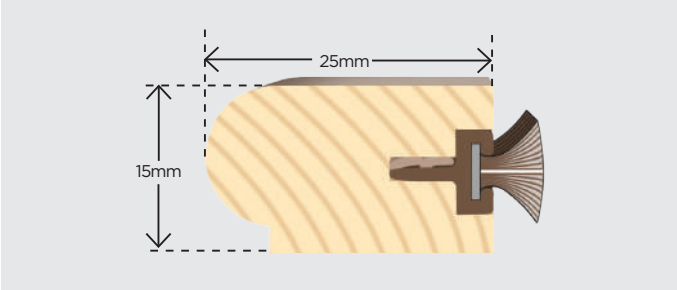

Timber Staff Bead 28mm x 15mm with Pile Carrier

Length - 3m

Available in primed & unprimed

Ref: 1.40.0023

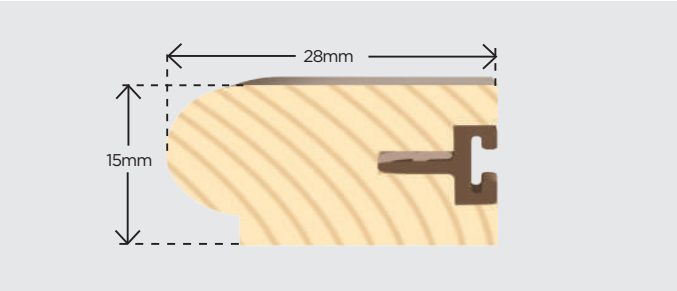

Timber Staff Bead 28mm x 15mm with Carrier & 6.5mm Pile & Fin

Length - 3m

Available in primed & unprimed

Ref: 1.40.0024

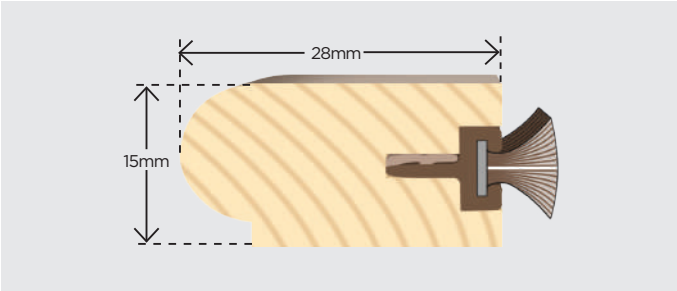

Timber Staff Bead 20mm x 20mm with Pile Carrier

Length - 3m Ref: 1.40.0015

Available in primed & unprimed

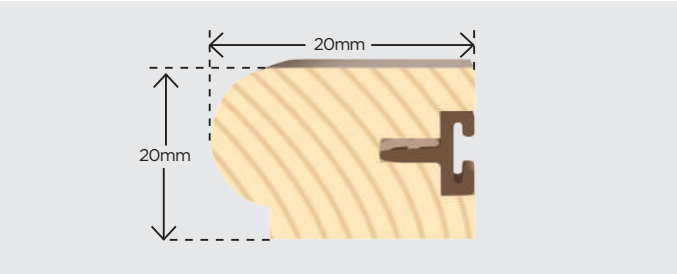

Timber Staff Bead 20mm x 20mm with Carrier & 6.5mm Pile & Fin

Length - 3m Ref: 1.40.0016

Available in primed & unprimed

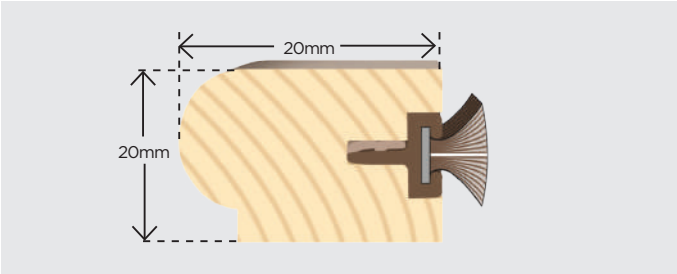

Timber Staff Bead 24mm x 20mm with Pile Carrier

Length - 3m Ref: 1.40.0017

Available in primed & unprimed

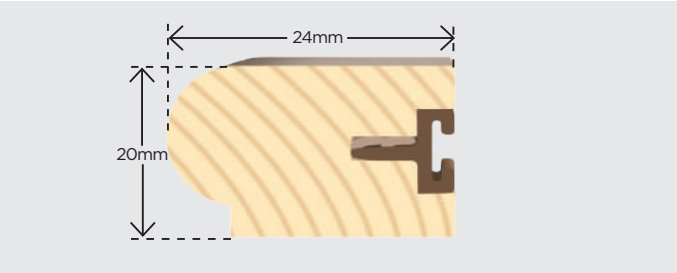

Timber Staff Bead 24mm x 20mm with Carrier & 6.5mm Pile & Fin

Length - 3m Ref: 1.40.0018

Available in primed & unprimed

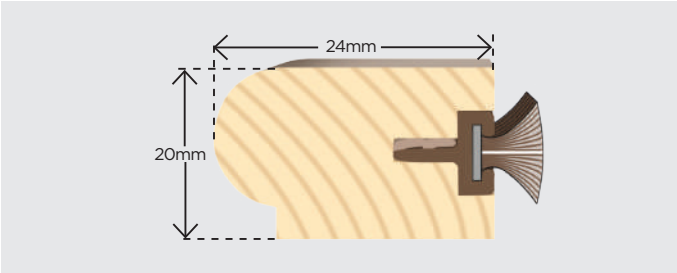

Timber Staff Bead 28mm x 20mm with Pile Carrier

Length - 3m Ref: 1.40.0019

Available in primed & unprimed

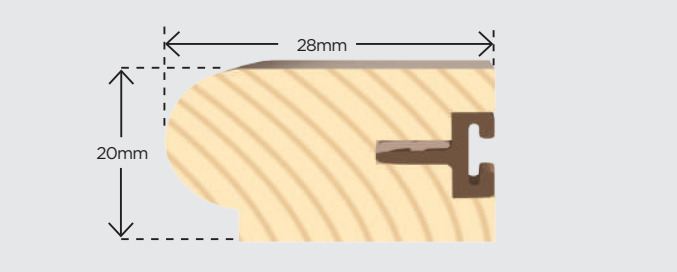

Timber Staff Bead 28mm x 20mm with Carrier & 6.5mm Pile & Fin

Length - 3m Ref: 1.40.0020

Available in primed & unprimed

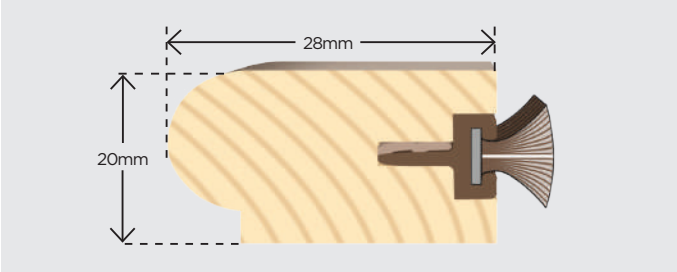

Timber Staff Bead 33mm x 16mm with Pile Carrier

Length - 3m Ref: 1.40.0021

Available in primed & unprimed

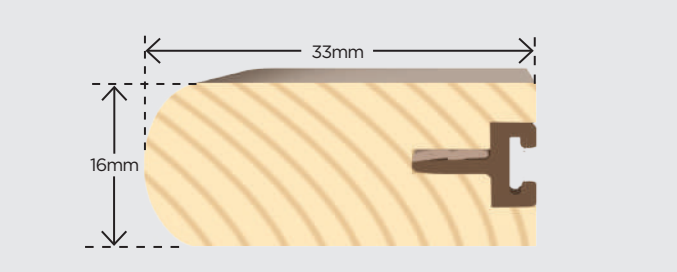

Timber Staff Bead 33mm x 16mm with Carrier & 6.5mm Pile & Fin

Length - 3m Ref: 1.40.0022

Available in primed & unprimed

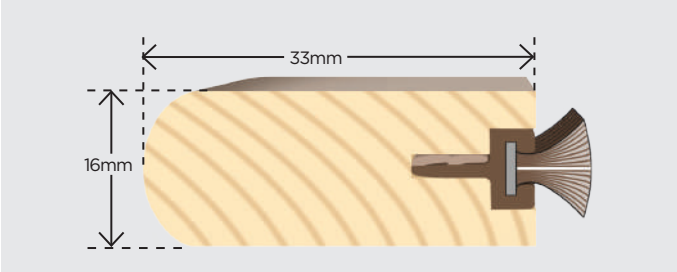

Offset Leg Carrier

Length – 2.2m

Available in brown & white

Ref: 1.10.0310

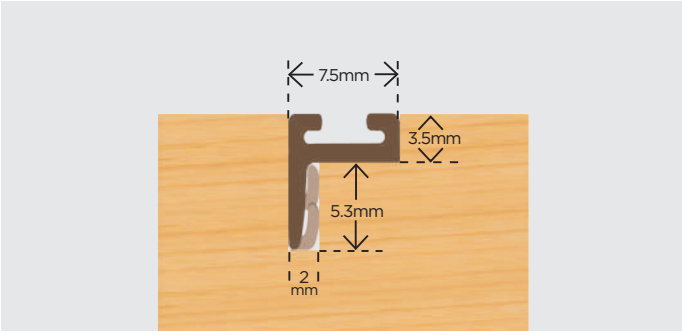

Centre Leg Carrier

Length – 2.2m

Available in brown & white

Ref: 1.10.0300

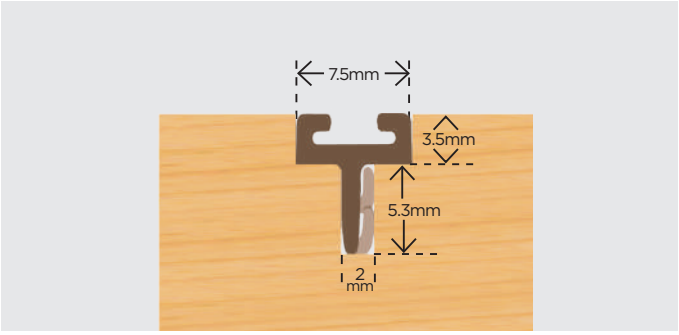

Self Adhesive Carrier

Length – 2.2m

Available in brown & white

Ref: 1.10.0320

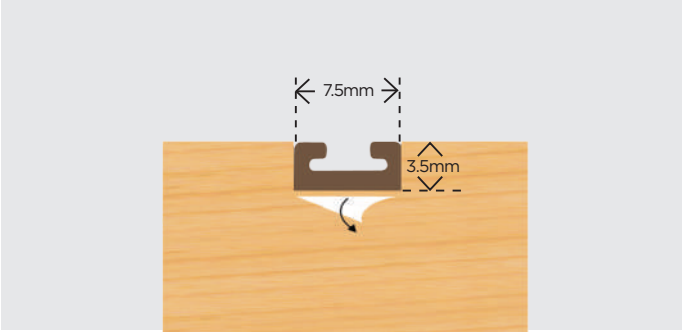

Non Adhesive Carrier

Length – 2.2m

Available in brown, white & black

Ref: 1.10.0340

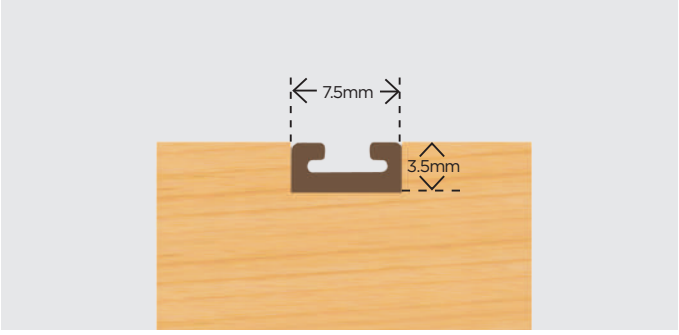

Offset Leg Pile Carrier with 6.5mm Pile & Fin

Length – 2.2m

Available in brown & white

Ref: 1.10.0311

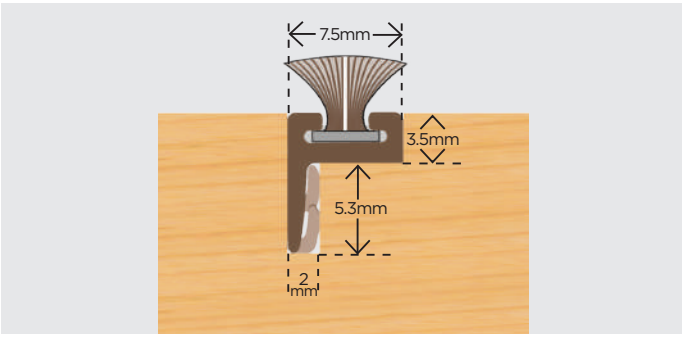

Centre Leg Pile Carrier with 6.5mm Pile & Fin

Length – 2.2m

Available in brown & white

Ref: 1.10.0301

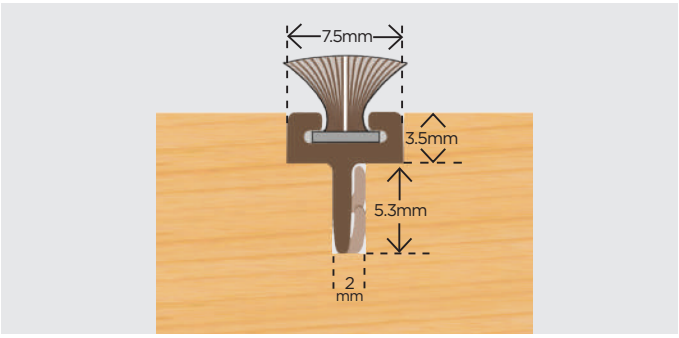

Self Adhesive Pile Carrier with 6.5mm Pile & Fin

Length – 2.2m

Available in brown & white

Ref: 1.10.0321

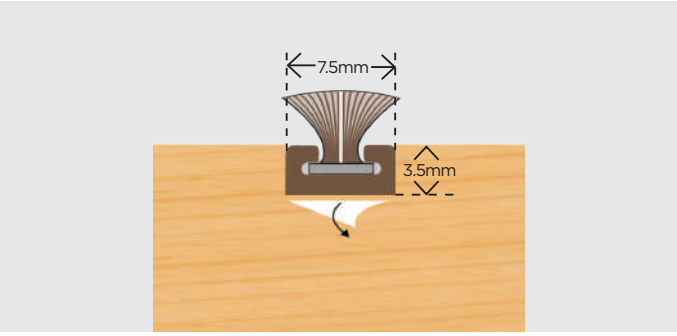

Non Adhesive Pile Carrier with 6.5mm Pile & Fin

Length – 2.2m

Available in brown & white

Ref: 1.10.0326

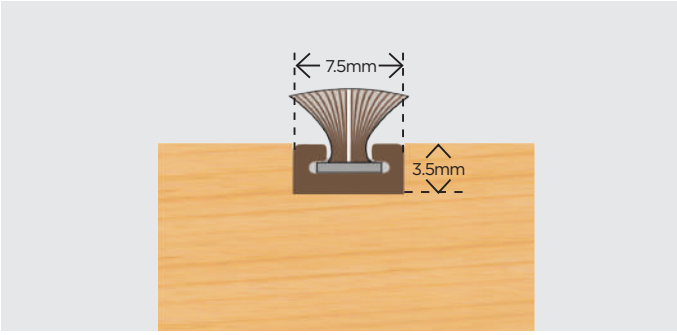

Offset Leg Carrier with D slot 6.5mm

Length – 2.2m

Available in brown & white

Ref: 1.10.0362

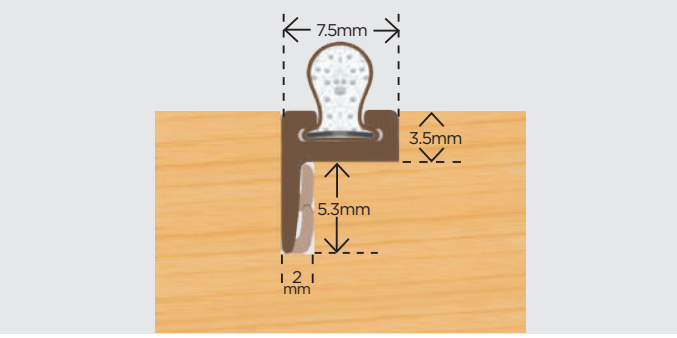

Centre Leg Carrier with D slot 6.5mm

Length – 2.2m

Available in brown & white

Ref: 1.10.0361

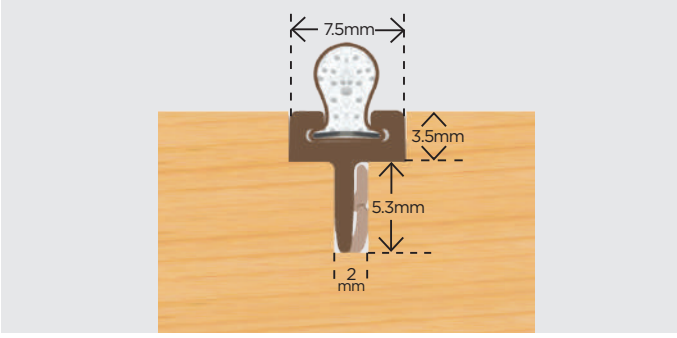

Self Adhesive Carrier with D slot 6.5mm

Length – 2.2m

Available in brown & white

Ref: 1.10.0360

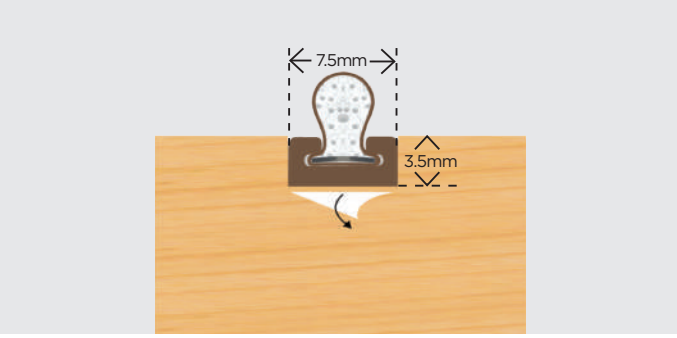

Non Adhesive Carrier with D slot 6.5mm

Length – 2.2m

Available in brown & white

Ref: 1.10.0363

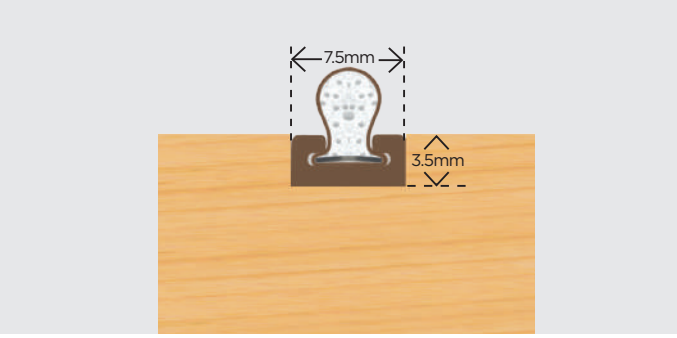

Slide Pile 4.8mm x 5mm with Fin

Roll Size: 100m

Available in white, grey & brown

Ref: 1.06.0351

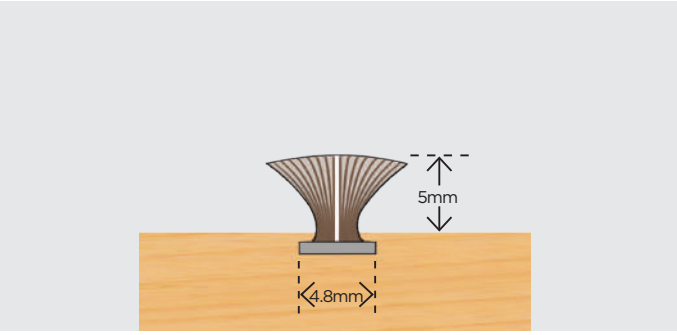

Slide Pile 4.8mm x 6.5mm with Fin

Roll Size: 100m

Available in white, grey & brown

Ref: 1.06.0354

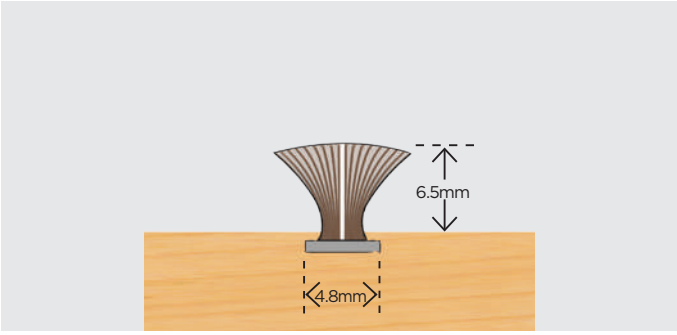

Slide Pile 4.8mm x 8.5mm with Fin

Roll Size: 100m

Available in white, grey & brown

Ref: 1.06.0357

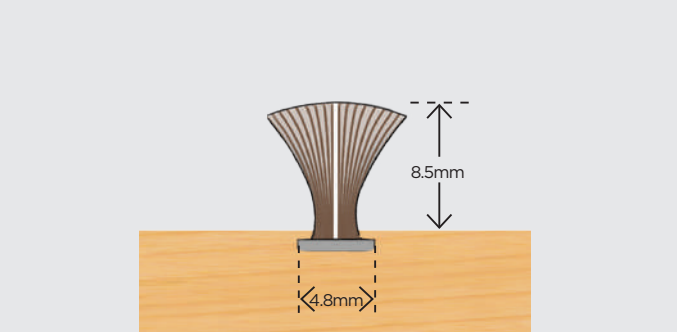

Slide Pile 4.8mm x 12mm with Fin

Roll Size: 100m

Available in grey

Ref: 1.06.0369

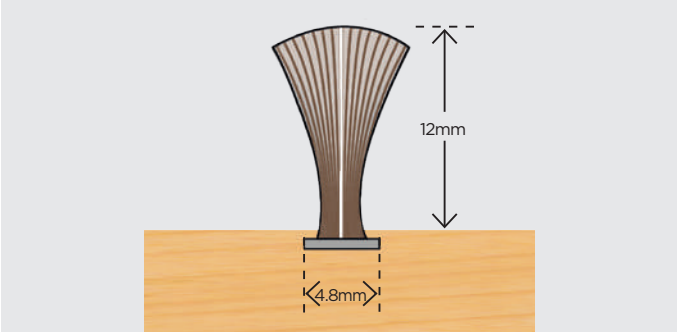

Slide Pile 6.7mm x 7mm

Roll Size: 250m

Available in grey

Ref: 1.06.0386

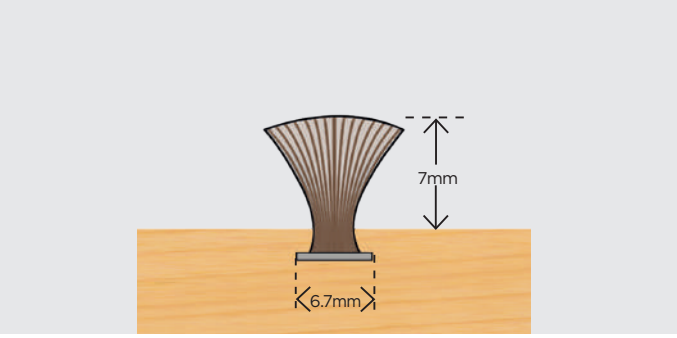

Slide Pile 6.7mm x 11mm

Roll Size: 200m

Available in grey

Ref: 1.06.0513

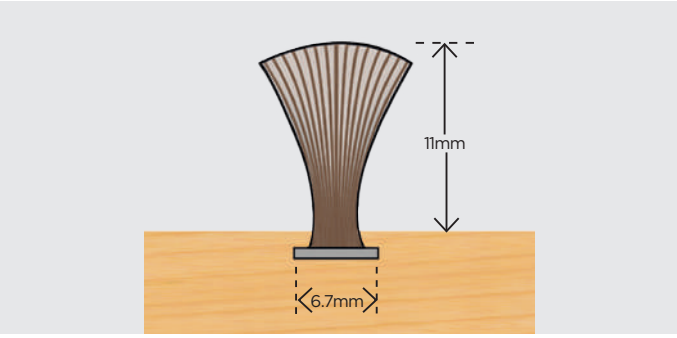

Slide Pile 6.7mm x 12mm with Fin

Roll Size: 200m

Available in grey

Ref: 1.06.0368

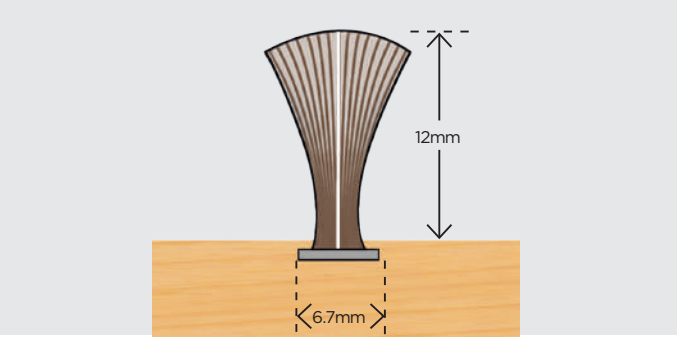

Slide Pile 6.9mm x 13mm (with & without fin)

Roll Size: 200m

Available in grey without fin	Available in black with fin
Ref: 1.06.0371	Ref: 1.06.0514

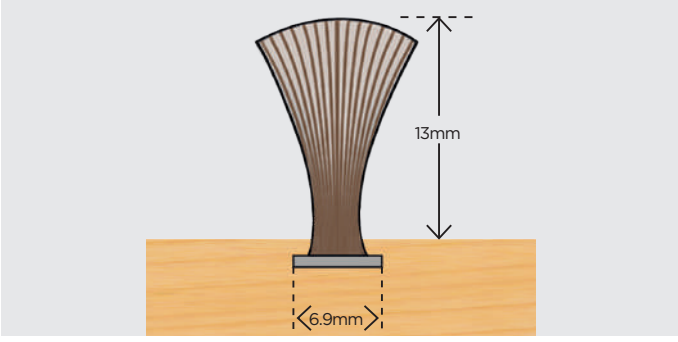

Slide Pile 6.9mm x 14mm

Roll Size: 150m

Available in grey

Ref: 1.06.0501

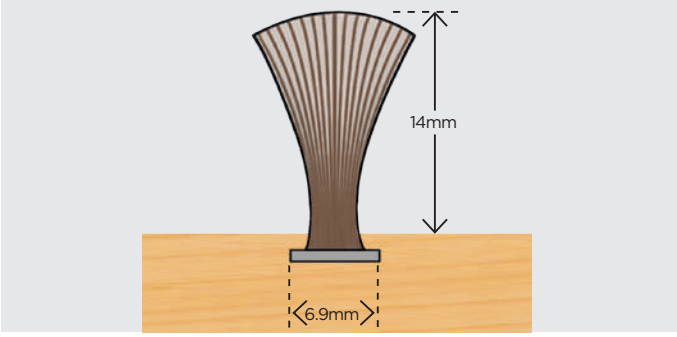

Self Adhesive Pile 6.7mm x 5mm

Roll Size: 100m

Available in white, grey & brown

Ref: 1.06.0348

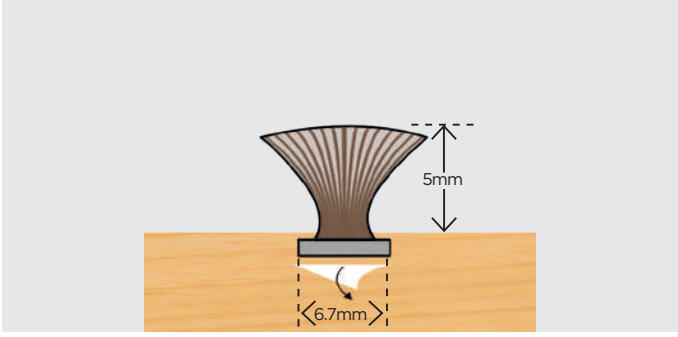

Self Adhesive Pile 6.7mm x 10mm

Roll Size: 200m

Available in grey

Ref: 1.06.0361

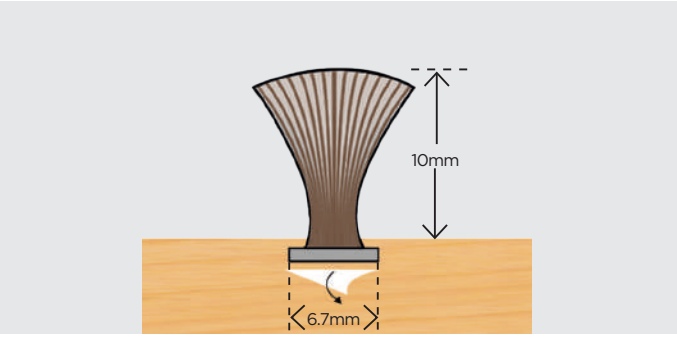

Self Adhesive Pile 5mm x 12mm

Roll Size: 150m

Available in grey

Ref: 1.06.0364

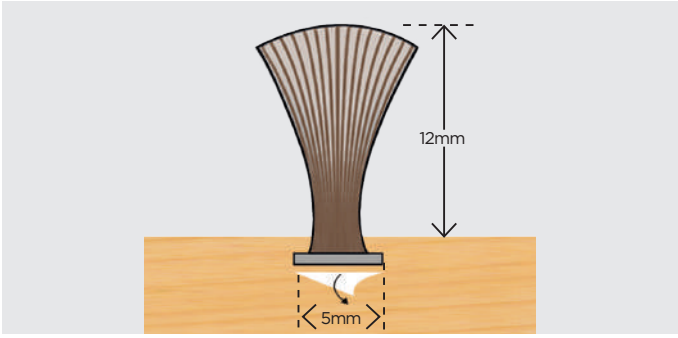

TCT Cutter 1/4" Shank for 4.8mm Base Pile

Ref: 1.25.0020

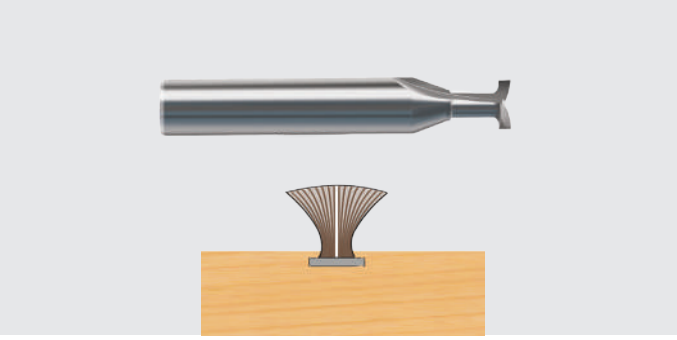

TCT Cutter 1/4" Shank for Self Adhesive Pile Carrier

Ref: 1.25.0035

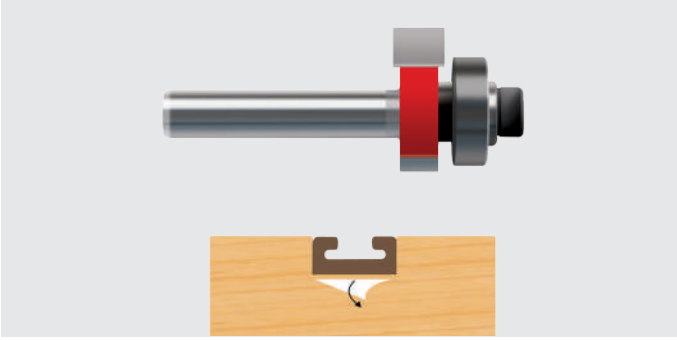

TCT Cutter 1/2" Shank for Centre Leg Pile Carrier

Ref: 1.25.0025

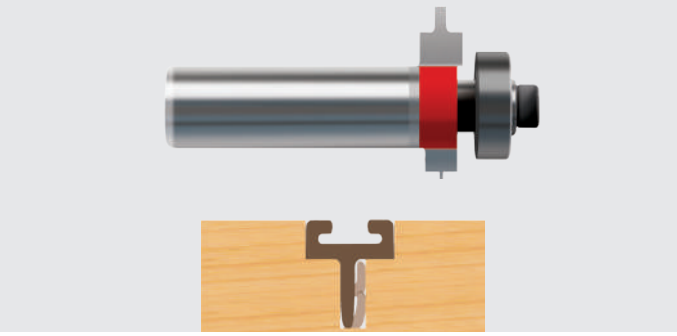

TCT Cutter 1/2" Shank for Offset Leg Pile Carrier

Ref: 1.25.0030

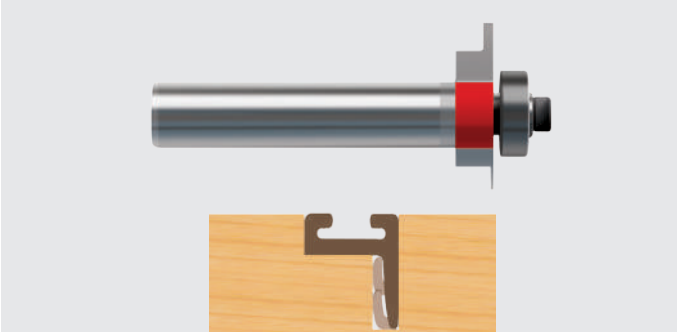

Staff Seal

Length – 2.4m

Available in brown & white

Ref: 1.10.0420

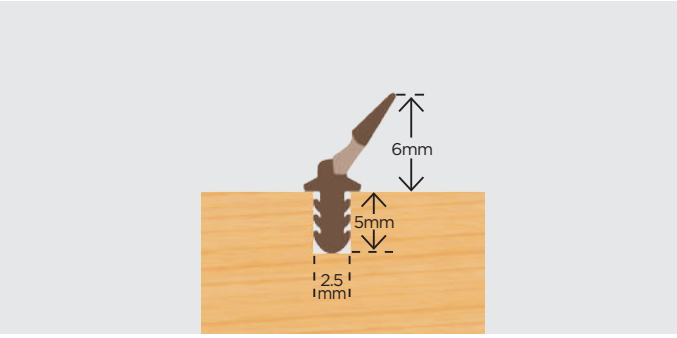

Slidex

Length – 3m

Available in brown & white

Ref: 1.10.0115

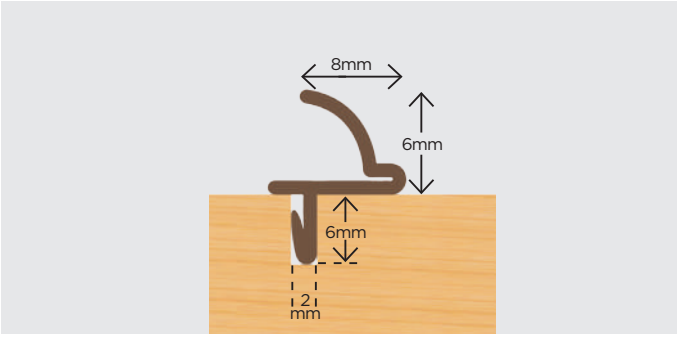

E Strip 4mm x 9mm

Roll – 100m, self adhesive

Available in brown & white

Ref: 1.03.0001

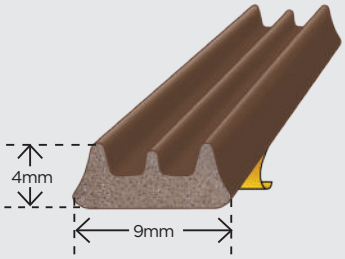

P Strip 9mm x 5.5mm

Roll – 100m, self adhesive

Available in black, brown & white

Ref: 1.03.0002

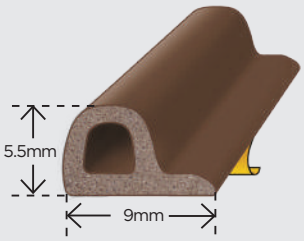

V Strip 9mm x 7mm

Roll – 100m, self adhesive

Available in brown & white

Ref: 1.03.0003

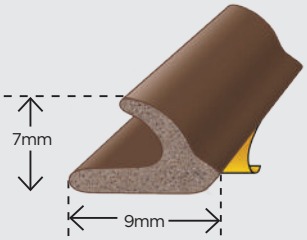

V Flap 12.5mm x 12.5mm

Length – 2.1m, self adhesive

Available in black, white & brown

Ref: 1.03.0008

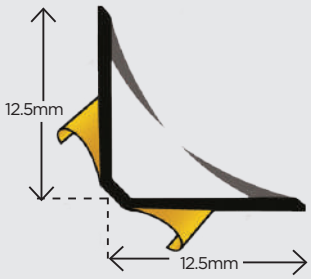

Constructor D 10mm x 12mm

Roll – 50m, self adhesive

Available in black

Ref:1.03.0065

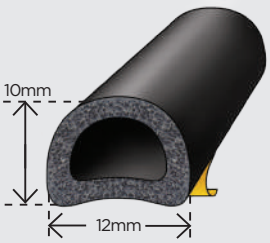

Constructor D 17mm x 21mm

Roll – 50m, self adhesive

Available in black

Ref: 1.03.0066

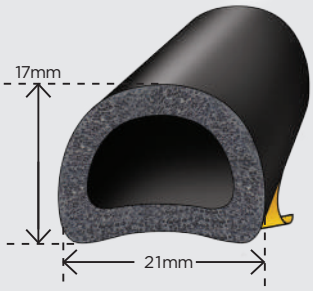

JSIF Wiper Seal

Seals gaps 4 - 7mm

Roll - 150m/Box

Material – TPE

Available in black, brown & white

Ref: 1.10.0170

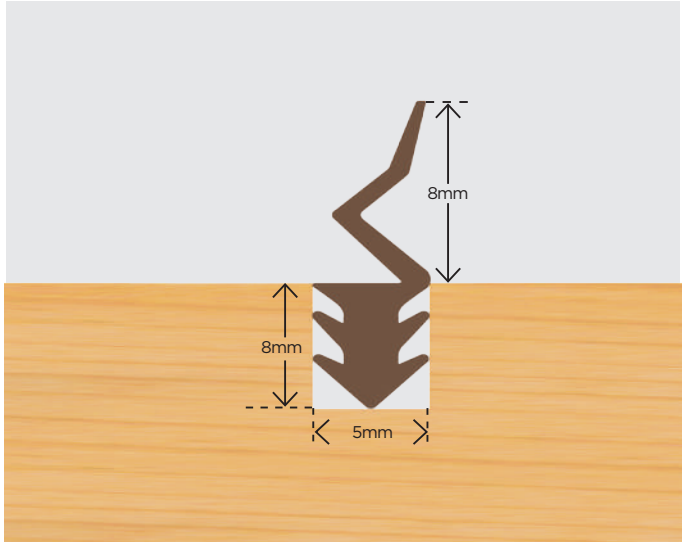

Flipex Wiper Seal

Seals gaps 4 - 7mm

Roll - 150m/Box

Material – TPE

Available in black

Ref: 1.10.0155

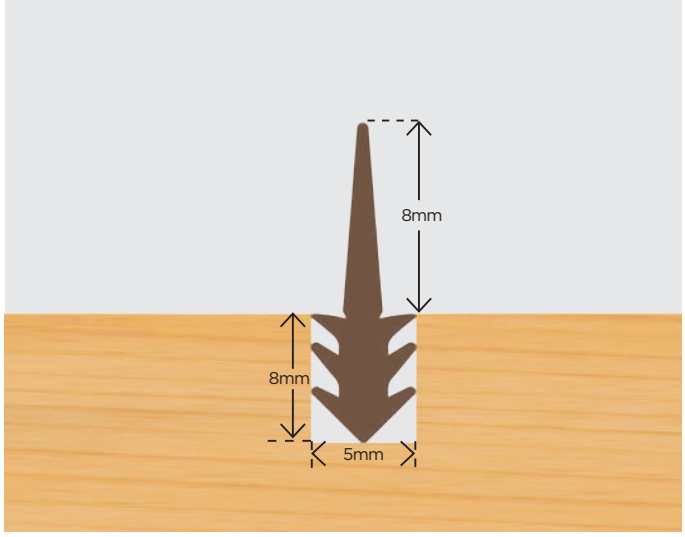

Cabitex Joinery Seal

Seals gaps 3 - 5mm

Roll - 100m/Box

Material – PVC Nitrile

Available in brown & white

Ref: 1.10.0150

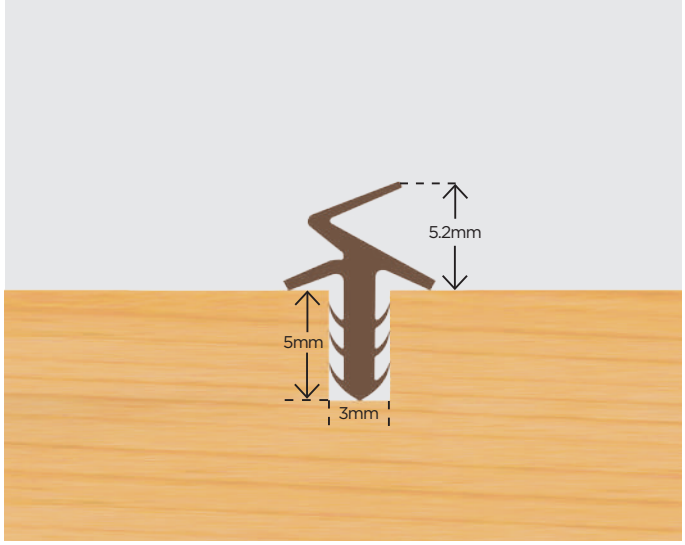

Tubex 6mm Joinery Seal

Seals gaps 3 - 5mm

Length - 100m/Box

Material – PVC Nitrile

Available in brown & white

Ref: 1.10.0470

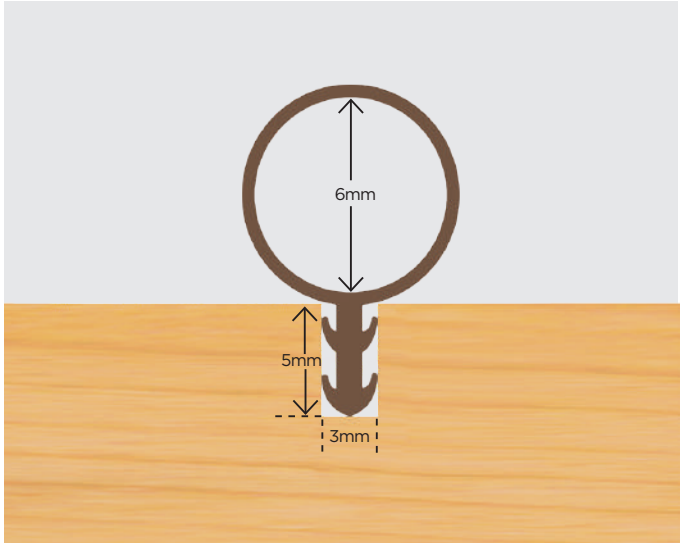

Tubex 7.5mm Joinery Seal

Seals gaps 3 - 6.5mm

Length - 100m/Box

Material – PVC Nitrile

Available in black, white & brown

Ref: 1.10.0471

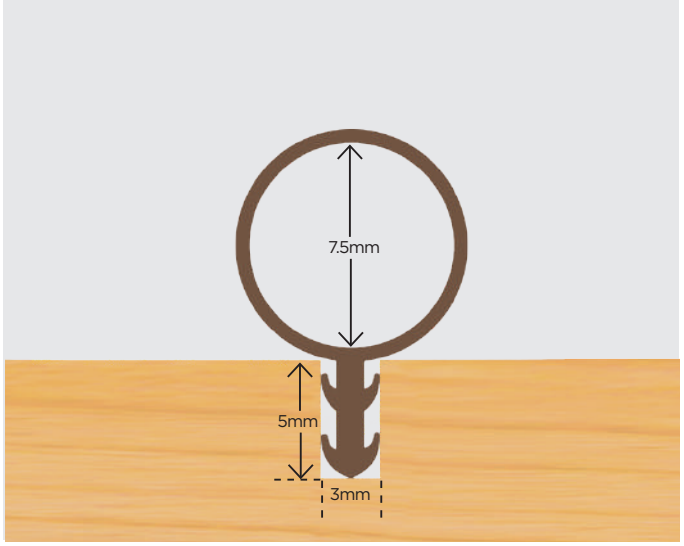

Tubex 8mm Joinery Seal

Seals gaps 3 - 7mm

Length - 100m/Box

Material – PVC Nitrile

Available in black

Ref: 1.10.0472

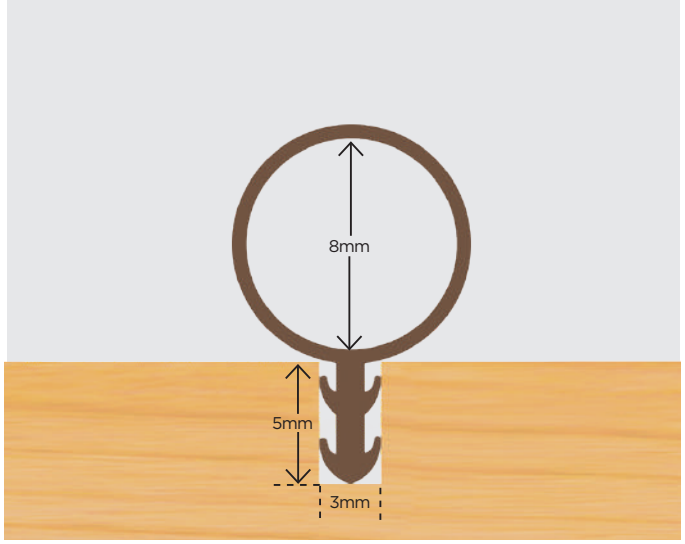

Tubex 8.5mm Joinery Seal

Seals gaps 3 – 7.5mm

Length - 100m/Box

Material – Silicone rubber

Available in black, brown & white

Ref: 1.19.0475

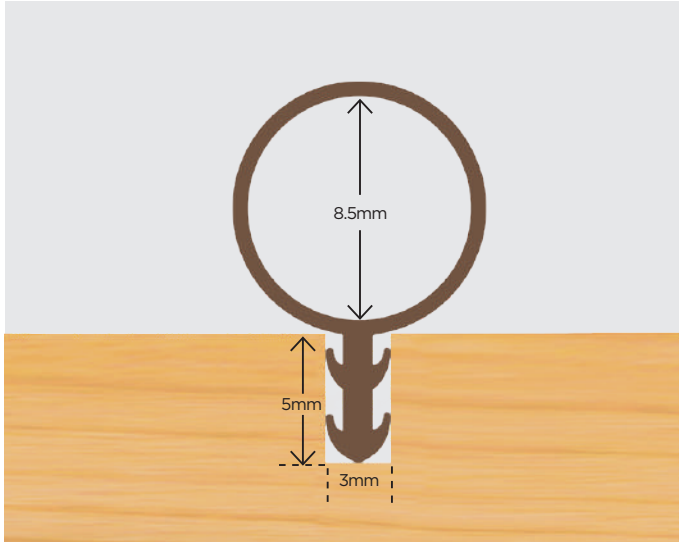

JOSC 7mm Joinery Seal

Seals gaps 3 – 6mm

Length - 150m/Box

Material – Dual Hard TPE

Available in black

Ref: 1.10.0161

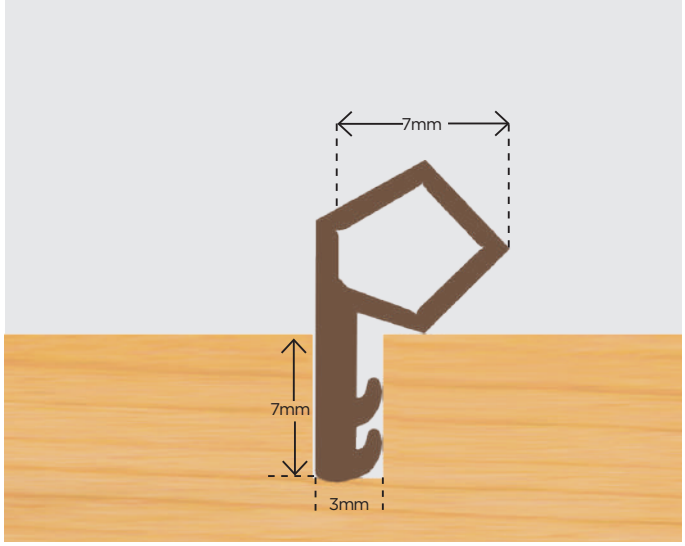

JOSC 9mm Joinery Seal

Seals gaps 3 – 8mm

Length - 100m/Box

Material – Dual Hard TPE

Available in black, white & brown

Ref: 1.10.0160

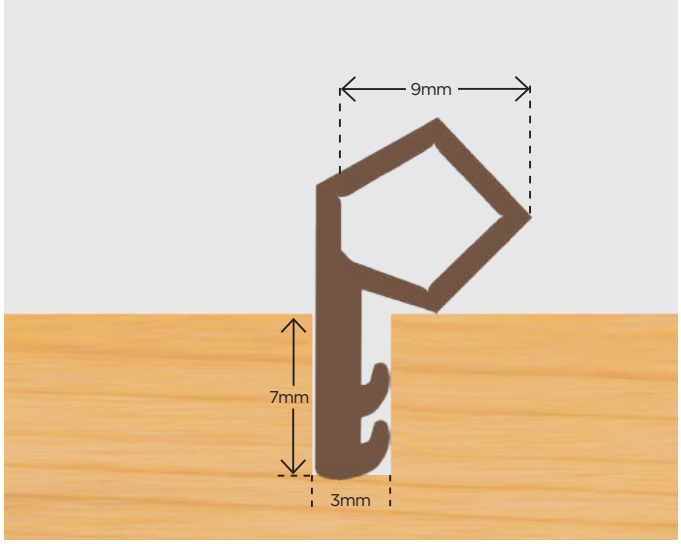

Weldex S20

Seals gaps 5 - 8mm
Length - 150m/Box
Material –TPE
Available in black & white
Ref: 1.10.0286

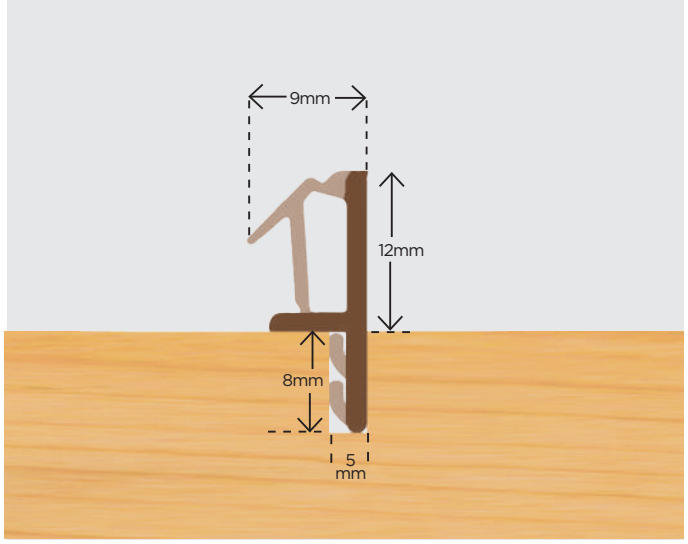

Weldex S23

Seals gaps 5 – 8mm
Length - 150m/Box
Material –TPE
Available in black & white
Ref: 1.10.0287

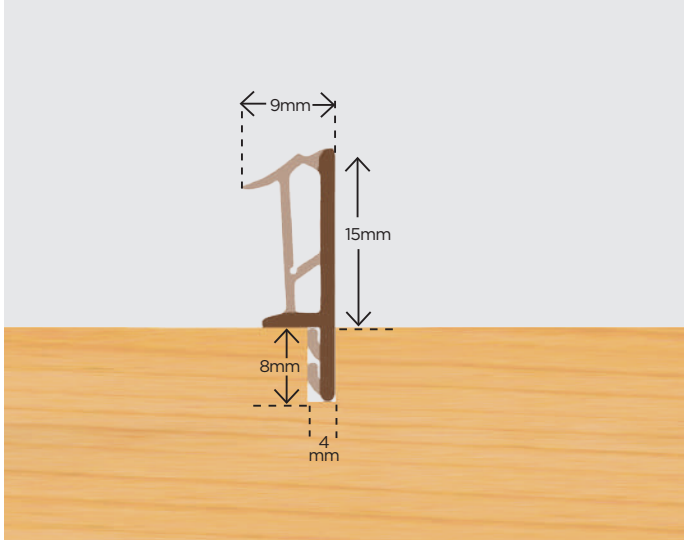

Weldex S26

Seals gaps 5 – 8mm
Length - 150m/Box
Material –TPE
Available in black & white
Ref: 1.10.0288

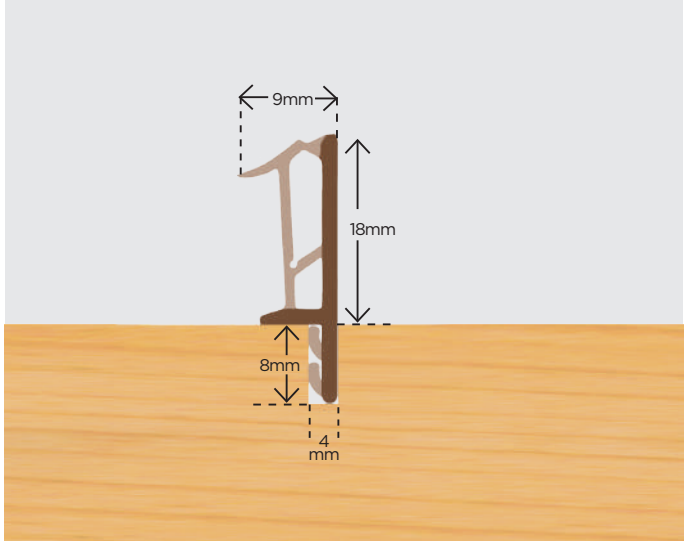

Compex A10

Seals Gaps - 4-6mm

Box - 495m (11 x 45m)

Material - Dual Hard PVC

Available in brown & white

Ref: 1.10.0007

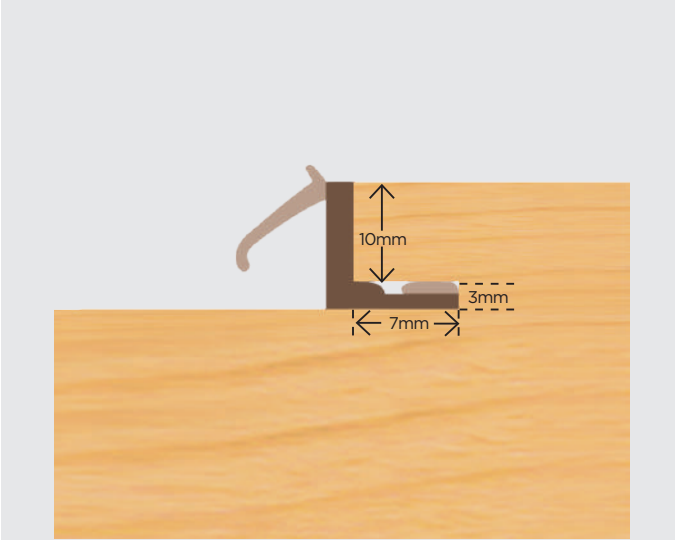

Compex A12

Seals Gaps - 4-6mm

Box - 495m (11 x 45m)

Material - Dual Hard PVC

Available in brown & white

Ref: 1.10.0057

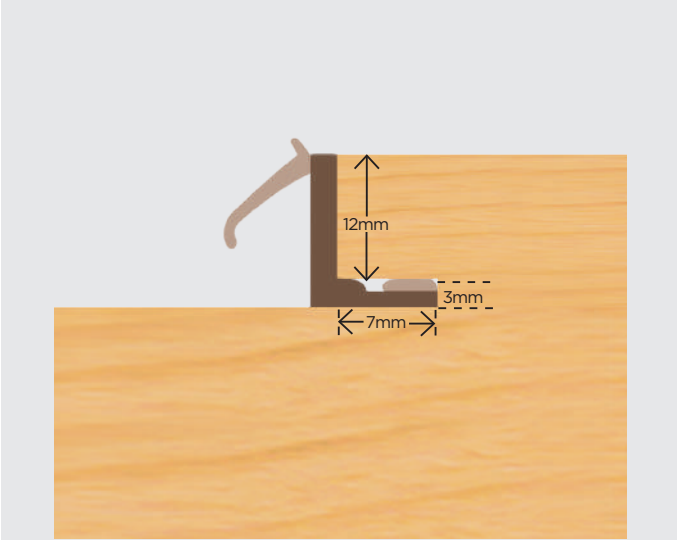

Compex S16.5

Seals Gaps - 4-6mm

Box - 400m (8 x 50m)

Material - Dual Hard PVC

Available in brown & white

Ref: 1.10.0010

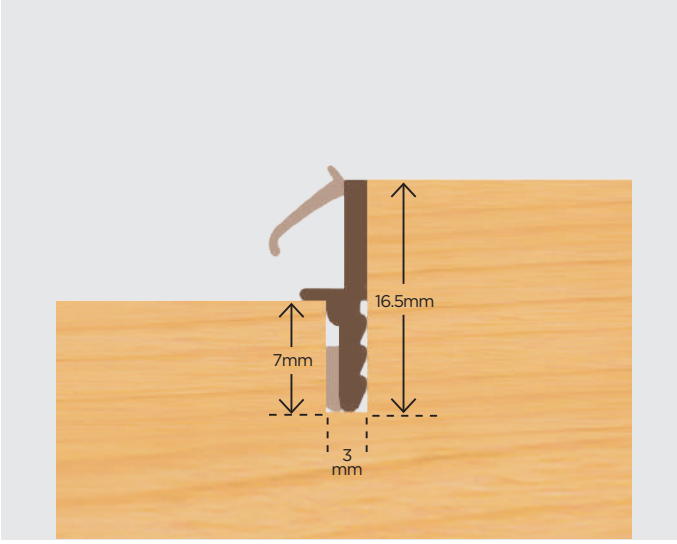

Compex S19

Seals Gaps - 4-6mm

Box - 350m (7 x 50m)

Material - Dual Hard PVC

Available in brown & white

Ref: 1.10.0015

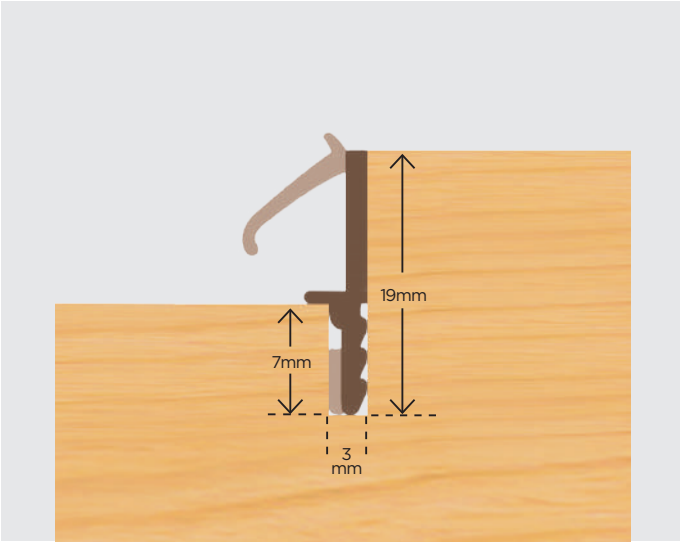

Compex S20

Seals gaps - 4-6mm

Box - 350m (7 x 50m)

Material - Dual Hard PVC

Available in brown & white

Ref: 1.10.0016

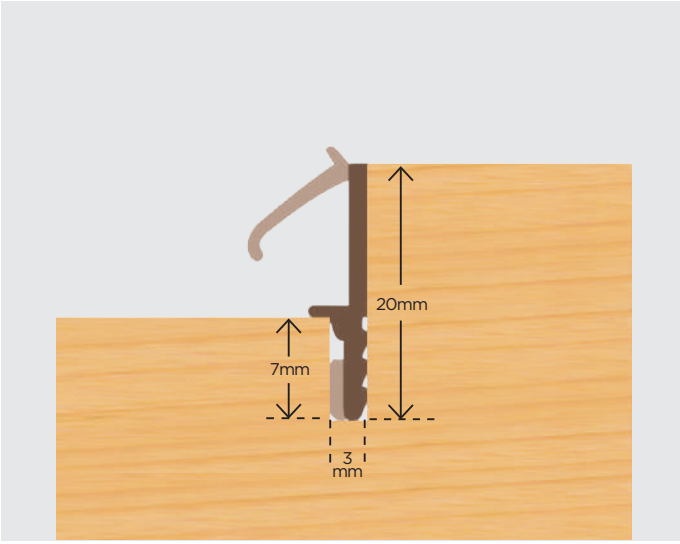

Compex S22

Seals Gaps - 4-6mm

Box - 300m (6 x 50m)

Material - Dual Hard PVC

Available in brown & white

Ref: 1.10.0018

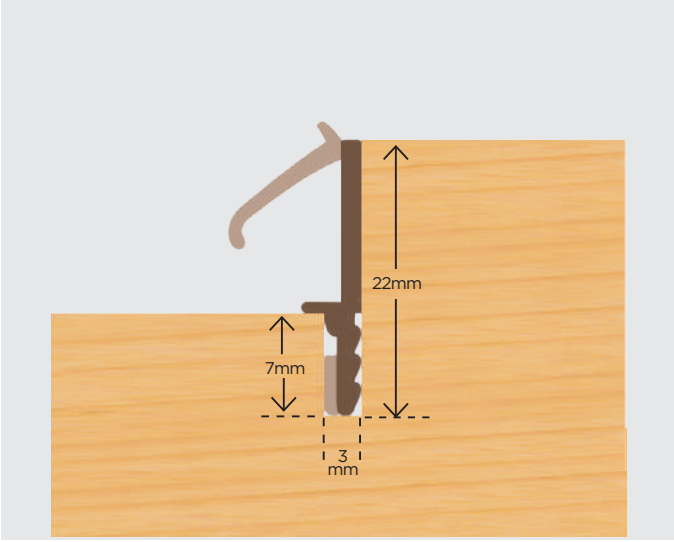

Compex S25

Seals Gaps - 4-6mm

Box - 270m (6 x 45m)

Material - Dual Hard PVC

Available in brown & white

Ref: 1.10.0021

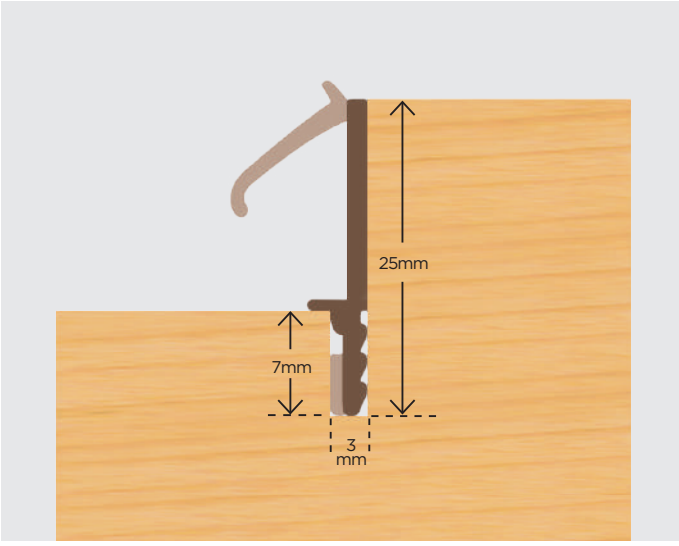

Threshold Sealing Bar

Lengths - 914mm, 2.4m & 3m

Rigid PVC body with flexible flipper

Available in brown

Ref: 1.10.0450

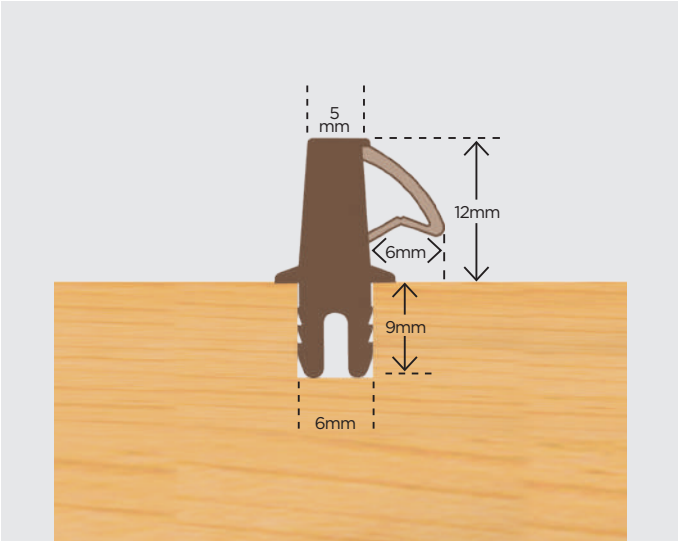

Threshold Sealing Bar 2

Lengths - 914mm, 2.4m & 3m

Rigid PVC body with flexible flipper

Available in brown

Ref: 1.10.0452

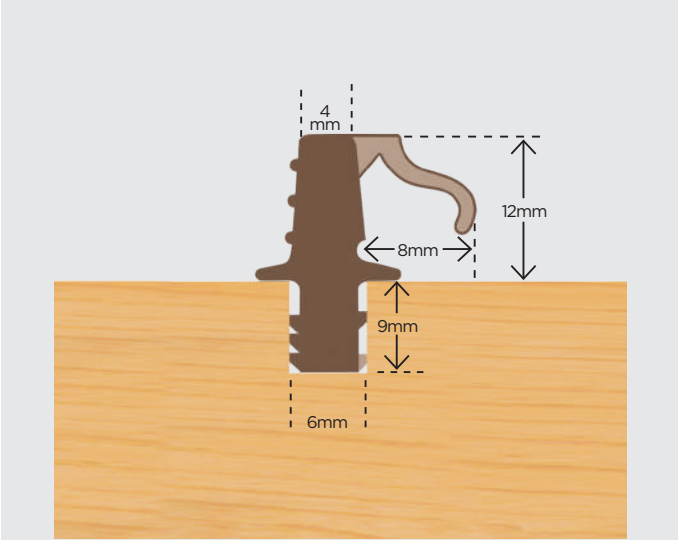

Aluminium Glazing Beads & Accessories

A Tapered Wedge Packers for 14mm, 20mm, 24mm & 28mm units	**E** Angled or Flat drained Setting Blocks for 14mm, 20mm & 28mm units
B Aluminium Window Trim ref: PWT/17	**F** Posilok patented Aluminium Ventilated Bottom Bead
C Corner Mouldings ref: PWT/17/CM	**G** Posilok combined Anchoring 'n' Setting Block
D Posilok patented End Cap ref: PSL/JPEC	**H** Double Sided Lipped Security Glazing Tape

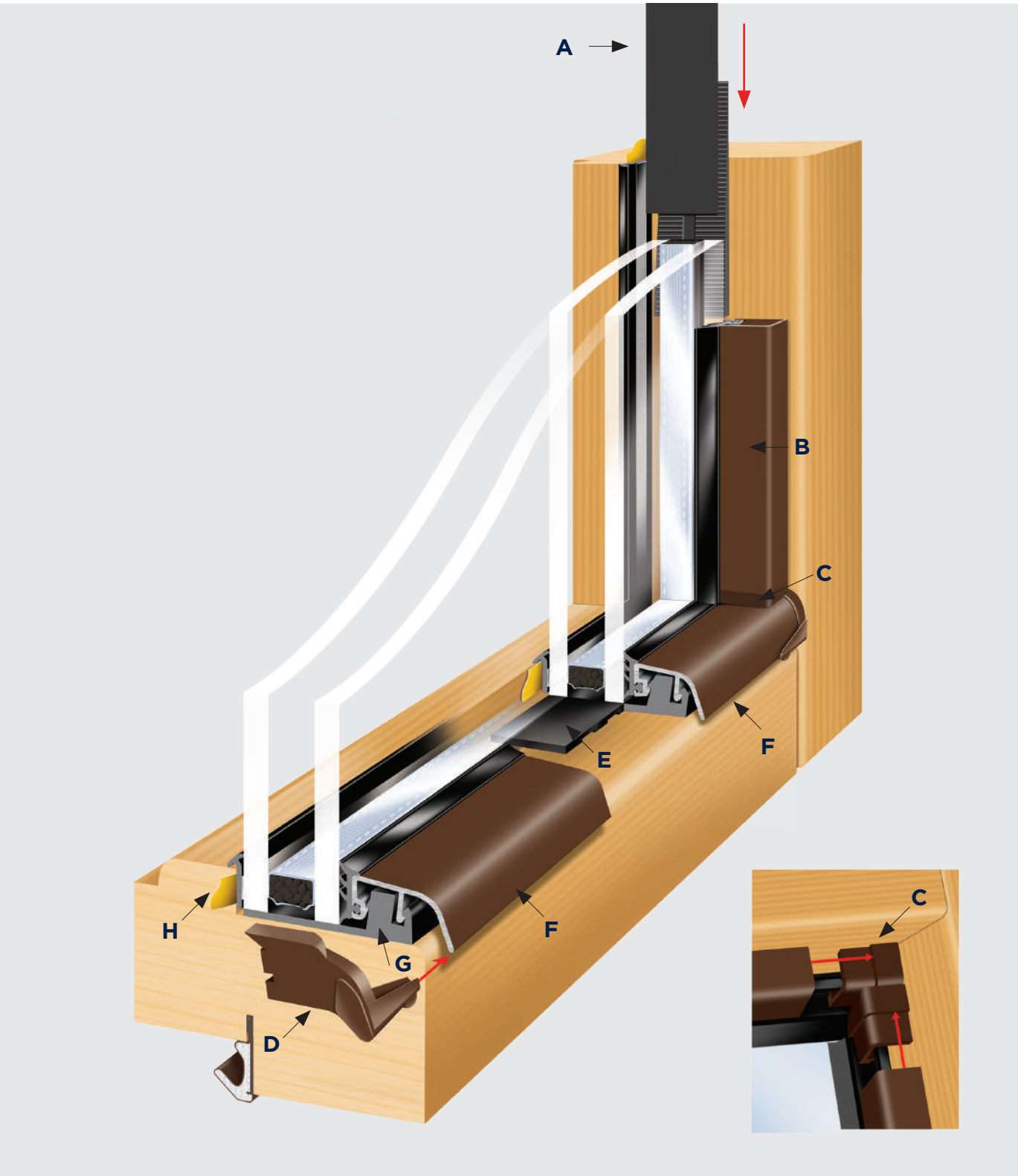

Ventilated Aluminium Glazing Beads

PWT 17mm Aluminium Bottom/Side Bead

Length - 3m

Available in mill, SAA, white, brown & black

Ref: 1.08.0200

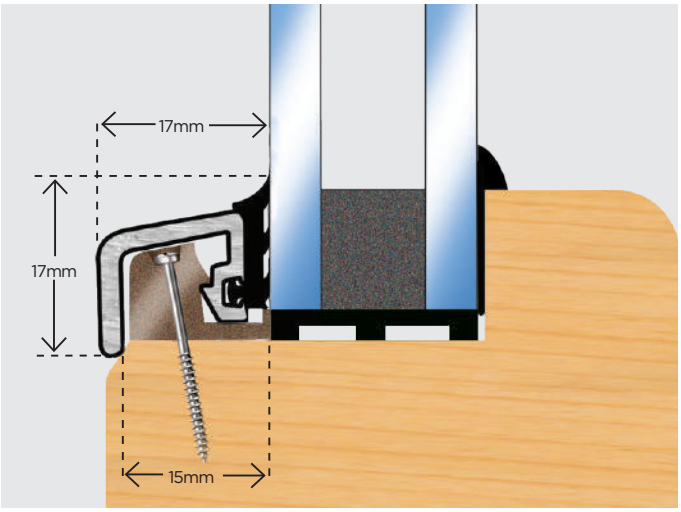

PWT High Security Window Trim

Length - 3m

Available in mill, SAA, white, brown & black

A Internal Wedge Gasket
B Aluminium Fixing Block

Ref: 1.08.0300

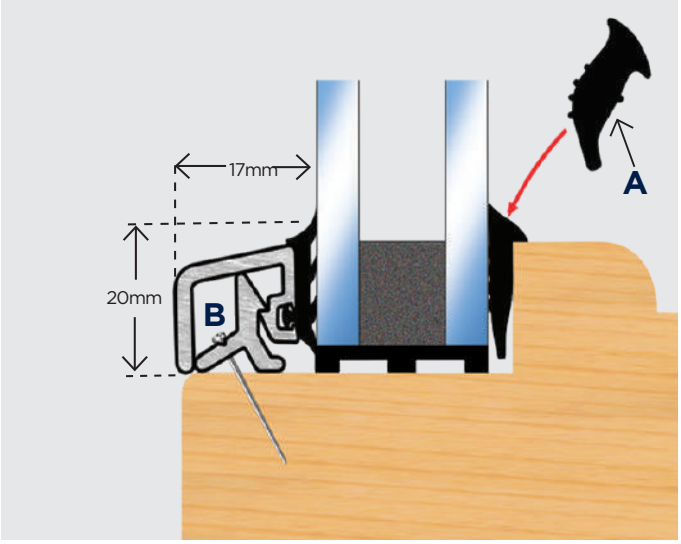

Posilok 24mm Ventilated Aluminium Bottom Bead

Length - 3m

Available in mill, SAA, white, brown, black & cream

Ref: 1.08.0024

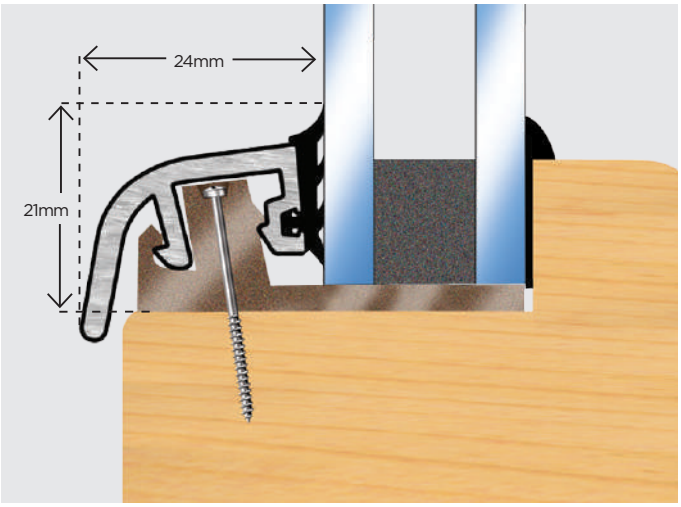

Ventilated Aluminium Glazing Beads

Posilok 32mm Ventilated Aluminium Bottom Bead

Length - 3m

Available in mill, SAA, white, brown, black & cream

Ref: 1.08.0032

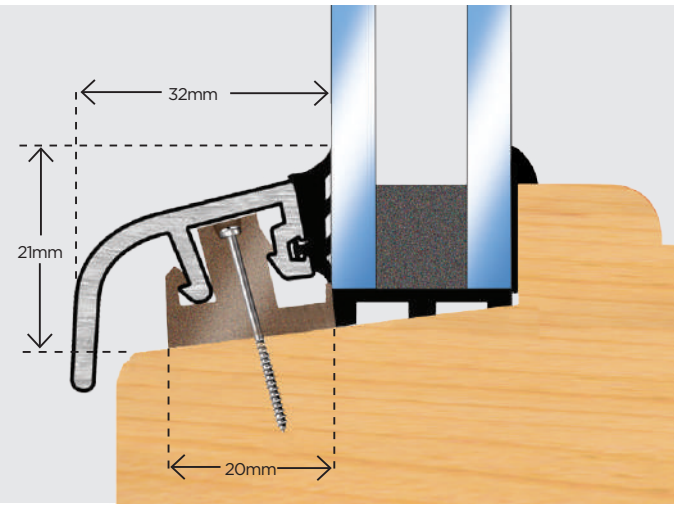

Posilok 40mm Ventilated Aluminium Bottom Bead

Length - 3m

Available in mill, SAA, white, brown & black

Ref: 1.08.0040

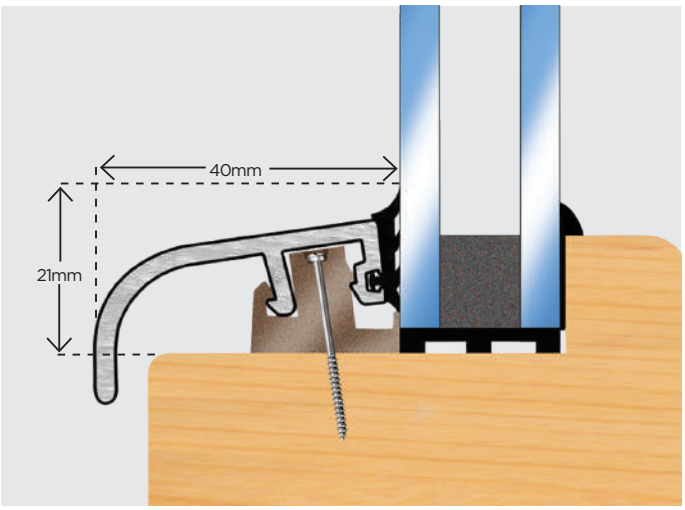

Posilok 53mm Ventilated Aluminium Bottom Bead

Length - 3m

Available in mill, SAA, white, brown & black

Ref: 1.08.0053

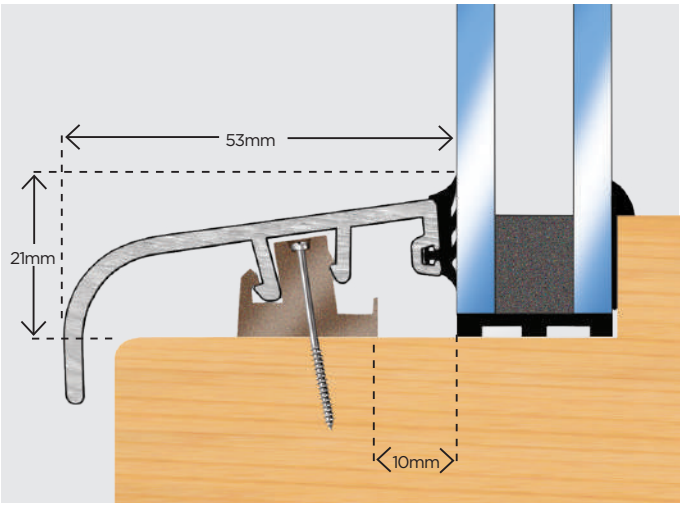

Self Adhesive EPDM Dry Glaze Profiles

Profile	Width x Height	Reel	Colours
M 2 x 8mm	2mm x 8mm	200m	black /white
M 3 x 8mm	3mm x 8mm	150m	black
M 3 x 9mm	3mm x 9mm	150m	black/brown/white
M 3 x 12mm	3mm x 12mm	100m	black
M 3 x 15mm	3mm x 15mm	50m	black
M 4 x 8mm	4mm x 8mm	125m	grey
M 4 x 9mm	4mm x 9mm	125m	black
M 4 x 15mm	4mm x 15mm	50m	black
M 4 x 20mm	4mm x 20mm	50m	black
M 5 x 10mm	5mm x 10mm	100m	black
M 8 x 15mm	8mm x 15mm	50m	black

Ref: 1.03

Profile	Width x Height	Reel	Colours
MH 6 x 10mm	6mm x 10mm	50m	black

Ref: 1.03.0060

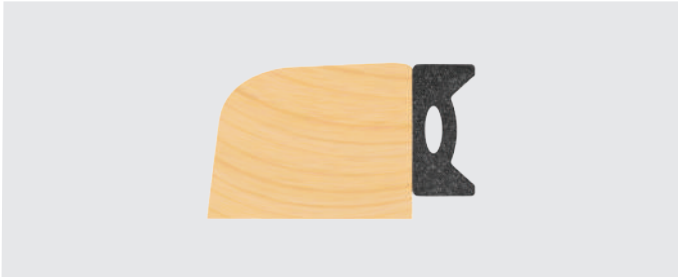

Profile	Width x Height	Reel	Colours
LS 3.4mm x 13.5mm	3.4mm x 13.5mm	100m	black

Ref: 1.03.0110

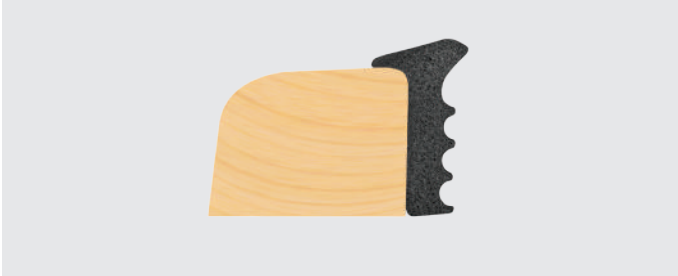

Secret Nailing, no damage to paint coating

A Glazing Wedge Gasket 8x9.5mm	**B** Secret Nailing

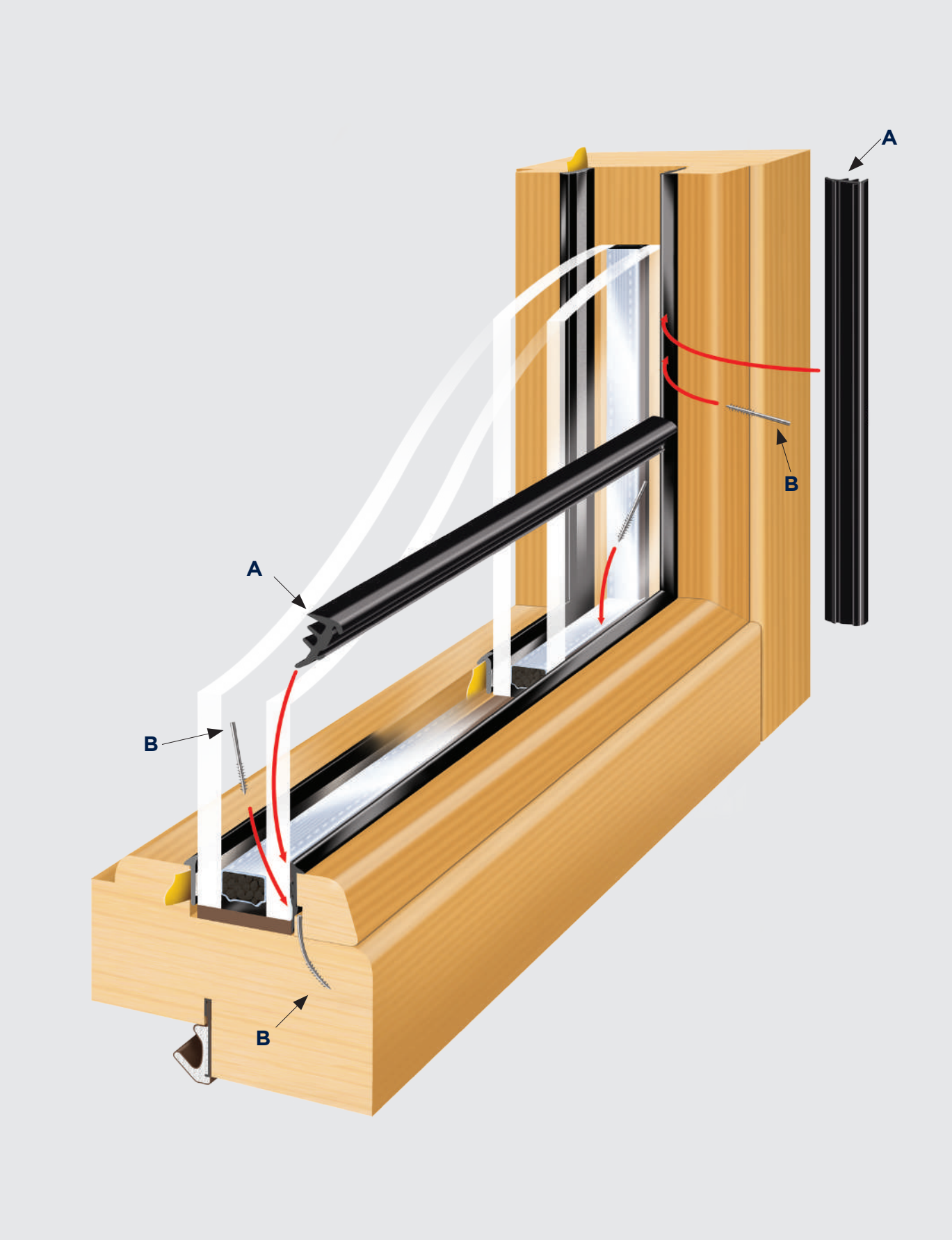

Glazing Wedge Gasket

A Glazing Wedge Gasket - Dual Hard TPE

B Secret Nail

C Machined Timber Bead

Roll Size - 100m

Available in black & white

Ref: 1.10.0283

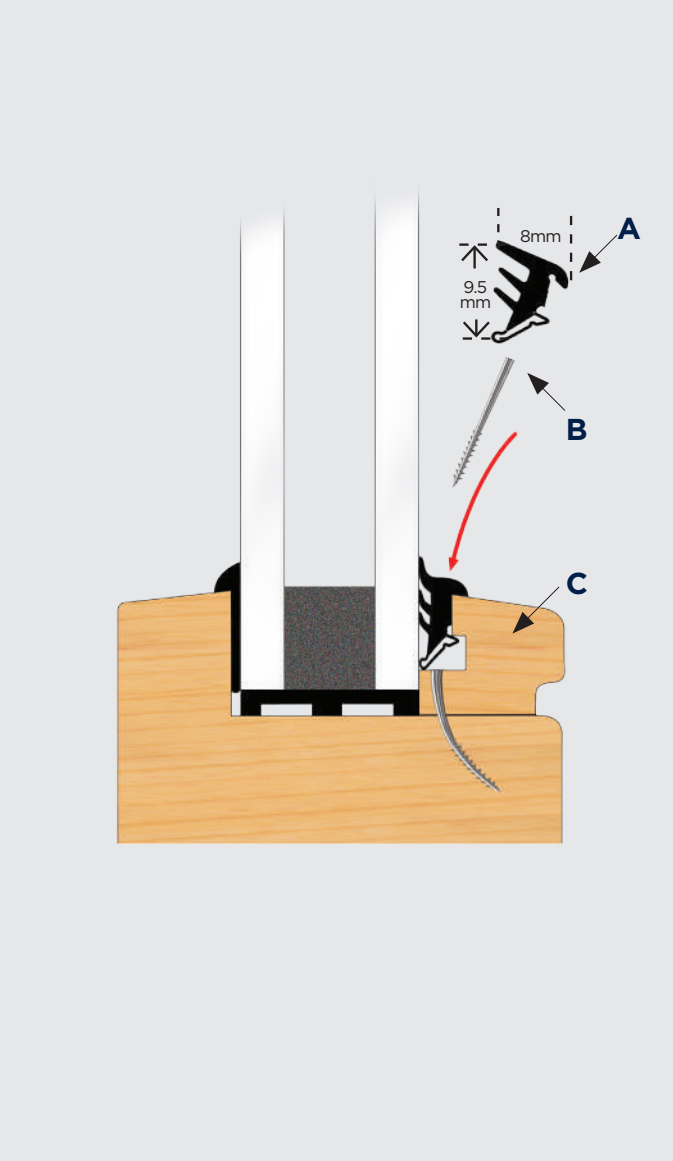

Machining Detail

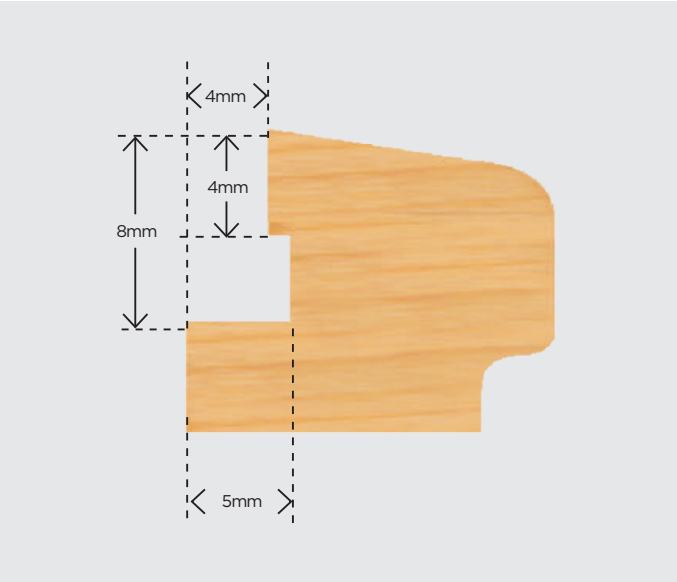

Aluminium Sill Extension For Timber Windows

Length - 3m

Available in mill, SAA, white & brown

Ref: 1.08.0260

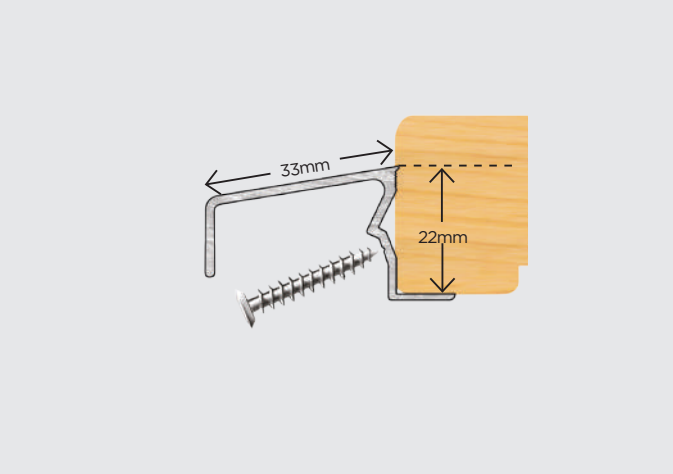

Push Fit & Single Sided Glazing Gaskets

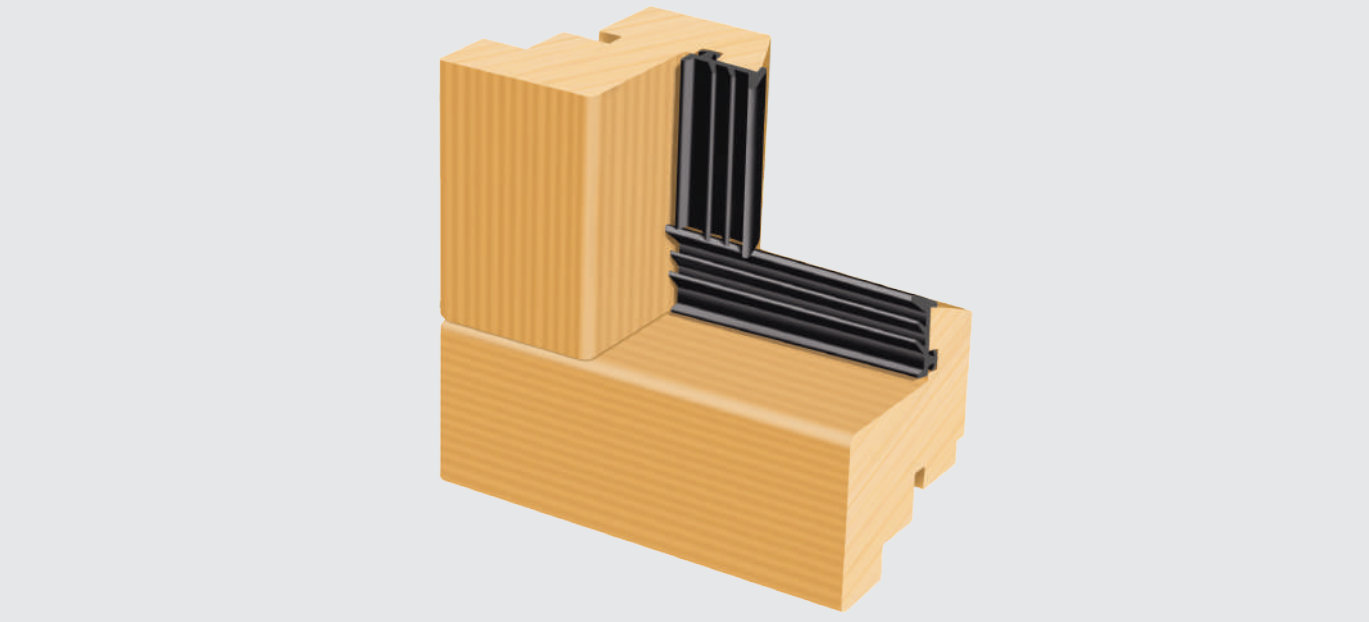

DGBS/AS 3 x 15mm

Roll 300m

Available in black & white (lubricated)

Black Ref: 1.09.0020

White Ref: 1.10.0121

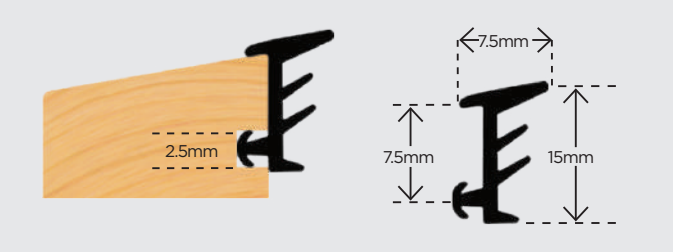

DGBS/RT 2 x 12mm

Roll 400m

Available in black (talc / lubricated)

Ref: 1.09.0022

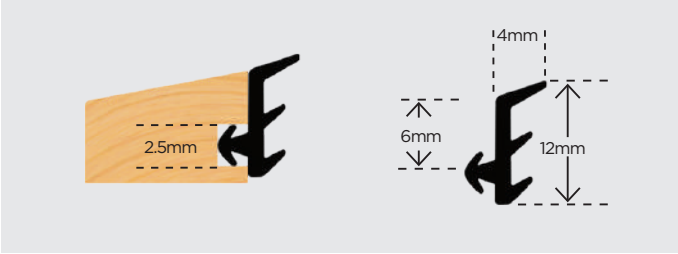

Single Sided Lipped Glazing Tape

Rigid spine for ease of application

Available in black & white

Ref: 1.10.0171 **SLGT 0.8 x 7.5mm x 33m**

Ref: 1.10.0172 **SLGT 0.8 x 12.8mm x 100m**

Double Sided PVC Security Glazing Tape

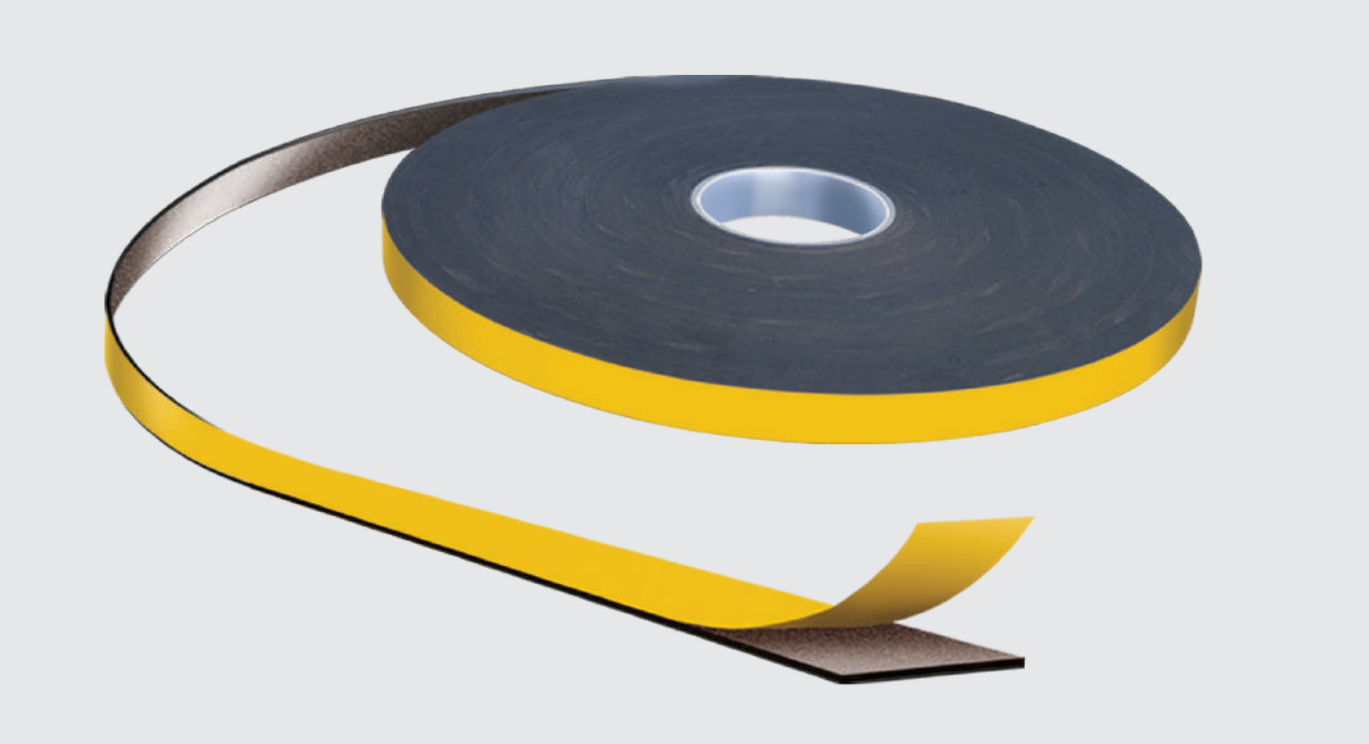

Specification

Our high security PVC glazing tape is closed cell, compressible, high density PVC coated with pressure sensitive moisture resistant solvent acrylic adhesive protected by a siliconised paper liner approved to BS 7950 (1997).

We offer a range of thicknesses & widths. The width should match the rebate/upstand height. We recommend a minimum of 10mm contact width to the frame but the greater the width the better the performance. Always ensure a clean & dry surface with the tape aligned to the top of the rebate without being stretched. Butt, or mitre corners & immediately prior to glazing remove the protective siliconised release paper. Our security PVC glazing tape is recommended to be used under 20% compression in order to maintain a water tight seal.

Thickness (mm)	1	1.5	2	3	4	5	6
Roll Length (m)	50	40	33	25	20	15	15

Storage

- Store in dry conditions & apply between +10˚C & +35˚C
- Shelf life 1 year

Double Sided Lipped Glazing Tape

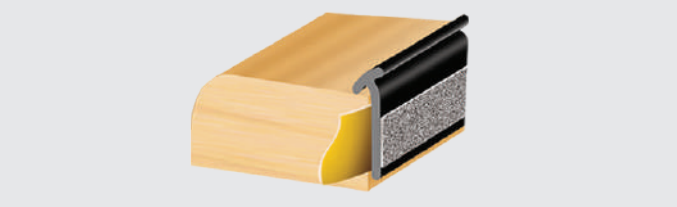

Rigid spine for ease of application

Roll: 100m

Available in black & white

DLGT 1.8 x 12.8mm x 100m

Ref: 1.10.0173

Georgian Bar Tape

A Siliconised paper or filmic liner

B Crosslinked PE foam

C Pressure sensitive acrylic adhesive

Thickness (mm)	1	1.6	2
Roll Length (m)	50	46	46

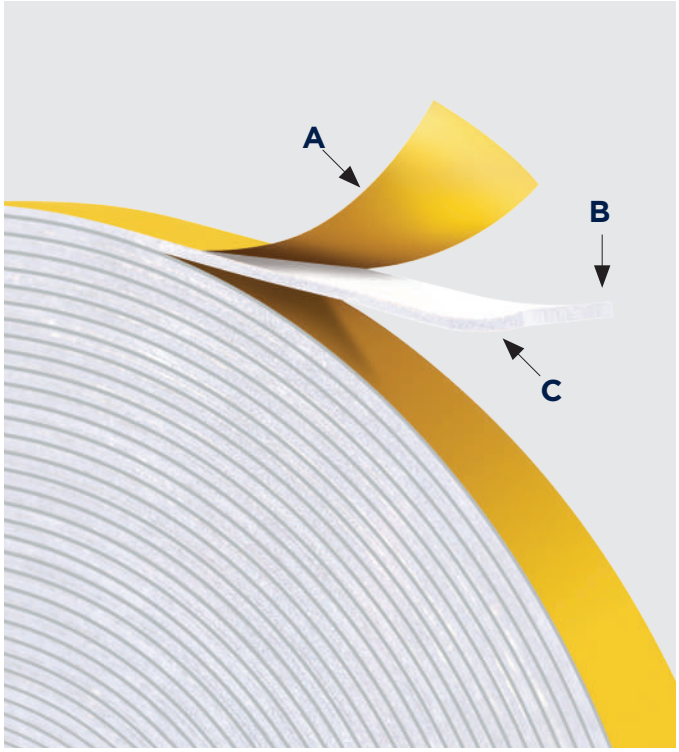

Specification

A high tack acrylic adhesive tape offering a good balance of peel & shear performance with excellent environmental resistance. The product has been designed for both internal & external applications.

The foam is a high quality Polyolefin with a high degree of colour stability & excellent key to the adhesive surface. The thickness & density range has been chosen to offer a conformable product for uneven, irregular or contoured materials.

The acrylic adhesive has good weathering & chemical resistance properties.

Available in black & white as a double sided tape in thicknesses 1mm, 1.6mm & 2mm protected by a siliconised paper liner in a range of widths.

Storage

- Store in dry conditions & apply between +10˚C and +35˚C
- Shelf life 1 year

.

Clear Acrylic Bonding Tape

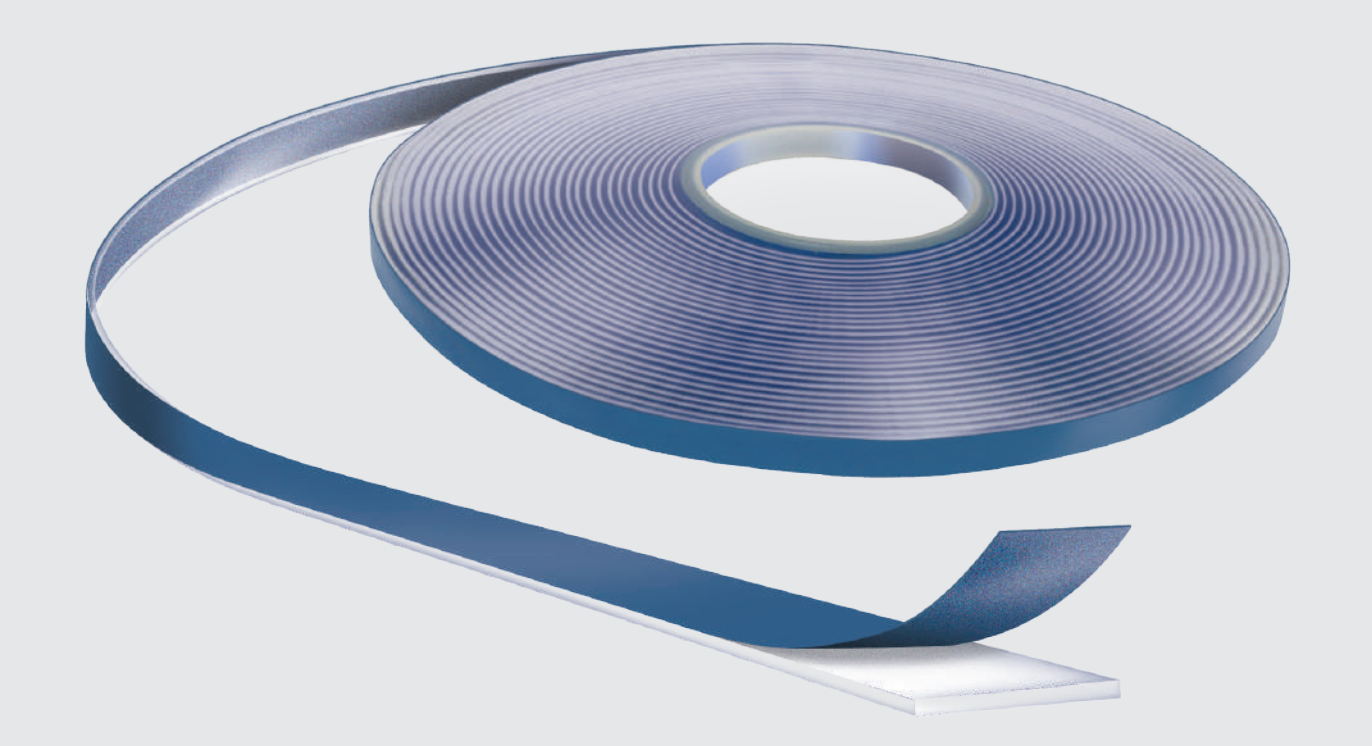

Unique Attributes
● Easy release liner
● Clear Tape
● Very high bond strength
● Solid acrylic core
● Good quick stick
● Distributes shock

Thickness (mm)	1	1.5	2	3
Roll length (m)	33	33	25	12

Typical Applications
● Security Glass Lamination
● Window and door decoration bars

Specification

Exitex acrylic bonding tape is a clear solid acrylic tape that is virtually invisible after application. Available in 1mm, 1.5mm, 2mm & 3mm thicknesses in a range of widths.

Designed with a solid acrylic core once adhered it will increase in bond strength over time & its performance will enhance with elevated temperature. Exitex acrylic tape has excellent weathering properties.

Instructions

For maximum adhesive performance, prepare the contact surface by removing dirt, wax, soap and oily films with a cleaning solvent. A typical cleaning solvent is a 50 / 50 isopropyl alcohol / water mixture. It may be necessary to seal and/or prime the contact surface.

The greater the adhesive-to-surface contact (known as wet-out), the better the adhesive bond strength. Apply the tape to the first surface with the liner on, & firmly rub down. Remove the liner just prior to bonding surfaces together and apply firm pressure to ensure full contact. Bond strength is dependent on the substrate surface, application temperature & dwell time. When possible, allow 24 hours dwell time at room temperature before loading.

Tilt & Turn Weatherbar

A	Tilt & Turn Weatherbar
B	End Cap
C	Aquatex Joinery Seal

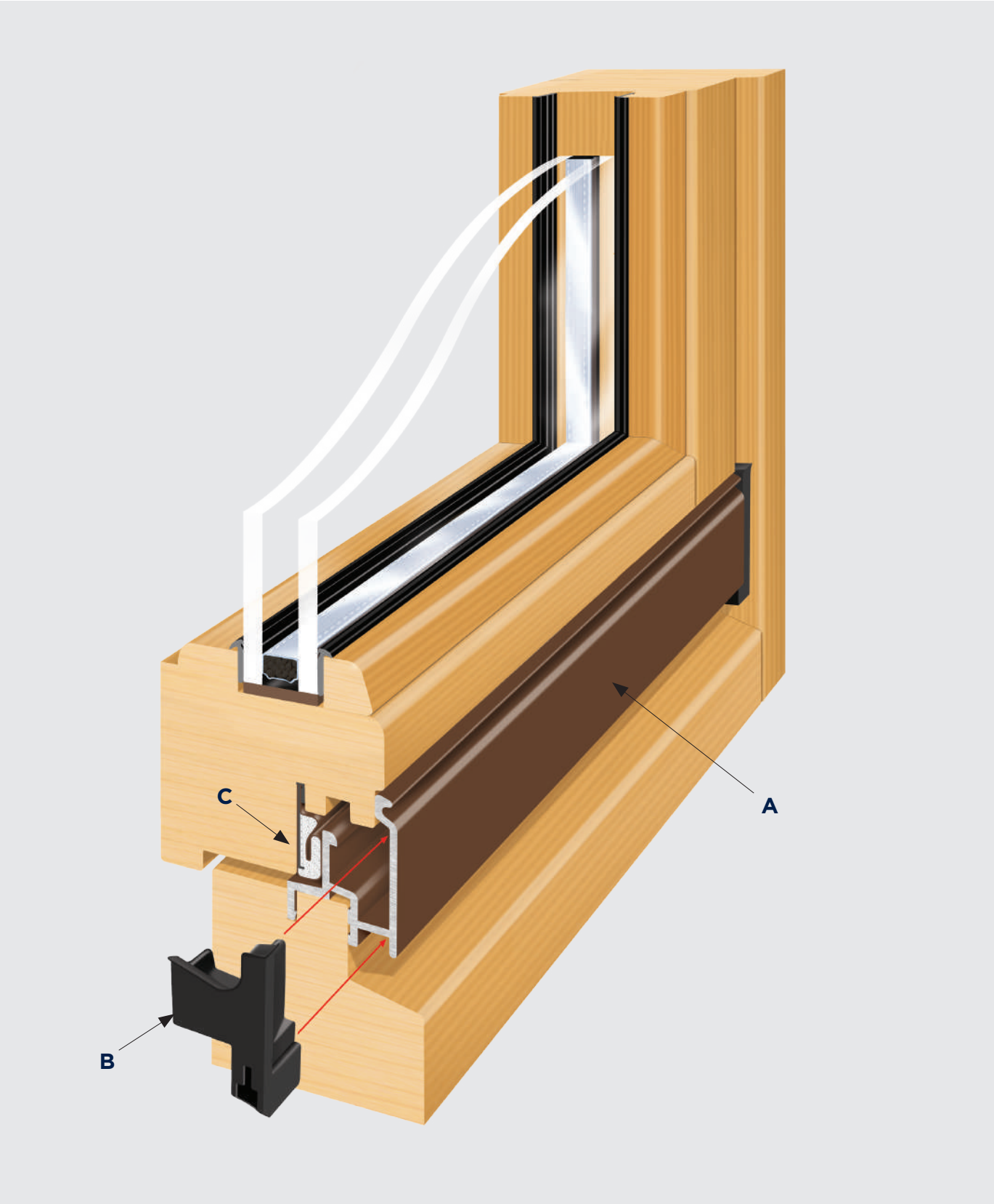

Tilt & Turn Weatherbar - Detail 1

Length – 2m

Available in brown, white & SAA

Ref: 2.23.0792

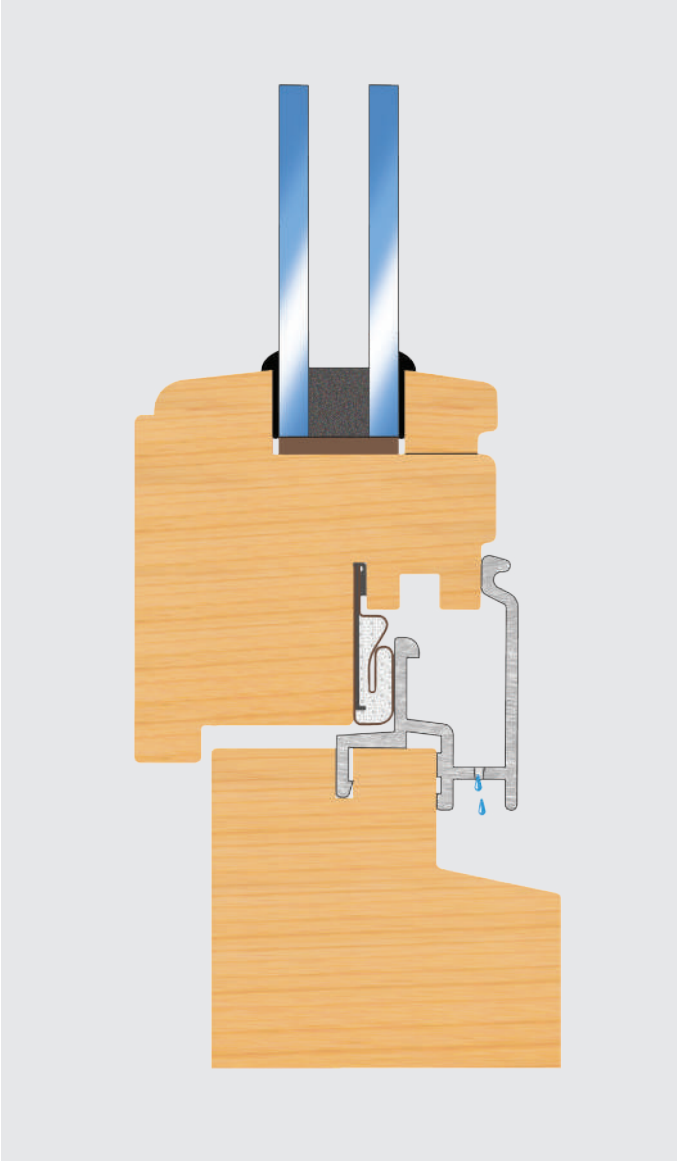

Tilt & Turn Weatherbar - Detail 2

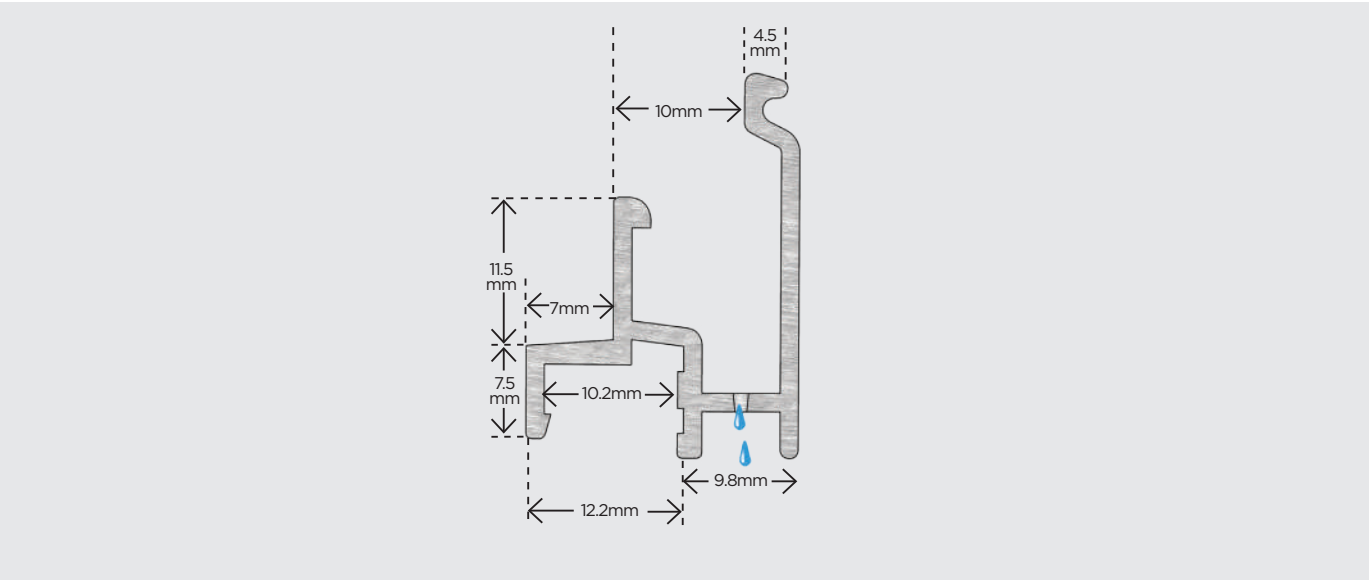

Glazing without external fixings, no damage to paint coating

A Securbead

B Machined Timber Bead

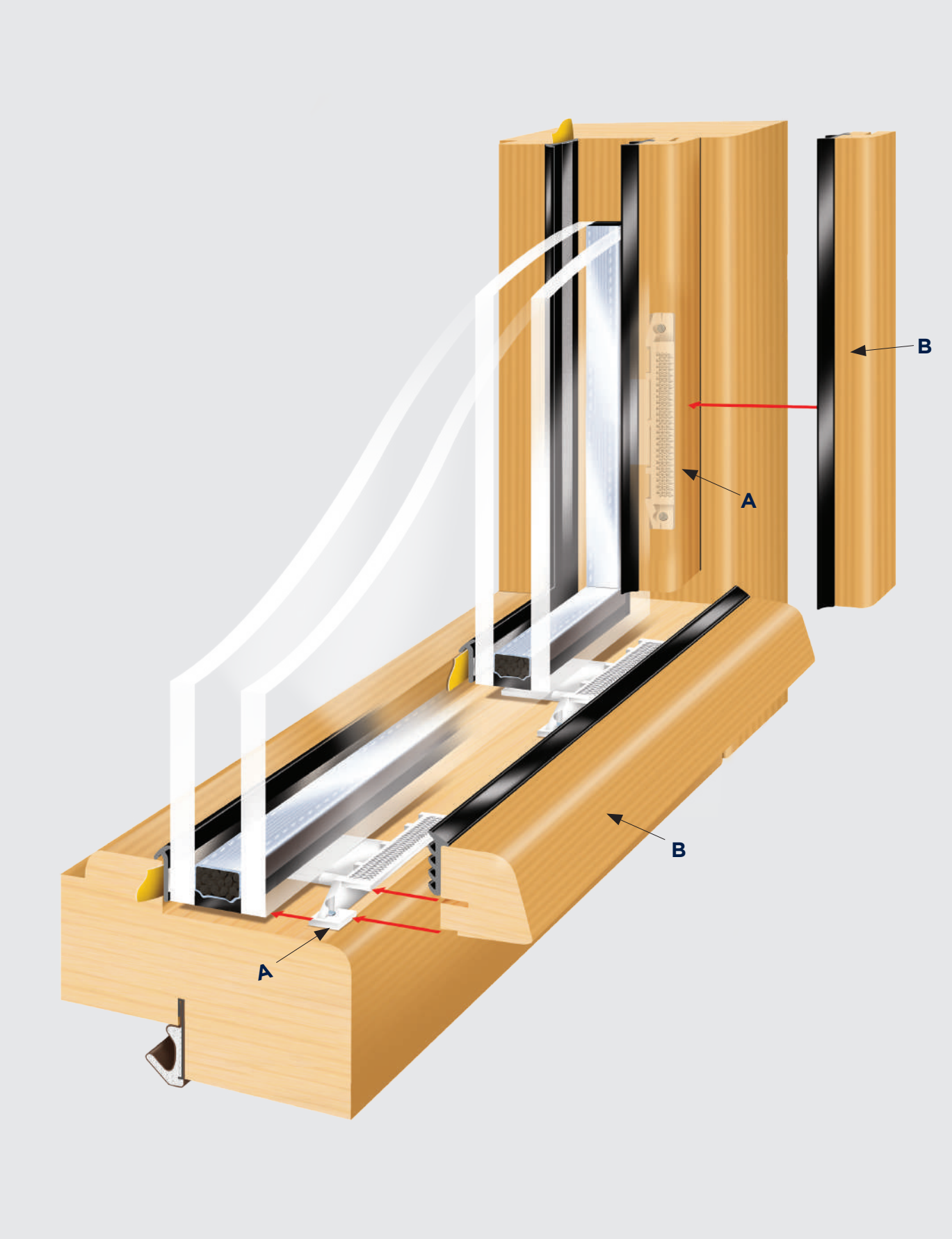

Securbead 1mm

Ref: SCB/1mm

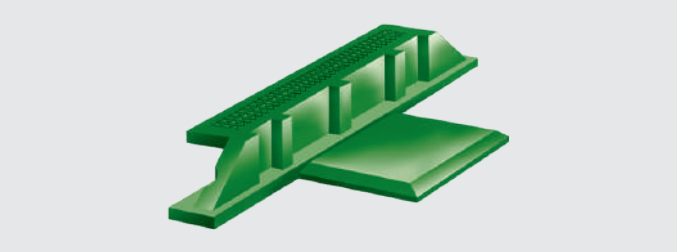

Securbead 2mm

Ref: SCB/2mm

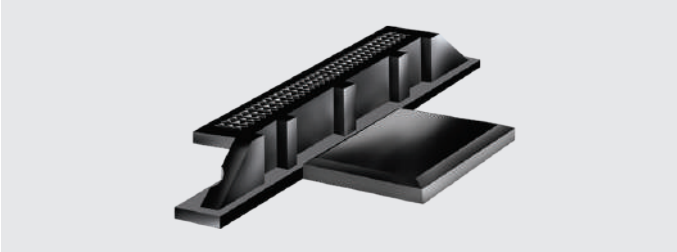

Securbead 3mm

Ref: SCB/3mm

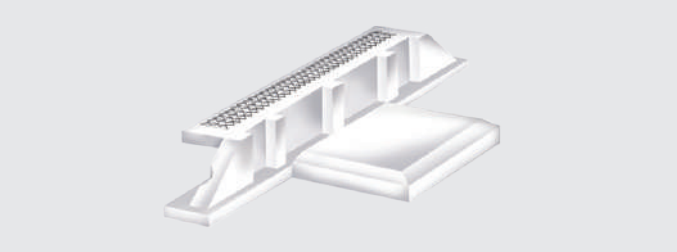

Securbead 4mm

Ref: SCB/4mm

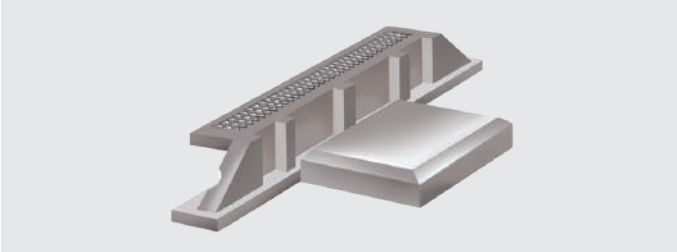

Securbead 5mm

Ref: SCB/5mm

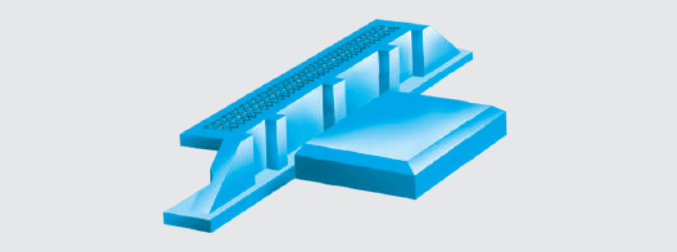

Securbead 6mm

Ref: SCB/6mm

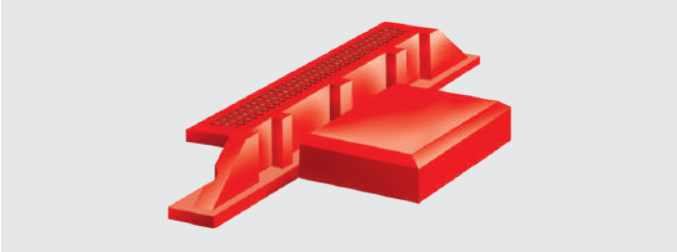

Securbead 6mm Anchoring Groove

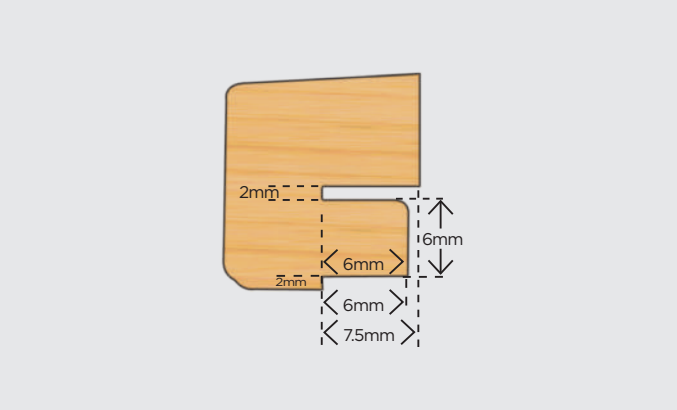

Securbead 9mm Anchoring Groove

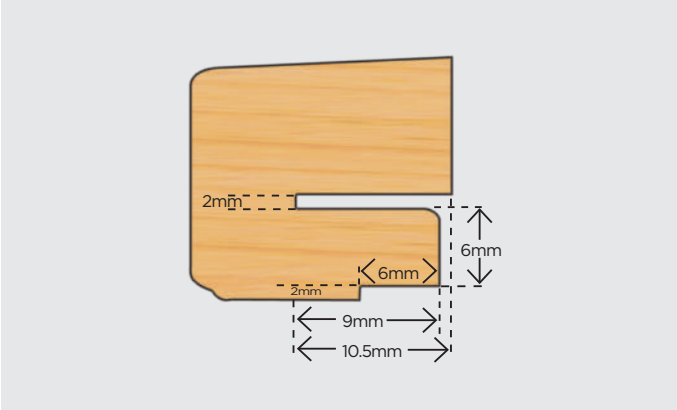

Automatically spaces the double glazed unit with a choice of 1mm to 6mm colour coded packer

Available for 14mm or 20mm double glazed units - please specify

Available with 6mm or 9mm anchoring tongue - please specify

Supplied with stainless steel staples

Optional air stapler available

Glazing without external fixings, no damage to paint coating

A Lokbead

B Machined Timber Bead

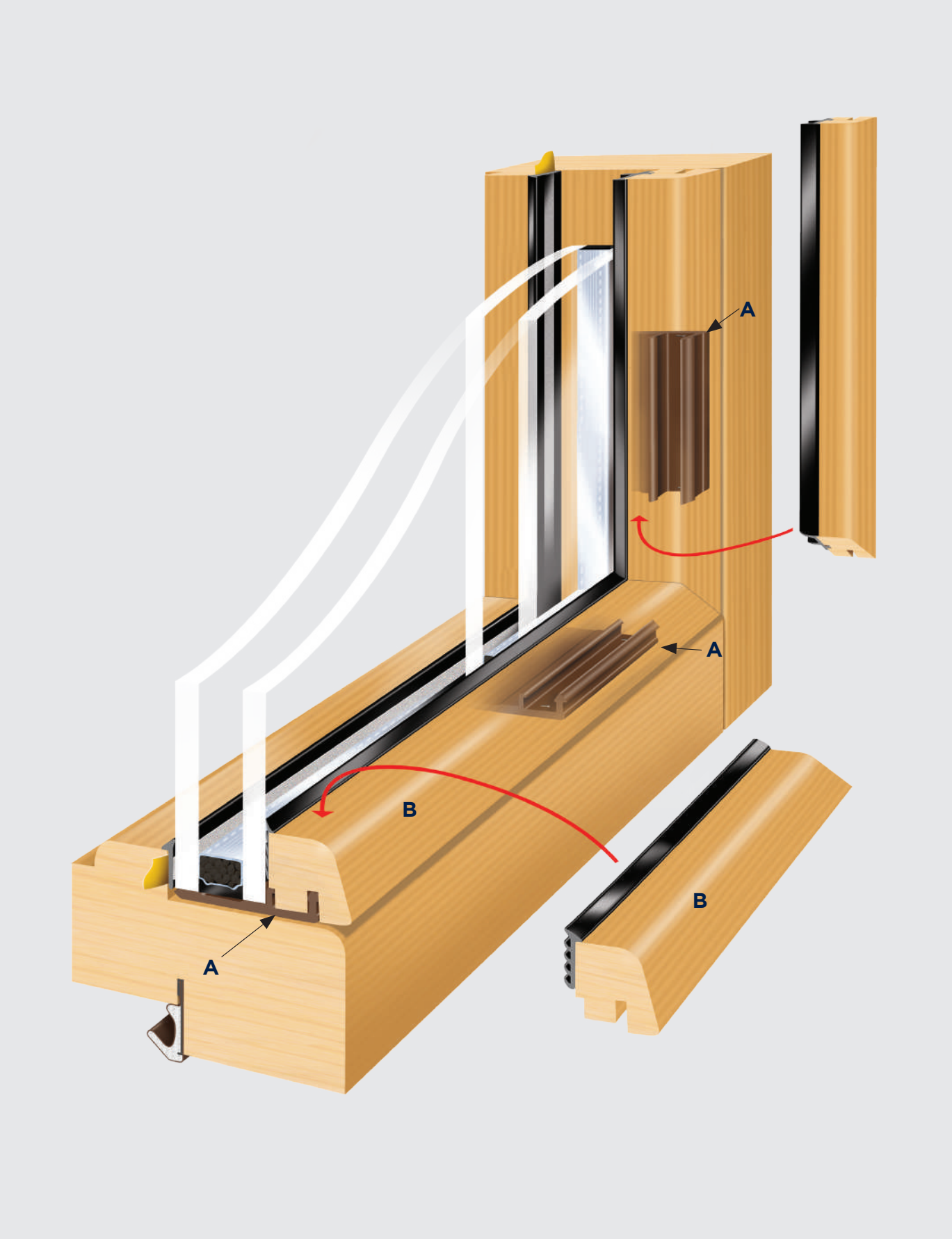

Standard Lokbead

A Double Sided Security Glazing Tape

B DG units

C Glazing Gasket RT 2 x 12

Ref: 1.10.0200

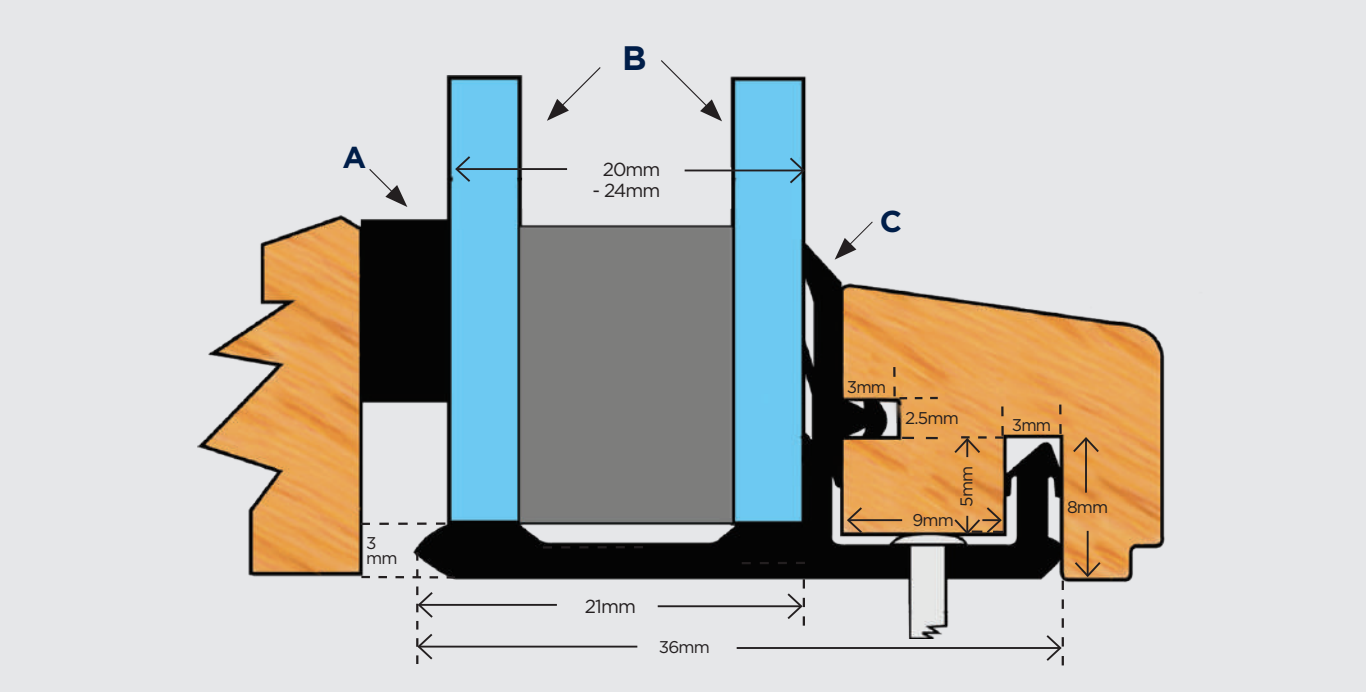

Mini Lokbead

A Double Sided Security Glazing Tape

B DG units

C Dry Glaze or Press Fit Glazing Gasket RT 2 x 12

Ref: 1.10.0201

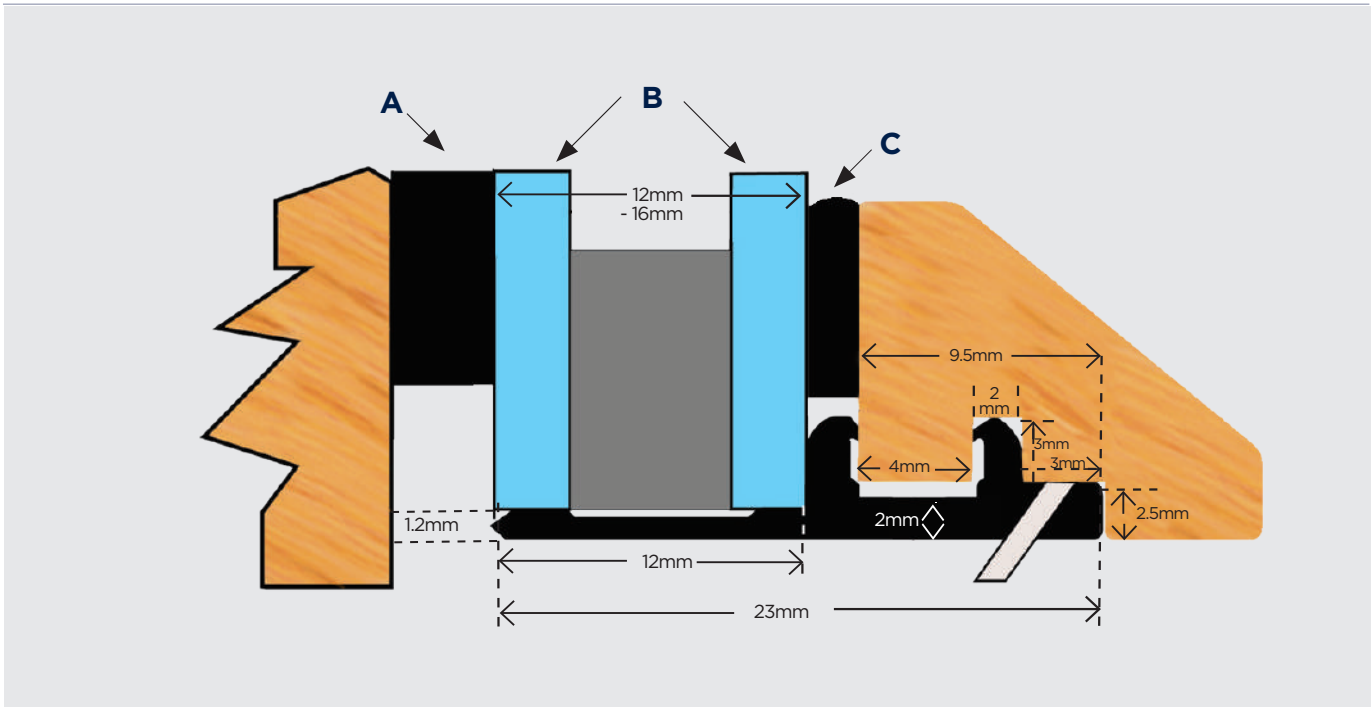

For Ventilated & Drained Bottom Timber Beads

A Timber Bead Glazing Clip

B Machined Timber Bottom Bead

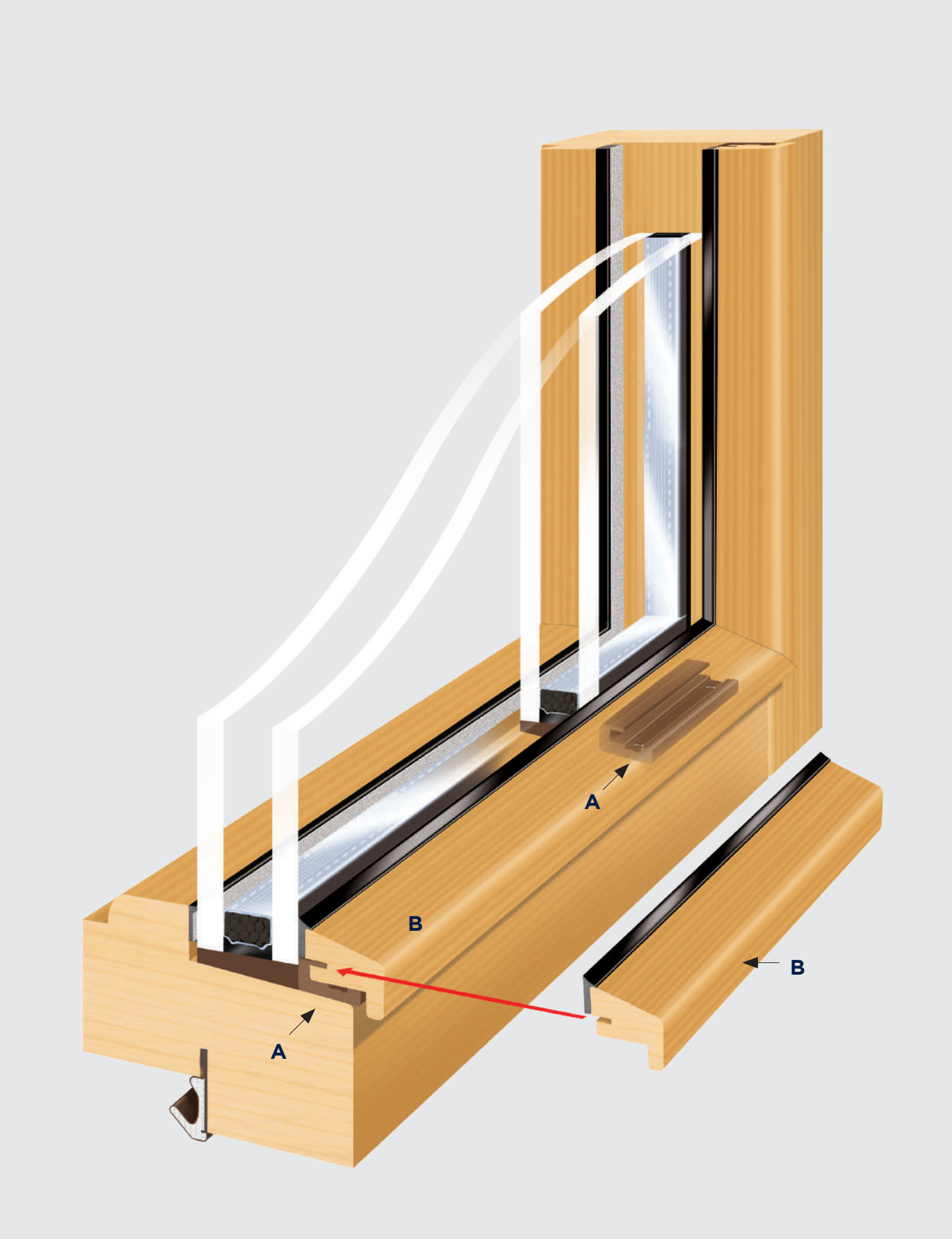

Timber Bead Glazing Clip for Flat Rebates

A Timber Bead Glazing Clip

B Dry Glazing Gasket

C Security Glazing Tape

Ref: 1.10.0205

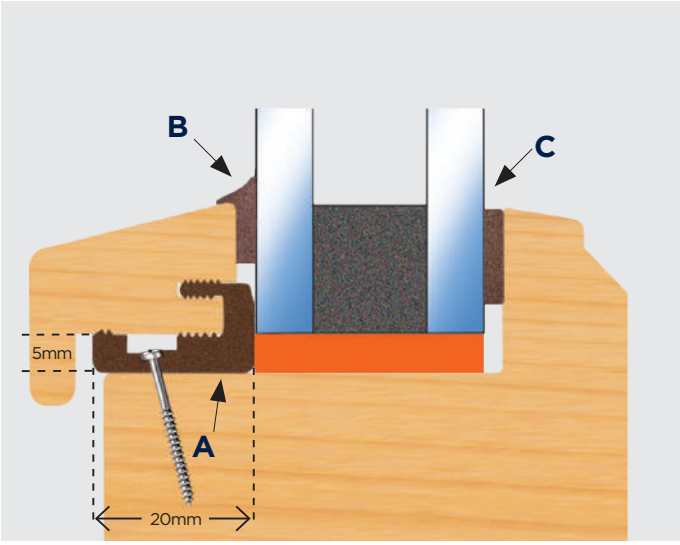

Timber Bead Glazing Clip for Angled Rebates

A Timber Bead Blazing Clip

B Dry Glazing Gasket

C Security Glazing Tape

Ref: 1.10.0206

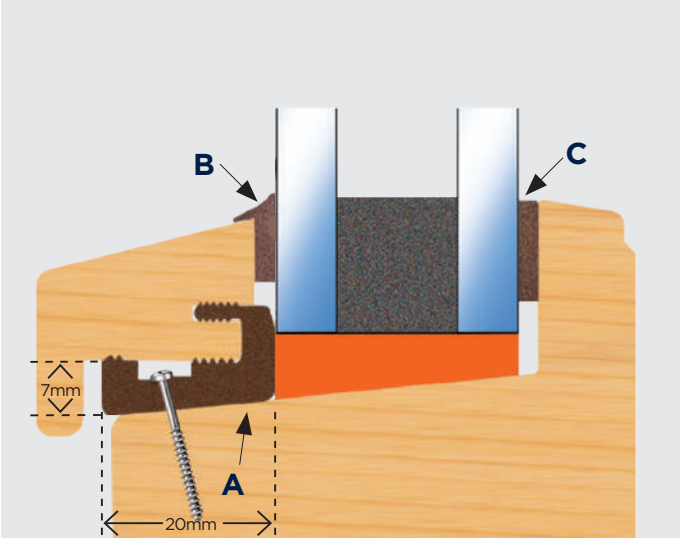

Timber Bead Glazing Clip - Machining Detail

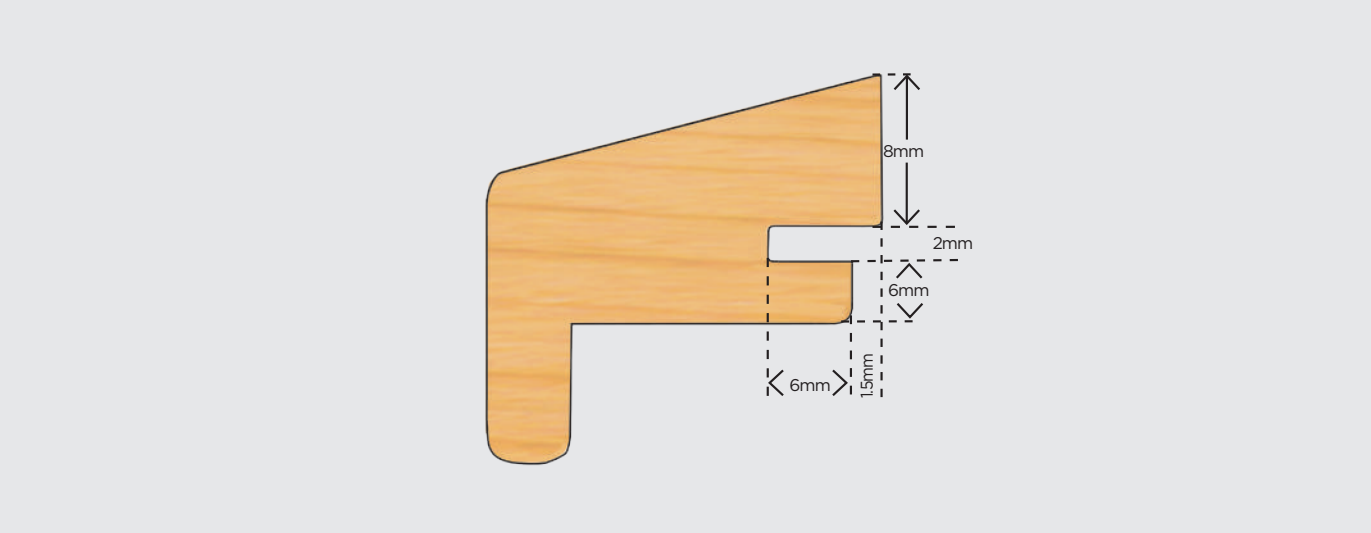

Posilok End Caps

End Caps available for all sizes of PSL & PWT/17

Available in black, brown & white

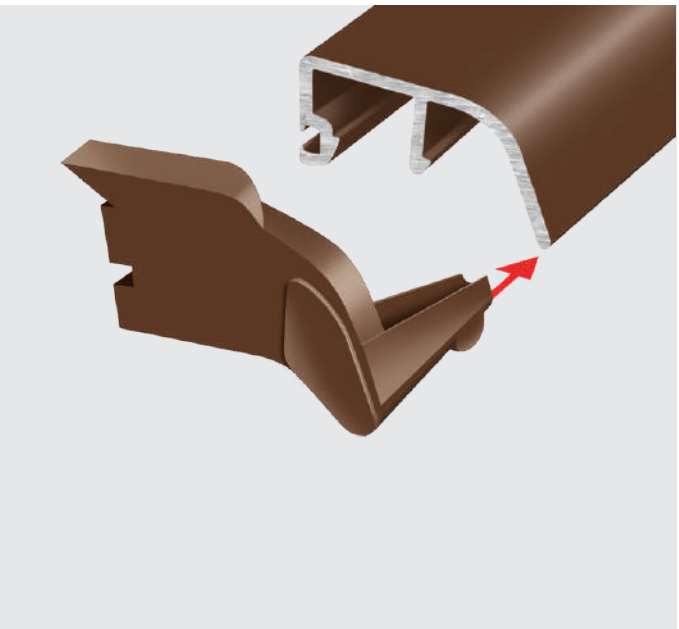

PSL combined Flat Anchoring & Setting Blocks

Available with 3mm or 6mm platform

To suit 20, 24 & 28mm DGU's

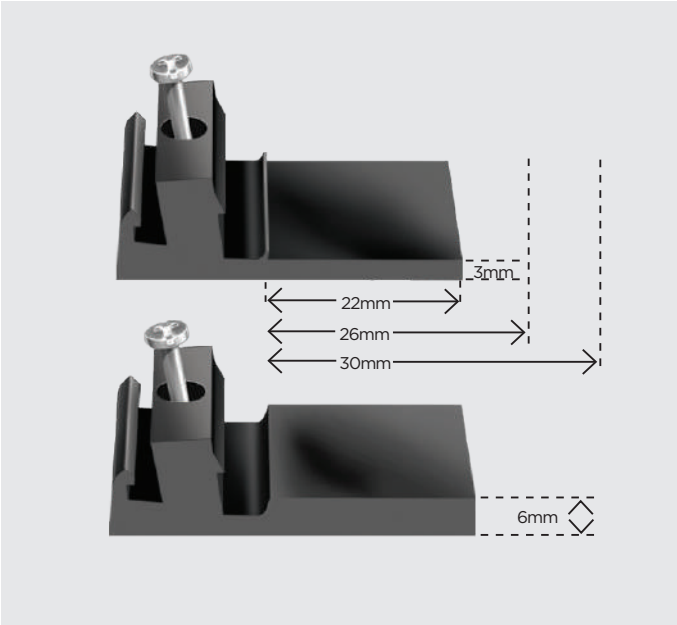

PSL Combined Angled Anchoring & Setting Blocks

To suit 20mm, 24mm, & 28mm DGU's

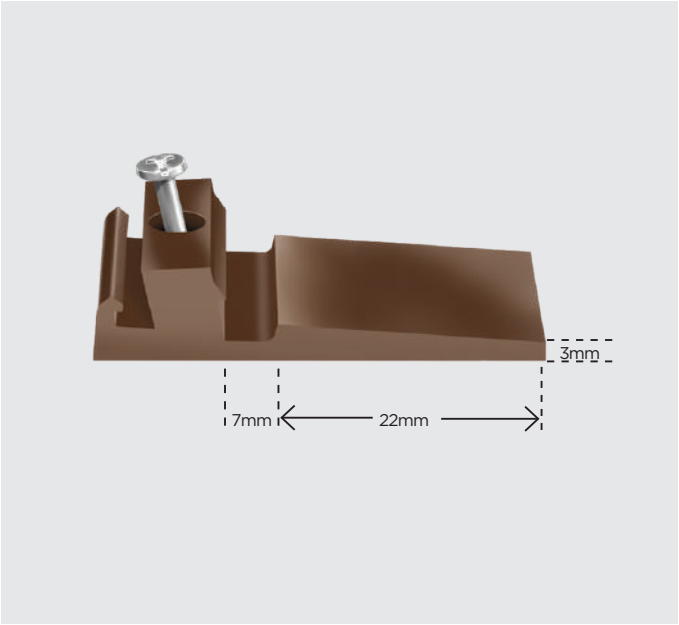

PWT & PSL Fixing & Spacer Blocks

Allows additional clearance & drainage

A 3mm flat spacer for PWT

B 5mm flat spacer for PSL

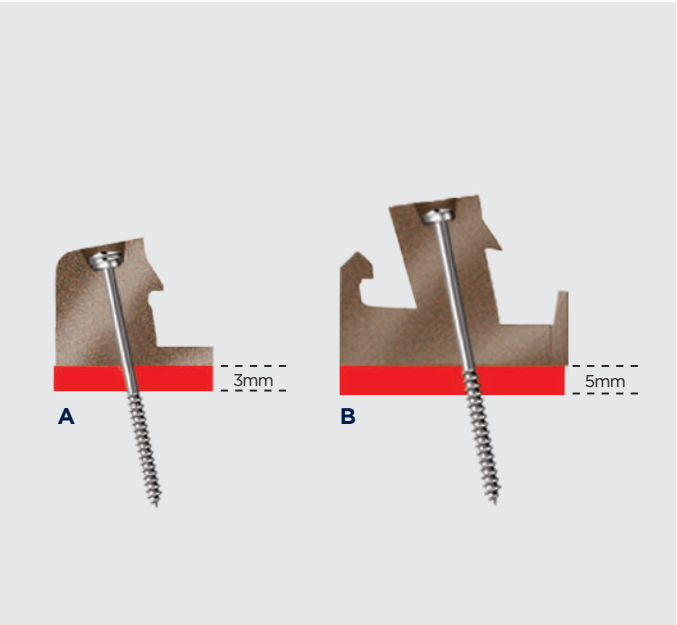

Flat Setting Blocks

Available to suit 20 DGU's

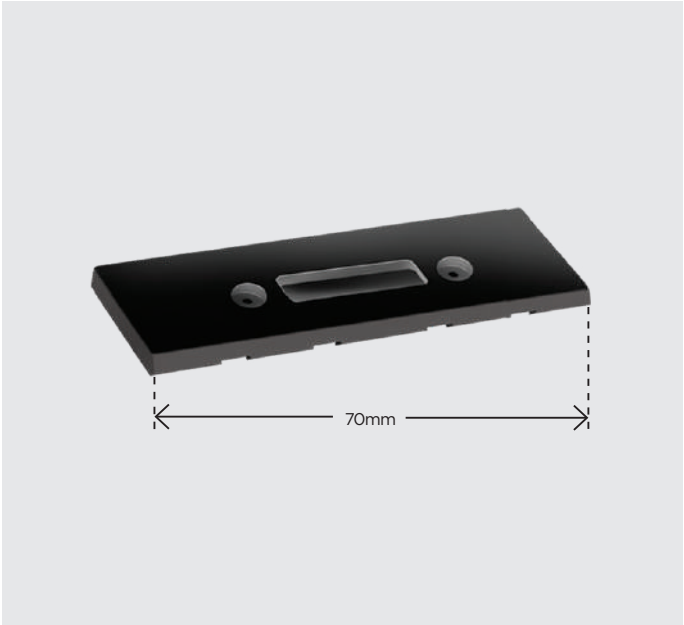

Angled Setting Blocks

Available to suit 14, 20 & 28 DGU's

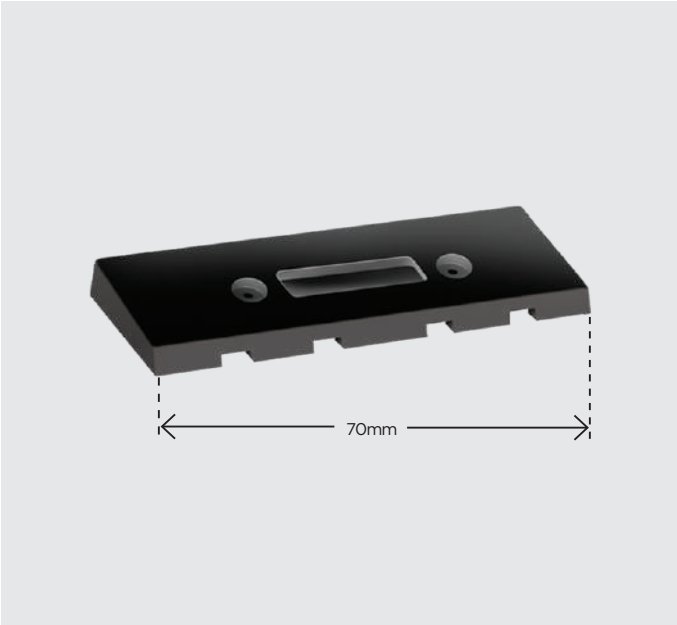

Tapered Wedge Packers for sides & top

Available to suit 14, 20, 24 and 28 DGU's

Elast-O-Sealant

All weather sealant

Can be applied to wet surfaces

Available in black, brown, white, grey & clear

Ref: 1.18.0400

Intumescent Fire & Smoke Seals for Fire Door Assemblies

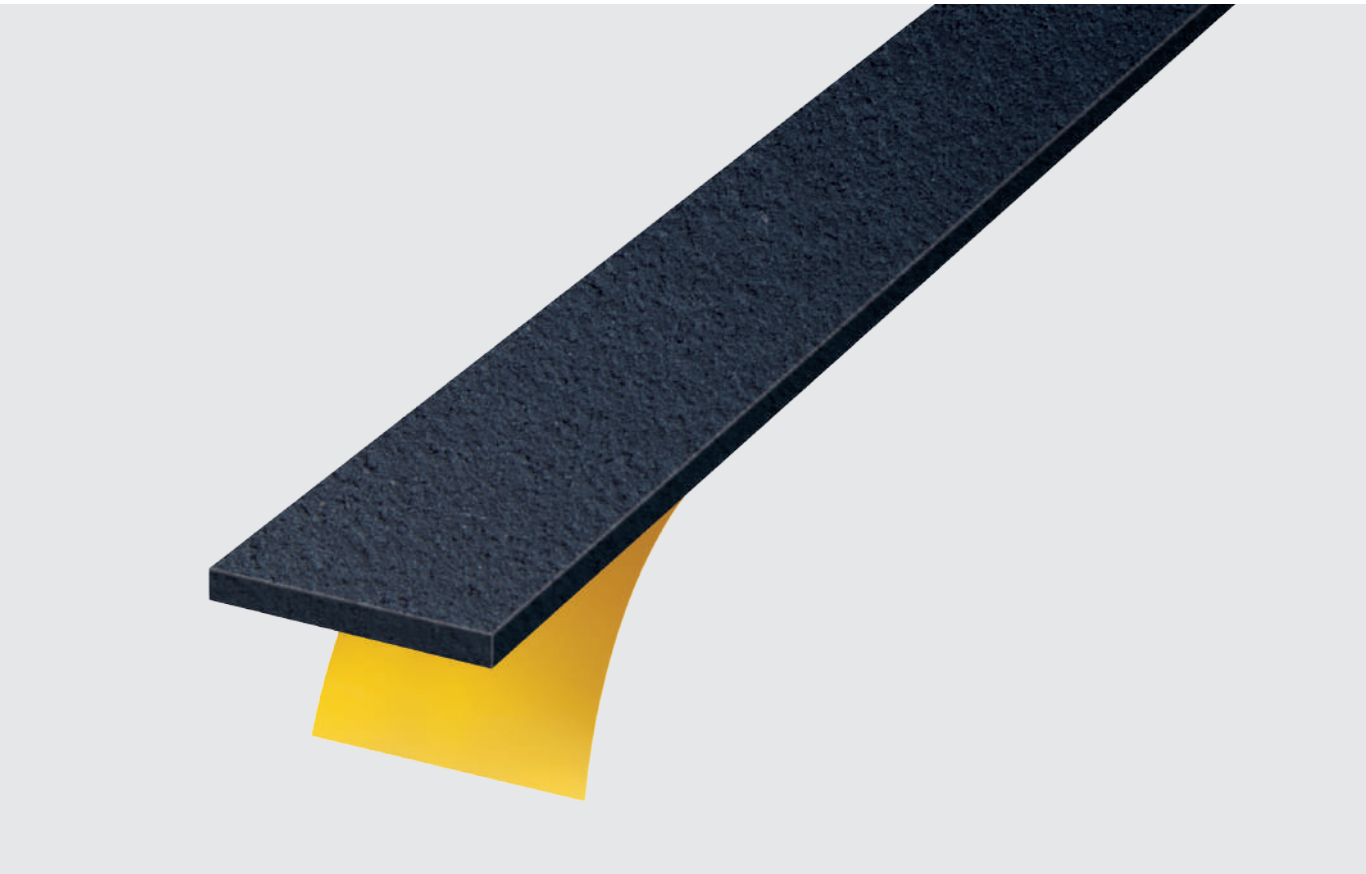

Specification

A graphite based intumescent fireseal contained within a PVC carrier.
The seals are self-adhesive & are rebated into either the doorframe or the door edge.
In the event of a fire the seal expands to many times its original volume & seals the gap around the door to provide an effective barrier against the passage of fire, smoke & hot gases.

Exitex Intumescent Fireseals are available with or without a cold smoke seal in the form of a grey nylon pile or a black neoprene rubber draught seal.

Exitex smoke seals provide a permanent barrier to smoke – particularly important as smoke fumes travel faster & further than the fire itself.

They also have acoustic & thermal applications.

Certifire Approved

Tested for 30 minutes with 10mm & 15mm to BS 476 part 22 & 31.1.

Tested for 60 minutes with 20mm, 25mm & 30mm to BS 476 part 22 & 31.1.

Smoke seals tested to EN1634-3.

Tested to 100,000 open / close cycles.

To seal the bottom of the door please refer to our range of weatherbars in our Weatherbars, Door Surrounds & DIY Products brochure.

Fire only

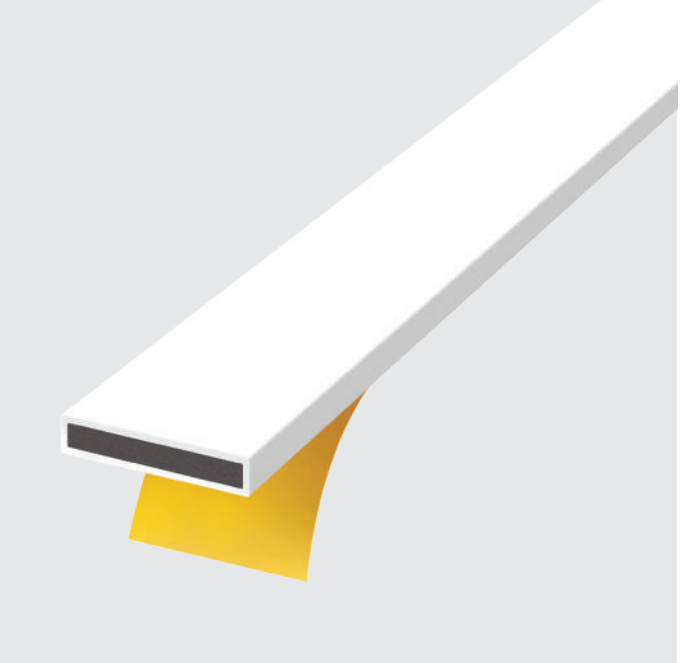

Product Ref	Profile Size	Type	Fire Rating	Length	Colours
Ref: 1.31.0001	10mm x 4mm	Fire Only	30mins	2.1m	White/Brown
Ref: 1.31.0002	15mm x 4mm	Fire Only	30mins	2.1m	White/Brown
Ref: 1.31.0003	20mm x 4mm	Fire Only	60mins	2.1m	White/Brown
Ref: 1.31.0004	25mm x 4mm	Fire Only	60mins	2.1m	White/Brown
Ref: 1.31.0005	30mm x 4mm	Fire Only	60mins	2.1m	White/Brown

Fire & Smoke Seal

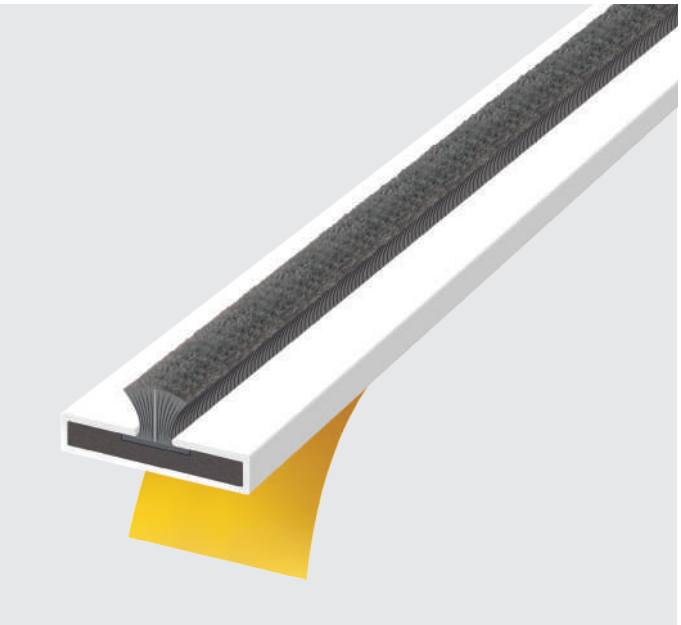

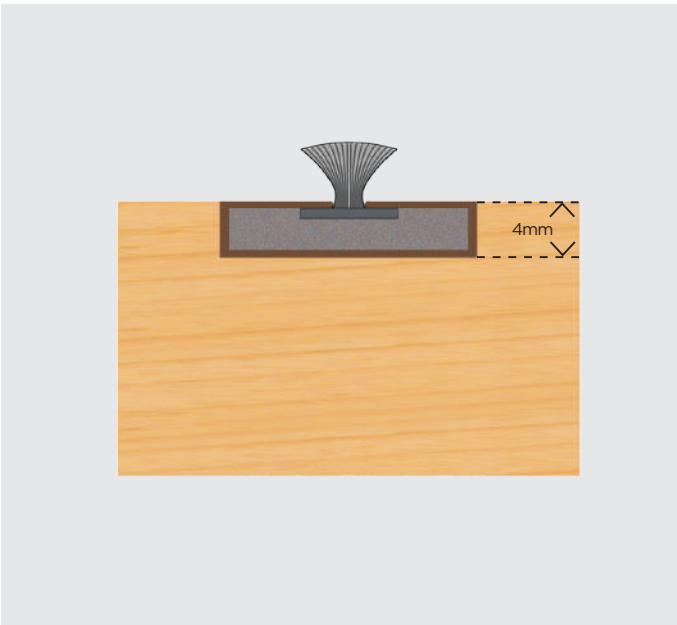

Product Ref	Profile Size	Type	Fire Rating	Length	Colours
Ref: 1.31.0101	10mm x 4mm	Fire & Smoke	30mins	2.1m	White/Brown
Ref: 1.31.0102	15mm x 4mm	Fire & Smoke	30mins	2.1m	White/Brown
Ref: 1.31.0103	20mm x 4mm	Fire & Smoke	60mins	2.1m	White/Brown
Ref: 1.31.0104	25mm x 4mm	Fire & Smoke	60mins	2.1m	White/Brown
Ref: 1.31.0105	30mm x 4mm	Fire & Smoke	60mins	2.1m	White/Brown

Fire & Smoke with Single Flipper

Product Ref	Profile Size	Type	Fire Rating	Length	Colours
Ref: 1.31.0021	10mm x 4mm	Fire & Smoke	30mins	2.1m	White/Brown
Ref: 1.31.0022	15mm x 4mm	Fire & Smoke	30mins	2.1m	White/Brown
Ref: 1.31.0023	20mm x 4mm	Fire & Smoke	60mins	2.1m	White/Brown
Ref: 1.31.0024	25mm x 4mm	Fire & Smoke	60mins	2.1m	White/Brown
Ref: 1.31.0025	30mm x 4mm	Fire & Smoke	60mins	2.1m	White/Brown

Fire & Smoke with Double Flipper

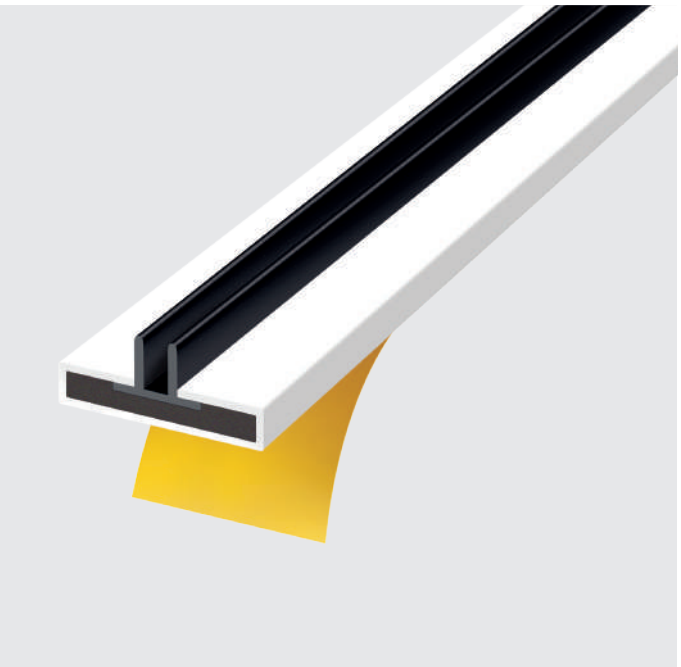

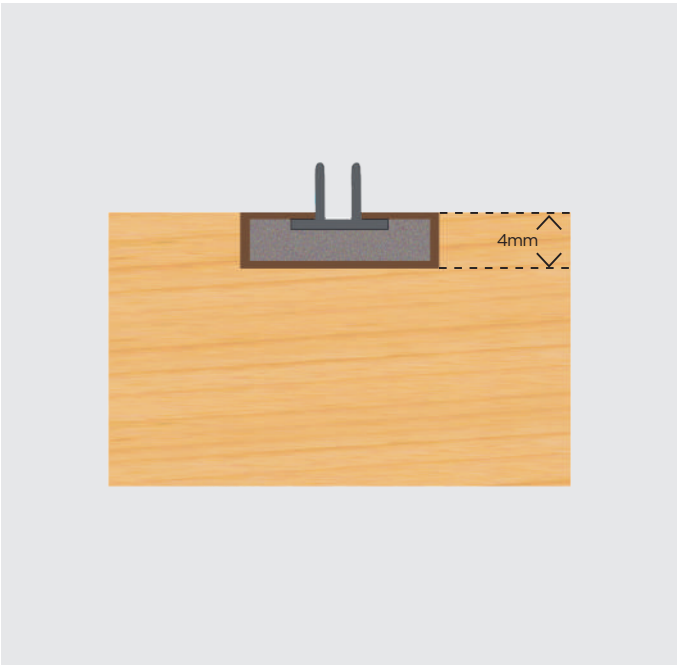

Product Ref	Profile Size	Type	Fire Rating	Length	Colours
Ref: 1.31.0011	10mm x 4mm	Fire & Smoke	30mins	2.1m	White/Brown
Ref: 1.31.0012	15mm x 4mm	Fire & Smoke	30mins	2.1m	White/Brown
Ref: 1.31.0013	20mm x 4mm	Fire & Smoke	60mins	2.1m	White/Brown
Ref: 1.31.0014	25mm x 4mm	Fire & Smoke	60mins	2.1m	White/Brown
Ref: 1.31.0015	30mm x 4mm	Fire & Smoke	60mins	2.1m	White/Brown

Concealex A1502

Inward & Outward

Ref: 1.01.0100

PART M

Automatic Door Bottom Seal

Acoustic rating - 41db

Can be trimmed up to 100mm

In sizes 0.8m, 0.9m, 1m, 1.1m, 1.2m, 1.3m & 1.4m

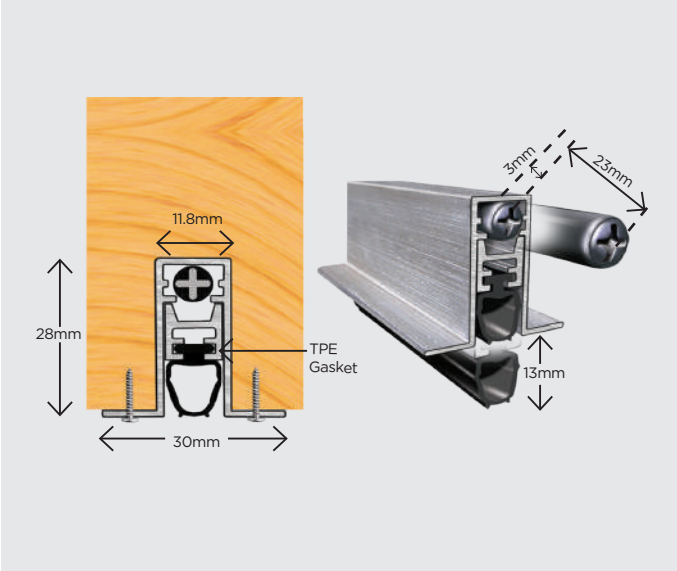

Concealex A1001

Inward & Outward

Ref: 1.01.0101

PART M

Automatic Door Bottom Seal

Acoustic rating - 45db

Tested to DIN 18095-2 smoke control doors

Tested to DIN 4102-5 fire control doors

Can be trimmed up to 100mm

In sizes 0.8m, 0.9m, 1m, 1.1m, 1.2m, 1.3m & 1.4m

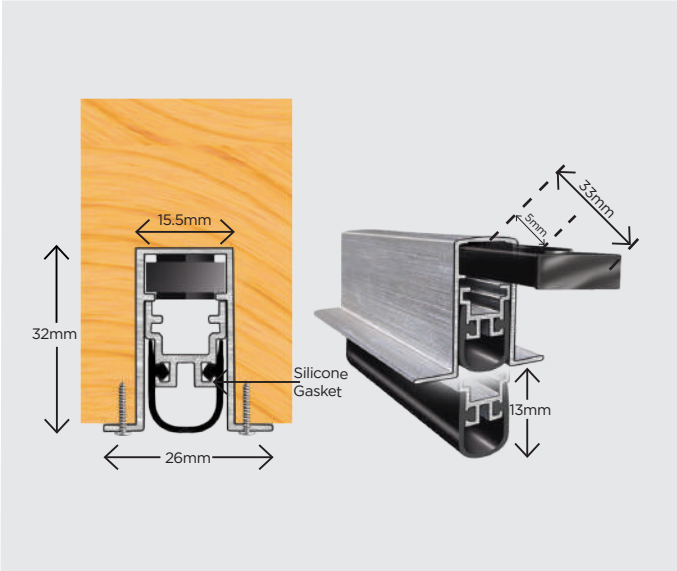

Brochure Range

_ Acoustic Seals Range
_ Capex & Cresfinex
_ Fire Protection
_ Weatherbars, Door Surrounds & DIY Products

Exitex Limited
Dundalk, Ireland,
A91 HK29

+353 42 937 1244
info@exitex.com

exitex.com

exitex™