Technical Specification

Control Point	Head (m)	Flow (l/s)
Primary Design	1.950	3.000
Flush-Flo™	0.310	2.214
Kick-Flo®	0.630	1.794
Mean Flow		2.282

hydro-int.com/patents

Hydro-Brake® Optimum Flow Control including:

- 3 mm grade 304L stainless steel
- Integral stainless steel pivoting by-pass door allowing clear line of sight through to outlet, c/w stainless steel operating rope
- Beed blasted finish to maximise corrosion resistance
- Stainless steel fixings
- Rubber gasket to seal outlet
- Variable flow rate post installation via adjustable inlet
- Indicative Weight: 10 kg

BBA APPROVAL INSPECTION TESTING CERTIFICATION CERTIFICATE 08/4596

wrc approved PT/503/0422 Valid: 01/04/2022 - 31/03/2027

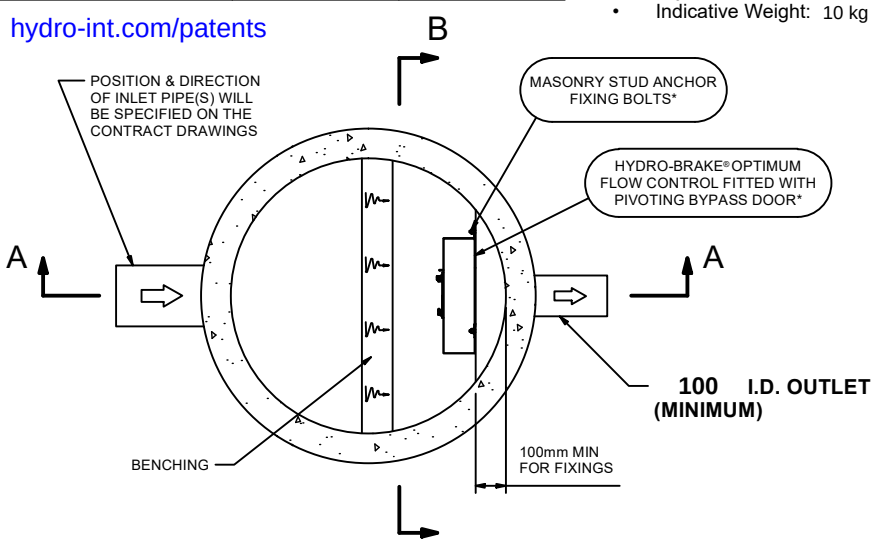

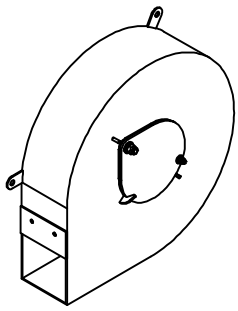

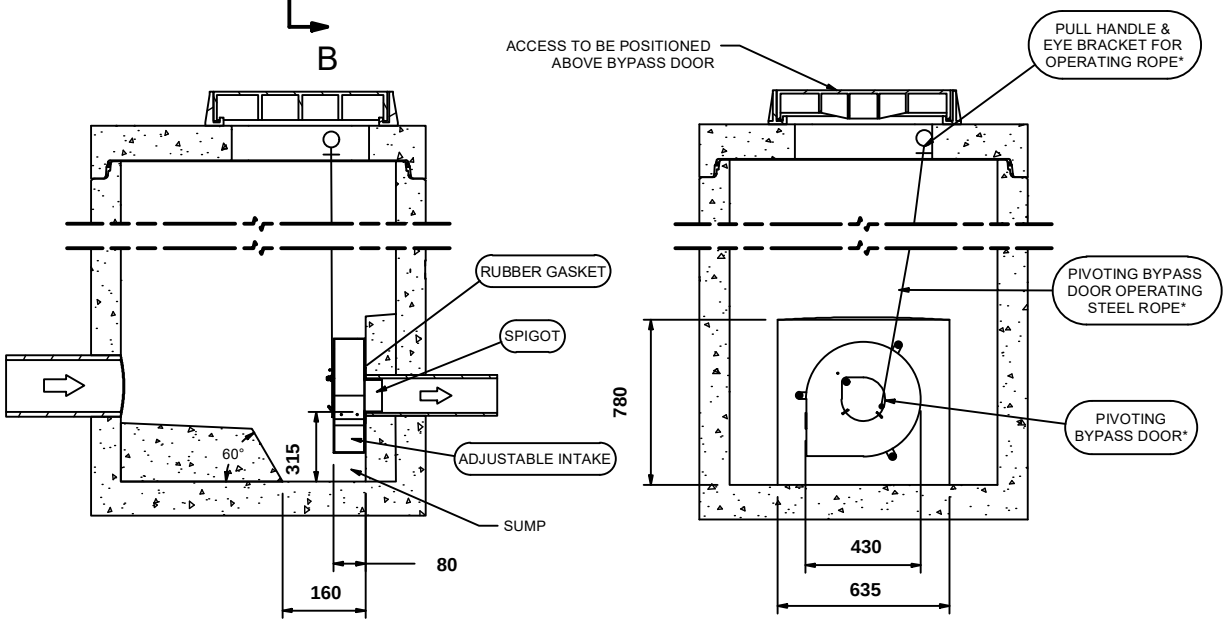

SECTION A-A

SECTION B-B

IMPORTANT: ⬭ LIMIT OF HYDRO INTERNATIONAL SUPPLY
THE DEVICE WILL BE HANDED TO SUIT SITE CONDITIONS
FOR SITE SPECIFIC DETAILS AND MINIMUM CHAMBER SIZE REFER TO HYDRO INTERNATIONAL
ALL CIVIL AND INSTALLATION WORK BY OTHERS
* WHERE SUPPLIED
HYDRO-BRAKE® FLOW CONTROL & HYDRO-BRAKE® OPTIMUM FLOW CONTROL ARE REGISTERED TRADEMARKS FOR FLOW CONTROLS DESIGNED AND MANUFACTURED EXCLUSIVELY BY HYDRO INTERNATIONAL

THIS DESIGN LAYOUT IS FOR ILLUSTRATIVE PURPOSES ONLY. NOT TO SCALE.

DESIGN ADVICE !

The head/flow characteristics of this SHE-0071-3000-1950-3000 Hydro-Brake® Optimum Flow Control are unique. Dynamic hydraulic modelling evaluates the full head/flow characteristic curve.
The use of any other flow control will invalidate any design based on this data and could constitute a flood risk.

Hydro International A CRH COMPANY

DATE	26/04/2024 15:04
SITE	
DESIGNER	Sharon King
REF	

SHE-0071-3000-1950-3000

Hydro-Brake® Optimum

© 2024 Hydro International Ltd • Unit 2, Rivermead Court • Kenn Business Park • Windmill Road • Kenn • Clevedon • BS21 6FT • Tel: 01275 878371 • www.hydro-int.com • Email: enquiries@hydro-int.com

sking@hydro-int.com