T2 VEHICLE DIRECTIONAL SIGNAGE TOTEM

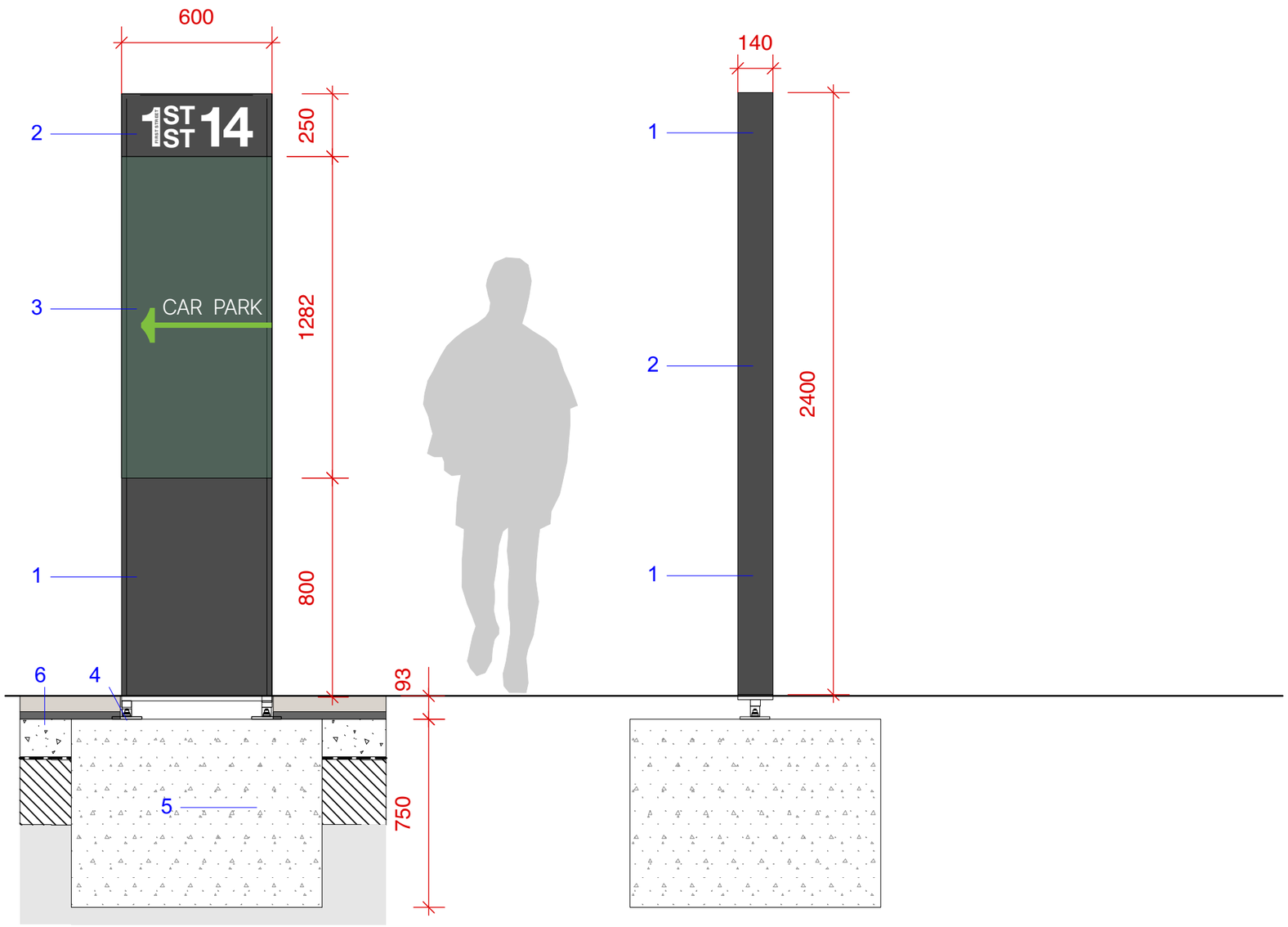

T2 Vehicle directional signage totem

Product: WAY2GO wayfinding totem
Supplier: IS Group
Dimensions: 2400 (H) x 600 (W) x 140 (D) mm
Configuration: Single - configuration 3
With integrated lighting.

1. Totem to have galvanised steel internal structural frame, exposed framework/paneling to be 3mm powder coated aluminium, colour RAL 7016, satin finish.

2. Fret cut powder coated aluminium panel, colour RAL 7016, satin finish. To include Acrylic backing and light sheet.

3. Hidden fixed toughened glass panel. Glass to have colour (tbc) transfer sheet to back. Panel to have bespoke plasma cut pattern, tbc. Panel to be backlit by internal LED light sheet to ensure even distribution of light.

4. Base fixed to concrete foundations with resin bolts or boltcage. To manufacturers design and recommendations (Base type 2).

5. Concrete foundation: 1000mm(w) x 1000mm(l) x 750mm(d) Subject to local ground conditions and to engineers details and specifications.

6. S1 Yorkstone flag paving

Plan View

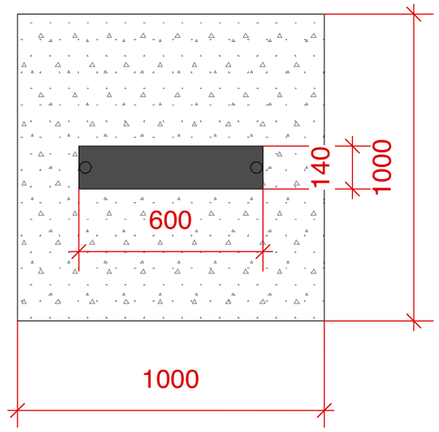

This drawing is copyright protected and may not be reproduced in whole or part without written authority from the owner.

NOTES:
1. Do not scale from this drawing.
2. Always work to noted dimensions.
3. All dimensions are in millimetres unless otherwise stated.
4. All setting out, levels and dimensions to be agreed on site.
5. The dimensions of all materials must be checked on site before being laid out.
6. This drawing must be read with the relevant specification clauses and detail drawings.
7. Order of construction and setting out to be agreed on site.

DESIGN INTENT

Revision	Date	Description	Drawn	Apprvd.
C01	01-05-24	S4 - First issue - Standard size	VE/VS	RM

PLANIT

Manchester | London | Liverpool | Leeds | Standish

Manchester
2 Back Grafton Street,
Altrincham,
Cheshire,
WA14 1DY

W: planit-ie.com
E: info@planit-ie.com
T: 0161 928 9281

Client First Street Developments LTD

Project First Street Plot 9

Drg Title T2 Vehicle Directional Signage Totem

Created on	Created by	Approved by
30-04-24	VE / VS	RM

Scale	Size	Workstage
1:20	A3	Stage 5

Drg No.	Suitability	Revision
MN2A-PLA-ZZ-00-DR-L-009001	S4	C01

© Planit I.E. Limited