Conditions Discharge Supporting Document (App No:136035/FO/2023. Appeal Ref: APP/B4215/W/23/3336057)

Unit A, 48 Derby Street

Manchester

M8 8HN

Proposal: Erection of new self-contained commercial unit.

September 2024

Prepared by: Building Design Services (BDS), 6 Stock Close, Shawclough, Rochdale, OL12 6BB.

E-mail: bds2000@live.co.uk

This Supporting Document is submitted by Building Design Services to Manchester City Council on behalf of the applicant Mr Shamaz Subhani to discharge conditions attached to planning application 136035/FO/2023. Planning permission was refused by the Council and subsequently allowed at Appeal on 17th May 2024 and consented for the "Erection of new self-contained commercial unit".

This application seeks consent for the discharge of the following conditions;

3. Materials Details

4. Servicing Strategy

5. Construction Method Statement

8. Plant and Machinery

9. Contamination Risk Assessment

10. Bicycle Parking Facilities

11. Security Measures

The applicant would like to work with the Council in order to secure approval for the proposed use.

I trust everything is in order and that the application can be progressed without delay. If you have any queries, please do not hesitate to contact me.

2. MATERIALS DETAILS

'Prior to any above ground, details/samples of the materials to be used in the construction of the external surfaces of the proposed building hereby permitted shall have been submitted to and approved in writing by the local planning authority. Development shall be carried out in accordance with the approved details/samples'.

Walls

Ibstock heritage red blend stock facing brick to ground floor – see elevations plans.

First floor finished in cream corrugated sheeting, similar to adjacent property – see above and specification below. Also see elevations plans.

TECHNICAL SPECIFICATION

Cover width	1000 mm
Thickness	0.5mm
Corrugation pitch	200 mm
Depth of profile	32 mm
Minimum end lap	150 mm

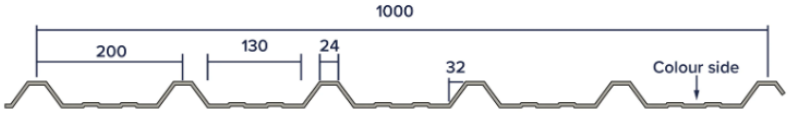

Roof

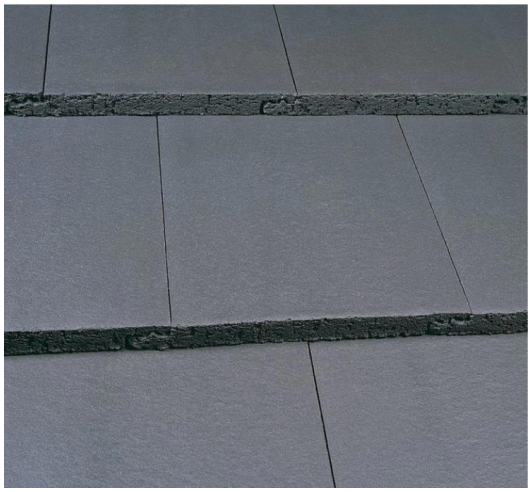

Marley Modern Roof Tile - Smooth Grey – to dual pitched roof

- Material: **Concrete**
-
- Colour: **Smooth Grey**
- Size: **420 x 330mm**

<u>Warehouse front</u>

Aluminium shopfront, colour anthracite, large shop window with glazed aluminium door. Double course brick stallriser. Similar to adjacent property (see above).

Shopfront anthracite aluminium door.

Windows

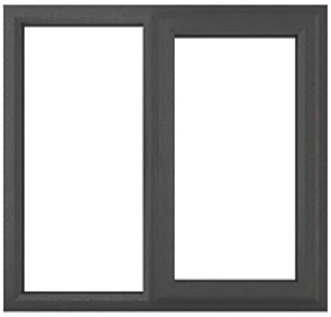

Typical window at first floor level – colour anthracite

Guttering and Soffits

Black coloured guttering and down pipes.

Perforated lath roller shutters to shopfront and side/rear doors. Colour: Anthracite.

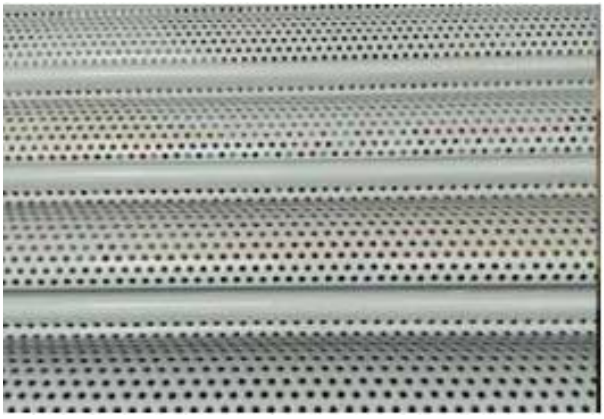

4. SERVICING STRATEGY

'Prior to the first use of the building hereby approved a servicing strategy for the site shall be submitted to and approved in writing by the local planning authority. The servicing strategy shall include delivery hours and details of how deliveries will be managed. The approved scheme shall be implemented before the first use of the building and be operational for the lifetime of the development'.

A separate Servicing Strategy is submitted with this application.

5. CONSTRUCTION METHOD STATEMENT

No development shall take place, including any works of demolition, until a Construction Method Statement has been submitted to, and approved in writing by the local planning authority. The Statement shall provide for: i. the parking of vehicles of site operatives and visitors;

ii. loading and unloading of plant and materials;

iii. storage of plant and materials used in constructing the development;

iv. the erection and maintenance of security;

v. wheel washing facilities;

vi. measures to control the emission of dust and dirt during construction;

vii. a scheme for recycling/disposing of waste resulting from demolition and construction works;

viii. delivery, demolition, and construction working hours.

A separate Site Plan which shows detailed surface water drainage has been submitted with this application.

8. PLANT AND MACHINERY

'Before any plant and/or machinery is mounted externally on the building hereby approved a scheme shall have been submitted to and approved in writing by the local planning authority to ensure that the plant/machinery achieves a rating level of 5dB (LAeq) below the typical background (LA90) level at the nearest noise sensitive location. The plant/machinery shall be installed in full accordance with the scheme before the first use of the plant/machinery and shall be retained thereafter'.

No plant or machinery shall be mounted externally on the building, and no plant or machinery is required given the future use of the property. Therefore, no details are provided as part of this application.

9. CONTAMINATION RISK ASSESSEMENT

No development shall commence until an assessment of the risks posed by any contamination, carried out in accordance with British Standard BS 10175: Investigation of potentially contaminated sites - Code of Practice and the Environment Agency, Model Procedures for the Management of Land Contamination (CLR 11) (or equivalent British Standard and Model Procedures if replaced), shall have been submitted to and approved in writing by the local planning authority. If any contamination is found, a report specifying the measures to be taken, including the timescale, to remediate the site to render it suitable for the approved development shall be submitted to and approved in writing by the local planning authority. The site shall be remediated in accordance with the approved measures and timescale and a verification report shall be submitted to and approved in writing by the local planning authority. If, during the course of development, any contamination is found which has not been previously identified, work shall be suspended and additional measures for its remediation shall be submitted to and approved in writing by the local planning authority. The remediation of the site shall incorporate the approved additional measures and a verification report for all the remediation works shall be submitted to the local planning authority within 21 days of the report being completed and approved in writing by the local planning authority.

A separate Site Investigation Report is submitted with this application.

10. BYCYCLE PARKING

Prior to the first use of the building hereby approved space and facilities for bicycle parking shall have been provided in accordance with details to be submitted to and approved in writing by the local planning authority. The approved space and facilities shall then be retained and permanently reserved for bicycle parking.

Galvanised Finish Cycle Stand - Quality Slimline Cycle Shelter with Sheffield toast rack, including clear side panels. Please see Block plan for positioning.

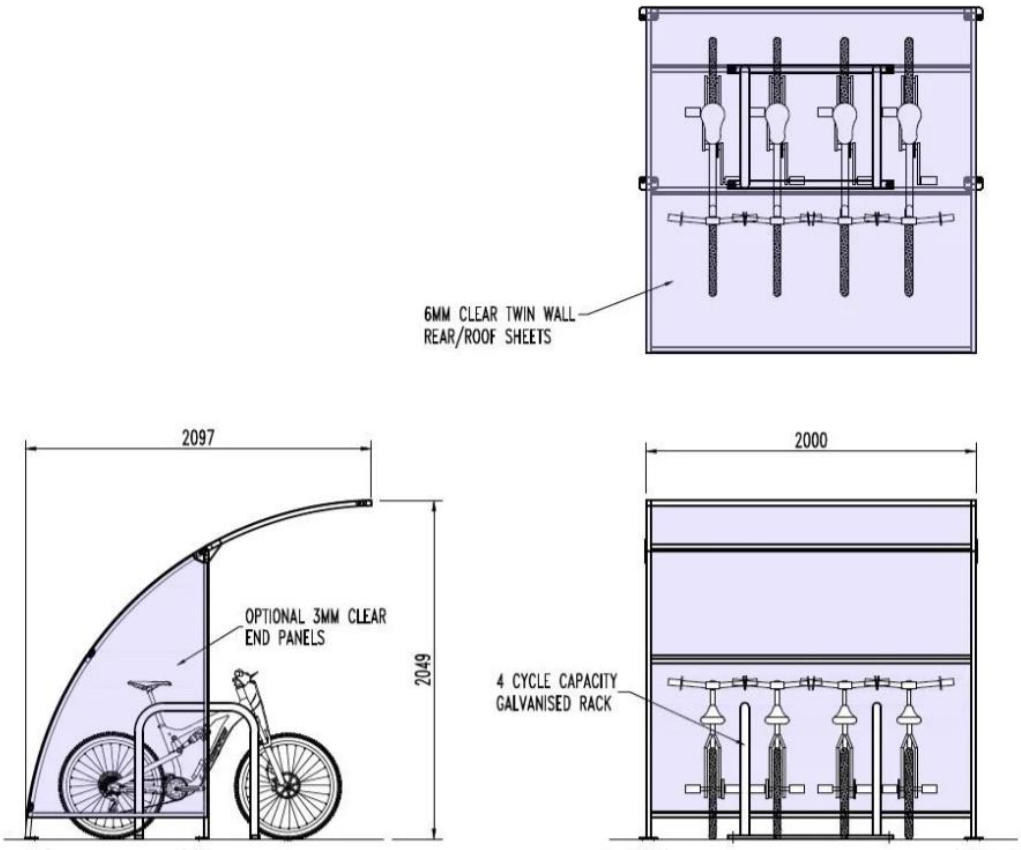

11. SECURITY MEASURES

'Prior to first use of the premises, details of the security measures to be incorporated into the development, which, shall be to secured by design specification, shall be submitted for approval in writing by the local planning authority. The development shall be carried out in accordance with these approved details and shall be implemented prior to first use'.

Secured By Design (SBD) is the UK Police flagship initiative supporting the principles of "designing out crime" through the use of effective crime prevention and security standards for a range of applications. SBD Commercial provides design guidance and specification requirements for commercial premises so as to reduce the risks of crimes against the person or property such as burglary, theft, arson, vehicle crime and assault.

Constructing well designed places, buildings and communities that promote both sustainable communities and health and wellbeing is an objective that the Secured by Design Initiative widely supports; however, it is imperative that they must also be safe, secure, and accessible. Mitigating the opportunities for crime is not only about reducing and preventing injury and crime, but it is also about building strong, cohesive, vibrant, and participatory communities.

Design-led solutions to prevent crime will include ample opportunity for natural surveillance, high quality public lighting, clearly defined and well overlooked defensible spaces, the eradication of unnecessary foot routes and see these routes concentrated together with busier traffic routes, the sensible and sensitive positioning of play and leisure areas, the provision of clear and appropriate boundary treatments and the careful removal of any chances to hide unseen to create ambush points.

In England and Wales, the National Design Guide sets out the characteristics of well-designed places and demonstrates what good design means in practice. Detailed guidance is provided by the National Model Design Codes Parts 1 and 2. The purpose of the National Model Design Code is to provide detailed guidance on the production of design codes, guides and policies to promote successful design. It expands on the ten characteristics of good design set out in the National Design Guide, which reflects the government's priorities and provides a common overarching framework for design.

As 'crime' has a potentially adverse economic, social and environmental impact upon a development, and the National Planning Policy Framework requires that crime and the fear of crime should not undermine quality of life or community cohesion.

Doorset and window materials

Aluminium Products

All windows and doorsets would be constructed from aluminium profile fabricated from designated alloys 6060 or 6063 in tempers T5 or T6 conforming to BS EN 12020-2:2016 or equivalent standard.

Aluminium profiles used in the construction of the frames excluding glazing beads, nibs, interlocks and similar features shall be not less than 1.2 mm thick.

The primary entrance doorset would be fitted with a multi-point locking system that meets the requirements of:

- PAS 3621:2011 (key locking both sides), or
- PAS 8621:2011 (non-key locking on the internal face), or
- PAS 10621:2011 (non-key locking on the internal face – with an external locking override facility)

Non-primary doorsets (side or rear) would be fitted with a multi-point locking system conforming to the standards above.

Glazing within doorsets

All glazing in and adjacent (within 400mm) to doors must include one pane of attack resistant glass that is securely fixed in accordance with the manufacturer's instructions.

If glazed panels are installed adjacent to the doorset and are an integral part of the doorframe then they should be tested as part of the door. Alternatively, where they are manufactured separately from the doorframe, they shall be certificated to either:

- PAS 24:2022, or
- PAS 24:2016*, or
- STS 204, or
- LPS 1175 at a Security Rating to match the doorset,
- STS 202 at a Burglary Resistance to match the doorset

These windows must be securely fixed to the door assembly in accordance with the manufacturer's instructions.

Security Glazing

All ground floor and easily accessible glazing must incorporate one pane of laminated glass or glass tested to BS EN 356:2000 Glass in building. Security glazing – resistance to manual attack to category P1A unless it is protected by a roller shutter or grille.

Occasionally, when large laminated glazed panels are used on south facing elevations, there have been incidents of glazing failure, or cracking, due to thermal stress. Whilst the use of toughened glass would seem to be a simple solution to the problem of thermal stress, ordinary toughened glass offers no security resistance. It is therefore recommended that the inner pane of glass used in a double glazed unit is 'laminated toughened'. This combination of the two sheets of toughened glass and the interlayer offers both resistance to intrusion and thermal stress associated with large glazed areas. Specifiers are reminded that the minimum requirement for SBD is BS EN 356:2000 P1A.

Boundaries

Boundaries fall into three main categories: Secured: These could be a wall, hedge or other boundary treatment which is intended to physically prevent climbing and/or access to restricted parts of a site. A good secure boundary around the entire site and, in the case of an open plan development, to the rear and/or side of a building, will frustrate an intruder intent on breaking in and will also serve to limit the size and quantity of goods that can be easily removed.

Internal lighting

It is recommended that most internal office lighting is operated by detection devices which will automatically switch lights on and off due to movement or the absence of movement in each room. Apart from being a considerably more efficient method for reducing energy consumption (does not require a deliberate and remembered action by the user) such a system will identify the presence and progress of intruders in the building when it is closed. It therefore follows that the controlling mechanisms for the system should be contained securely

CCTV

Although CCTV is not a solution to all security problems it can help deter criminals and assist with the identification of offenders after a crime has been committed. If a CCTV system has a recording facility only, it can be a useful investigate tool whereas a monitored system allows a real-time reaction to criminal activity. CCTV is also often very useful in mitigating against risk where other forms of security are not feasible.

The CCTV system must have a recording format that is acceptable to the police with images of evidential quality. Staff should be sufficiently trained to operate the system and be able to make recordings available to police on request and an operational requirement must take account of this fact

Whilst the location of cameras is a site-specific matter it would be normal practice for the system to observe all vehicular and pedestrian entrances. Early discussions with an independent expert and potential installers can resolve a number of matters including:

- monitoring and recording requirements
- activation in association with the intruder alarm
- requirements for observation and facial recognition/identification
- areas to be monitored and field of view
- activities to be monitored
- the use of recorded images
- maintenance of equipment and the management of recording
- subsequent ongoing training of operatives

CCTV systems must be installed to BS EN 62676: Video surveillance systems for use in security applications.

Roller Shutter

Grilles and shutters can provide additional protection to both internal and external doors and windows. The minimum standard for such products is certification to:

- LPS 1175 Issue 7 Security Rating 1, or
- LPS 1175 Issue 8 Security Rating A1, or
- STS 202 Burglary Resistance 1

For roller shutters, the above minimum security ratings are generally sufficient where:

- a shutter is required to prevent minor criminal damage and glass breakage
- the shutter is alarmed and the building is located within a secure development with access control and security patrols
- the shutter or grille is intended to prevent access into a recess
- the door or window to be protected is of a high security standard in it’s own right

Intruder Alarm

A suitably designed, fit for purpose, monitored intruder alarm system must be installed. For police response, the system must comply with the requirements of the NPCC Security Systems policy.