Carrier

INSTALLATION, OPERATION AND MAINTENANCE INSTRUCTIONS

Air-Cooled Liquid Chillers
Reversible heat pumps

30RB/30RBP 170R-950R

Nominal cooling capacity 170-940 kW

30RQ/30RQP 165R-1040R

Heating capacity 180-1075 kW
Cooling capacity 160-1000 kW

R-32

AQUASNAP

greenspeed AQUASNAP

* The availability of sizes and options depends on the country. Please contact your local commercial dealer for more information.

Translation of the original document

CONTENTS

1 - INTRODUCTION AND SAFETY INSTRUCTIONS 4

2 - RECEIPT OF GOODS 5
2.1 - Checking the equipment received 5

3 - HANDLING AND POSITIONING 6
3.1 - Handling 6
3.2 - Positioning 6

4 - DIMENSIONS, CLEARANCES, MINIMUM INSTALLATION DISTANCES 8
4.1 - 30RB/30RBP and 30RQ/30RQP dimensions without buffer tank module (option 307) 8
4.2 - 30RB/30RBP and 30RQ/30RQP dimensions with buffer tank module (option 307) 10
4.3 - Free spaces 11
4.4 - Positioning of potentially flammable zones around the unit 11
4.5 - Installing several units 11
4.6 - Distance to the wall 11

5 - PHYSICAL AND ELECTRICAL DATA FOR THE UNITS 12
5.1 - Physical data 30RB 170R-380R 12
5.2 - Physical data 30RB 410R-950R 13
5.3 - Physical data 30RBP 170R to 950R 14
5.4 - Physical data 30RQ 165R-520R 16
5.5 - Physical data 30RQP 165R-520R 17
5.6 - Physical data 30RQP 570R-1040R 18
5.7 - Electrical data 30RB 170R-950R 19
5.8 - Electrical data 30RBP 170R-950R 20
5.9 - Electrical data 30RQ 165R-520R 21
5.10 - Electrical data 30RQP 165R-1040R 21
5.11 - Short circuit withstand current 22
5.12 - Electrical data for the hydraulic module 24
5.13 - Electrical data notes for the compressors 30
5.14 - Distribution of compressors per circuit 30
5.15 - Comments on electrical data notes 31

6 - ELECTRICAL CONNECTION 32
6.1 - Power supply 32
6.2 - Voltage phase imbalance (%) 32
6.3 - Power connection/disconnect switch 32
6.4 - Recommended cable sections 32
6.5 - Power cable access routing 34
6.6 - Field-installed control wiring 34
6.7 - Electric power reserve for the user 34

7 - APPLICATION DATA 35
7.1 - Operating range 35
7.2 - Minimum energy transfer fluid flow rate (units without factory-fitted hydraulic module) 37
7.3 - Maximum energy transfer fluid flow rate (units without factory-fitted hydraulic module) 37
7.4 - Variable flow water type heat exchanger (units without factory-fitted hydraulic module) 37
7.5 - Minimum system water volume 37
7.6 - Maximum system water volume 37
7.7 - Water type heat exchanger water flow rate 38
7.8 - Pressure drop curves for the water type heat exchanger and standard water inlet/outlet piping 39

8 - WATER CONNECTIONS 41
8.1 - Operating precautions and recommendations 41
8.2 - Hydraulic connections 42
8.3 - Hydraulic connections for 30RQP 620R-1040R units 44
8.4 - Flow rate detection 46
8.5 - Cavitation protection (with hydraulic module option) 46
8.6 - Additional electrical heaters 46
8.7 - Frost protection 47

9 - NOMINAL SYSTEM WATER FLOW RATE CONTROL 48
9.1 - Units without hydraulic module 48
9.2 - Units with hydraulic module and fixed-speed pump 48
9.3 - Units with hydraulic module and variable-speed pump – Pressure differential control 49
9.4 - Units with hydraulic module and variable-speed pump – Temperature differential control 50
9.5 - Units with hydraulic module and variable-speed pump - Setting a fixed flow rate for the system 50
9.6 - Available static system pressure 51

CONTENTS

10 - SYSTEM START-UP 57
10.1 - Checks before system start-up 57
10.2 - Commissioning 57
10.3 - Essential points to check 58

11 - MAIN COMPONENTS OF THE UNIT AND OPERATING CHARACTERISTICS 59
11.1 - Compressors 59
11.2 - Lubricant 59
11.3 - Air-cooled exchanger 59
11.4 - Fans 60
11.5 - Electronic expansion valve (EXV) 61
11.6 - Moisture indicator 61
11.7 - Dehumidifier filter 61
11.8 - Refrigerant accumulator with built-in filter drier 61
11.9 - Water type heat exchanger 61
11.10 - Refrigerant 61
11.11 - High-pressure safety pressostat 61
11.12 - Variable frequency drive 61
11.13 - Fan arrangement 62
11.14 - Fan stages 64
11.15 - Variable speed ventilation (30RBP/30RQP units) 65
11.16 - SmartVu™ control 65

12 - OPTIONS 66
12.1 - Tables of options 66
12.2 - Description 69

13 - STANDARD MAINTENANCE 100
13.1 - Level 1 maintenance 100
13.2 - Level 2 maintenance 100
13.3 - Level 3 maintenance 101
13.4 - Tightening the electrical connections 101
13.5 - Tightening torques for the main fastenings 102
13.6 - Air-cooled exchanger 102
13.7 - Water type heat exchanger 102
13.8 - Variable frequency drive 102
13.9 - Refrigerant volume 103
13.10 - Refrigerant properties 103

14 - FINAL SHUT-DOWN 104
14.1 - Shutting down 104
14.2 - Recommendations for disassembly 104
14.3 - Fluids to be recovered for treatment 104
14.4 - Materials to be recovered for recycling 104
14.5 - Waste Electrical and Electronic Equipment (WEEE) 104

15 - UNIT START-UP CHECKLIST FOR INSTALLERS PRIOR TO CONTACTING THE MANUFACTURER 105

This manual applies to the following units:

- 30RB standard chiller, R32 refrigerant (A2L fluid)
- 30RBP chiller with variable-speed pumps and fans, R32 refrigerant (A2L fluid)
- 30RQ standard reversible heat pump, R32 refrigerant (A2L fluid)
- 30RQP reversible heat pump with variable-speed pumps and fans, R32 refrigerant (A2L fluid)

For operation of the control, please refer to the 30RB/30RBP/30RQ/30RQP control manual.

The illustrations in this document are for illustrative purposes only and not part of any offer for sale or contract. The manufacturer reserves the right to change the design at any time without notice.

1 - INTRODUCTION AND SAFETY INSTRUCTIONS

The units are designed to cool water (for coolers) and cool or reheat water (for reversible heat pumps) for the air conditioning and heating of buildings and industrial processes.

They are designed to provide a very high level of safety and reliability, making installation, start-up, operation and maintenance easier and safer.

They will provide safe and reliable service if used within their application ranges.

For all safety instructions, please refer to the safety manual. A paper version is delivered with the machine, the digital version is available in the same place as the IOM, (contact your local distributor).

In addition to this safety manual, the manufacturer states that the unit is designed for a maximum number of 120,000 start-ups.

This product contains fluorinated greenhouse gases governed by the Kyoto protocol (1997) and covered by European regulation 517/2014 on fluorinated greenhouse gases (Annex I):

- Refrigerant type: R32
- Global Warming Potential (GWP): 675 (as per AR4)

2 - RECEIPT OF GOODS

2.1 - Checking the equipment received

Check that the unit and the accessories have not been damaged during transport and that no parts are missing. If the unit and the accessories have been damaged or the shipment is incomplete, send a claim to the shipping company.

Compare the name plate data with the order.

The name plate is attached in two places to the unit:

- On one side of the unit exterior,
- On the inside of the electrical panel door.

3 - HANDLING AND POSITIONING

3.1 - Handling

Carrier strongly recommends employing a specialised company to unload the machine.

Do not remove the subbase or the packaging until the unit is in its final position.

These units can be safely moved by trained personnel with a fork lift truck with the correct capacity for the dimensions and weight of the unit, as long as the forks are positioned in the location and direction shown on the unit.

The units can also be lifted with slings, using only the designated lifting points marked on the unit (labels on the chassis and a label with all unit handling instructions, attached to the unit).

Use slings with the correct capacity, and follow the lifting instructions on the certified dimensional drawings supplied.

IMPORTANT: Only attach slings to the designated lifting points which are marked on the unit.

It is advisable to protect coils against crushing while a unit is being moved. Use struts or a lifting beam to spread the slings above the unit. Do not tilt the unit more than 15°.

Safety when lifting can only be guaranteed if all these instructions are followed. Otherwise, there is a risk of equipment damage or injury to personnel.

3.2 - Positioning

The machine must be installed in a place that is not accessible to the public and is protected against access by non-authorised persons.

The machine is designed to be installed outdoors. Moe more details on the various installation scenarios, refer to the installation guide for A2L refrigerants.

For extra-high units, the unit environment must permit easy access for maintenance operations.

For the centre of gravity coordinates, the position of the unit mounting holes, and the weight distribution points, refer to the certified dimensional drawings. Ensure the free space shown in the dimensional drawings is respected to facilitate maintenance and connection.

The typical applications of these units are cooling and heating, which do not require earthquake resistance. Earthquake resistance has not been verified.

Before positioning the device, check that:

- The chosen location can support the weight of the unit, or that the appropriate reinforcement measures have been taken.
- The unit is installed level on an even surface (maximum tolerance is 5 mm along both axes).
- If the support structure is sensitive to vibration and/or noise transmission it is advisable to insert anti-vibration mounts (elastomer mounts or metal springs) between the unit and the structure. Selection of these devices is based on the system characteristics and the comfort level required and should be made by technical specialists.
- There is adequate space above and around the unit for air to circulate and for access to the components (see dimensional drawings).
- The number of support points is adequate and that they are in the right places.
- The location is not subject to flooding.
- Avoid installing the unit where snow is likely to accumulate (in areas subject to long periods of sub-zero temperatures, the unit should be raised).
- The unit must be installed on a plinth designed to collect then drain the water produced by the reversible units during the defrost cycles
- The wind may affect the operation and performance of machines. Baffles may be necessary to deflect strong winds. These must not restrict the unit's air flow.

IMPORTANT: Before lifting the unit, check that all enclosure panels and grilles are securely fixed in place. Lift and set down the unit with great care. Tilting and jarring can damage the unit and impair unit operation.

Never apply pressure or leverage to any of the unit's panels or uprights; only the base of the unit frame is designed to withstand such stresses. No force or effort must be applied to pressurised parts, especially via pipes connected to the water type heat exchanger (with or without the hydraulic module if the unit is equipped with this). The hydraulic module pipes must be fitted so that the pump does not support the weight of the pipes.

All welding operations (connection to the hydraulic network) must be performed by qualified welders. The Victaulic® connection or the counter-flange must be removed before welding as a matter of course.

Specific data 30RQ/30RQP

In some cases, uprights are added for transporting and handling the unit. The uprights must be removed if necessary for access or connection.

Important: Follow the disassembly procedure indicated in the disassembly instructions.

- Undo the bolt (3).
- Remove the upright (2).
- Remove the plate (1).

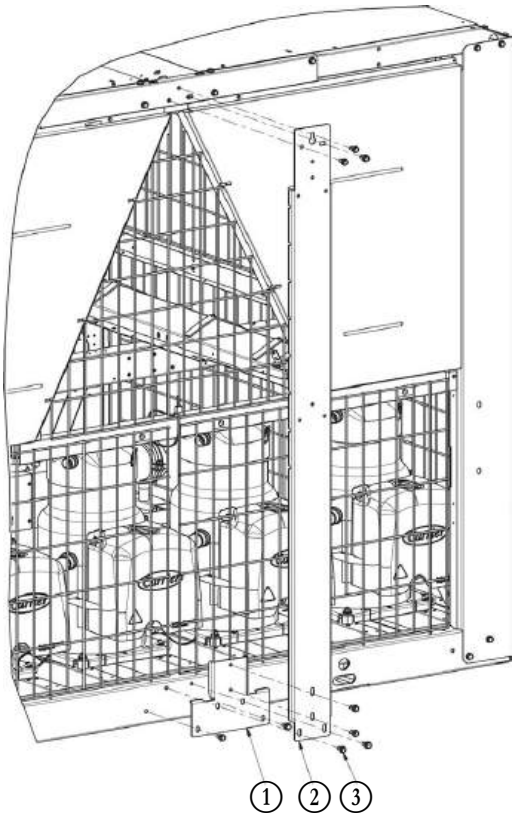

Keep the uprights following start-up and refit them when moving the unit.

4 - DIMENSIONS, CLEARANCES, MINIMUM INSTALLATION DISTANCES

4.1 - 30RB/30RBP and 30RQ/30RQP dimensions without buffer tank module (option 307)

30RB/30RBP and 30RQ/30RQP 165R to 680R

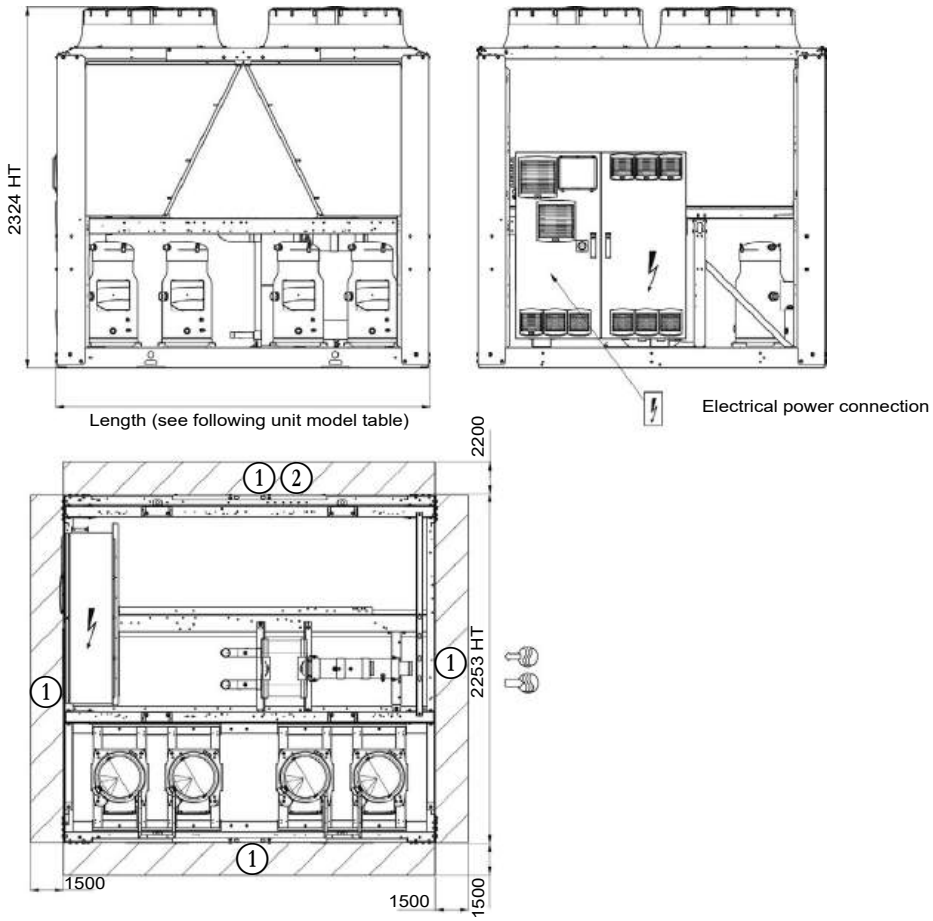

Unit model					
30RB/30RBP	170R to 270R	310R to 410R	450R to 550R	610R to 720R	770R to 950R
30RQ/30RQP	165R to 270R	310R to 400R	430R to 520R	570R	610 to 680R
Length (mm)	2410	3604	4797	5992	7185

Key:
All dimensions are given in mm.

1. Clearances required for maintenance and air flow
2. Clearance recommended for coil removal

Water inlet

Water outlet

Air outlet, do not obstruct

Control box

NOTE: Non-contractual drawings.

When designing a system, refer to the certified dimensional drawings provided with the unit or available on request.

Refer to the nameplate for the machine weight.

Refer to the certified dimensional drawings for the location of fixing points, weight distribution and coordinates of the centre of gravity, hydraulic and electrical connections.

30RQP 740R to 1040R

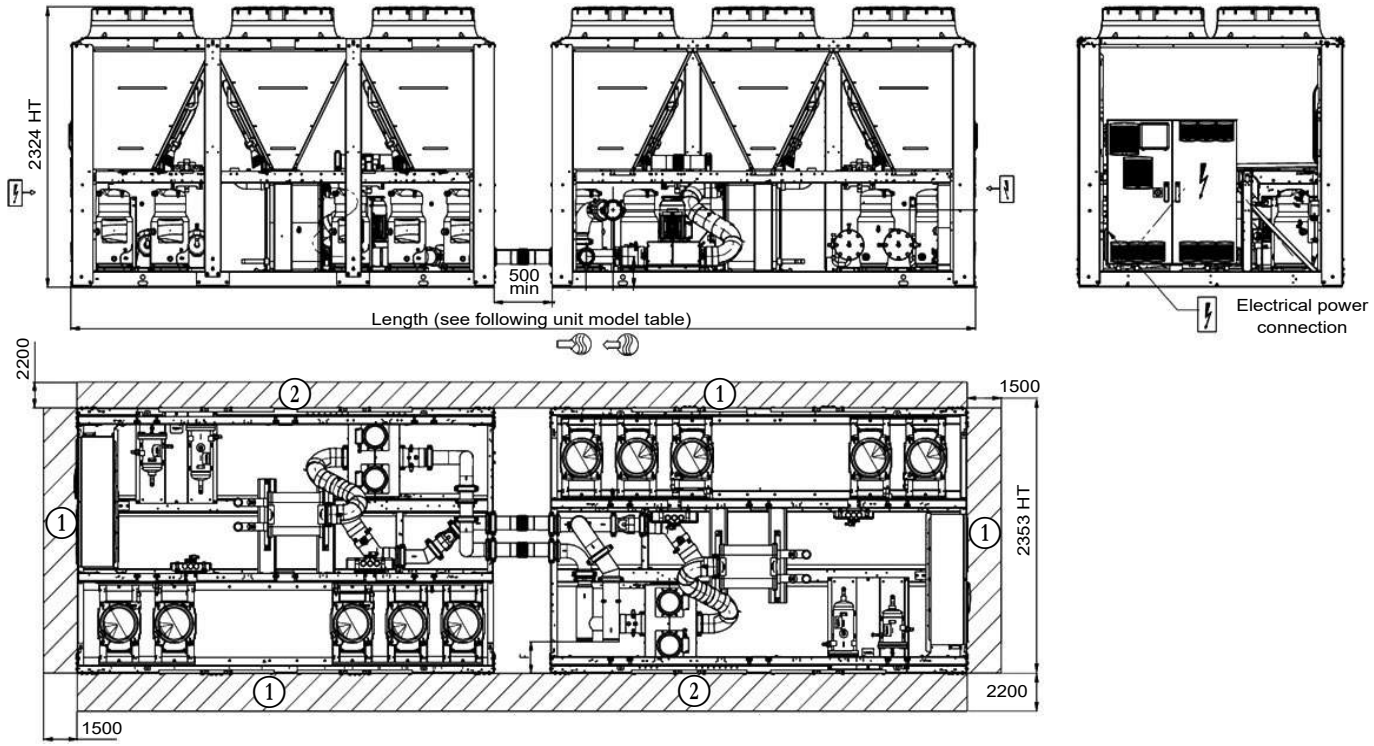

Unit model		
30RQ/30RQP	740R to 800R	860R to 1040R
Length (mm)	7708	10096

Key:
All dimensions are given in mm.

- ① Clearances required for maintenance and air flow
- ② Clearance recommended for coil removal
- Water inlet
- Water outlet
- Air outlet, do not obstruct
- Control box

NOTE: Non-contractual drawings.

When designing a system, refer to the certified dimensional drawings provided with the unit or available on request.

Refer to the nameplate for the machine weight.

Refer to the certified dimensional drawings for the location of fixing points, weight distribution and coordinates of the centre of gravity, hydraulic and electrical connections.

4.2 - 30RB/30RBP and 30RQ/30RQP dimensions with buffer tank module (option 307)

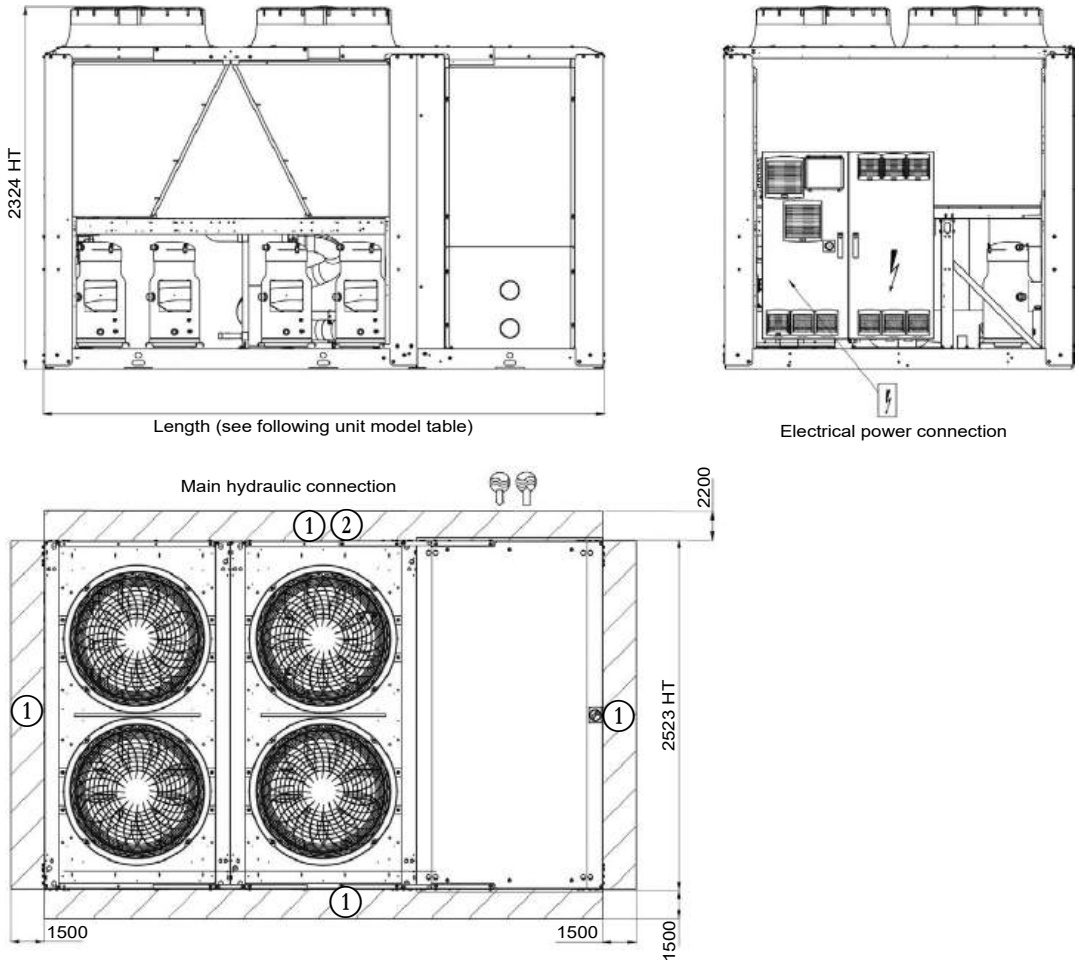

Unit model					
30RB/30RBP	170R to 270R	310R to 410R	450R to 550R	610R to 720R	770R to 950R
30RQ/30RQP	165R to 270R	310R to 400R	430R to 520R	570R	610R to 680R
Length (mm)	3604	4798	5992	7186	8379

Key:
All dimensions are given in mm.

1. Clearances required for maintenance and air flow
2. Clearance recommended for coil removal

Water inlet

Water outlet

Air outlet, do not obstruct

Control box

NOTE: Non-contractual drawings.

When designing a system, refer to the certified dimensional drawings provided with the unit or available on request.

Refer to the nameplate for the machine weight.

Refer to the certified dimensional drawings for the location of fixing points, weight distribution and coordinates of the centre of gravity, hydraulic and electrical connections.

4.3 - Free spaces

The free spaces presented are determined in order to ensure sufficient working and manoeuvring space to carry out maintenance operations on the unit in suitable ergonomic conditions

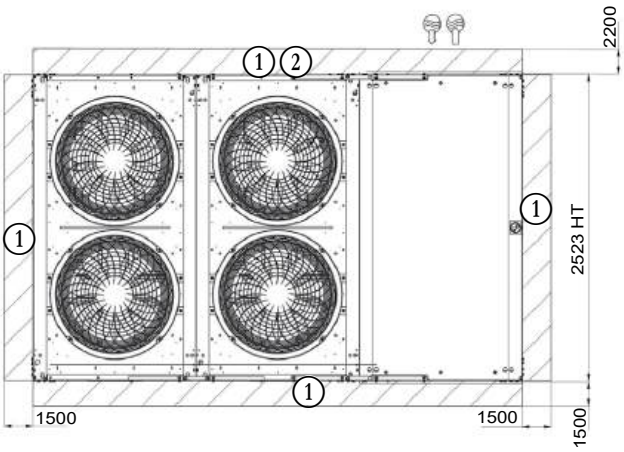

Key:
All dimensions are given in mm.

1 Clearances required for maintenance and air flow

2 Clearance recommended for coil removal

4.4 - Positioning of potentially flammable zones around the unit

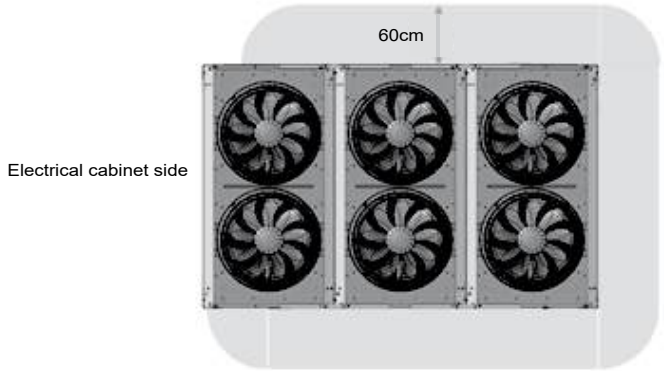

The complete unit, including all the options and accessories which are provided by the manufacturer, have been certified for use with an A2L refrigerant.

To ensure this, the manufacturer complies with EN 378-2 §6.2.14 and has defined a potentially flammable zone using EN 60079-10-1 in order to identify where no sources of ignition must be present.

The manufacturer has then designed the machine so that, if the unit is used in the manner for which it has been designed, there are no internal sources of ignition in the potentially flammable zone inside the machine.

Therefore, the only residual risk is that a source of ignition is introduced into the potentially flammable zone by the user. This is why the manufacturer has decided to show the potentially flammable zone around the machine (see the diagram above) into which the user must not introduce any sources of ignition.

This indication is only provided to help our customers to identify the limits of the flammability risk.

However, the machine itself does not present any risk of explosion connected to the use of A2L refrigerant.

Note (the following information is provided by the manufacturer for guidance only. The application of the following directives is the sole responsibility of the user):

In compliance with the directives 2009/104/EC and 1999/92/EC, these zones may be qualified as ATEX zones by the user on the basis of their own risk analysis, for which they alone remain responsible. In accordance with the definition given by Annex I of the directive 1999/92/EC, this zone may be classified as zone 2 since it may consist of a location where an explosive atmosphere consisting of a mixture of air and flammable substances in the form of a gas is not liable to occur during normal operation or, if it does occur, it only occurs for a short period of time.

If additional equipment is required (motorised valve, pump, etc.), it must be:

- Installed outside of the defined potentially flammable zone
- Certified as not being a source of ignition for the refrigerant used.

4.5 - Installing several units

It is recommended to install multiple units in a single row, arranged as shown in the example below, to avoid recycling air between the units. If the floor space does not allow this arrangement, contact your distributor to assess the various installation options.

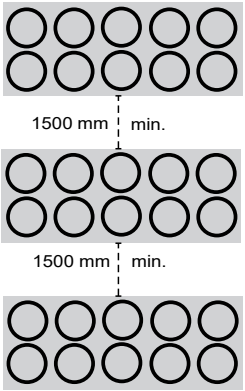

4.6 - Distance to the wall

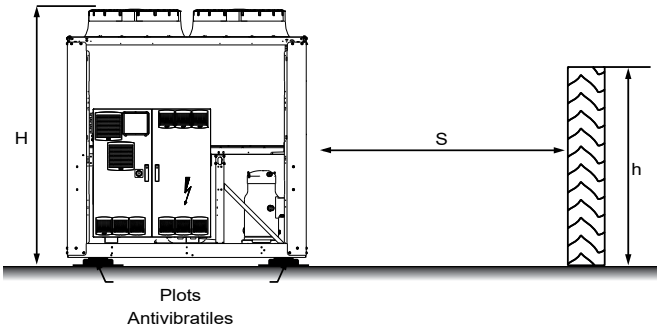

To guarantee correct operation in most cases:

If h < H, S minimum = 3 m

If h > H or S < 3 m, contact your distributor to assess the various installation options.

5 - PHYSICAL AND ELECTRICAL DATA FOR THE UNITS

5.1 - Physical data 30RB 170R-380R

30RB		170R	190R	210R	230R	270R	310R	340R	380R
Sound levels									
Standard unit									
Sound power(1)	dB(A)	91,0	91,5	91,5	92,0	92,0	93,0	93,0	93,5
Sound pressure at 10 m(2)	dB(A)	58,5	59,5	59,5	60,0	60,0	60,5	60,5	61,0
Unit + option 15LS(3)									
Sound power(1)	dB(A)	85,5	85,5	85,5	86,5	86,0	87,5	87,0	88,0
Sound pressure at 10 m(2)	dB(A)	53,0	53,5	53,5	54,5	54,5	55,5	55,5	55,5
Unit + option 15LS+(3)									
Sound power(1)	dB(A)	83,5	83,5	83,5	84,5	84,5	85,5	85,5	86,0
Sound pressure at 10 m(2)	dB(A)	51,5	51,5	51,5	52,5	52,5	53,5	53,5	53,5
Dimensions - standard unit									
Standard unit									
Length	mm	2410	2410	2410	2410	2410	3604	3604	3604
Width	mm	2253	2253	2253	2253	2253	2253	2253	2253
Height	mm	2324	2324	2324	2324	2324	2324	2324	2324
Unit + option 307(3)									
Length	mm	3604	3604	3604	3604	3604	4798	4798	4798
Operating weight(4)									
Standard unit	kg	1349	1397	1397	1521	1556	1995	2049	2211
Unit + option 15LS/15LS+(3)	kg	1432	1480	1480	1630	1665	2122	2176	2356
Unit + option 15LS/15LS+ + option 116W(3)	kg	1567	1615	1615	1765	1811	2271	2371	2551
Unit + option 15LS/15LS+ + option 116W + option 307(3)	kg	2550	2598	2598	2748	2794	3258	3357	3537
Compressors		Hermetic Scroll 48,3 r/s							
Circuit A		1	1	1	2	2	2	2	3
Circuit B		2	2	2	2	2	3	3	3
Number of power stages		3	3	3	4	4	5	5	6
Unit PED category		III	III	III	III	III	III	III	III
Refrigerant(4)		R32 / A2L /GWP= 675 as per AR4							
Circuit A	kg	6,3	9,4	9,4	11,1	11,5	12,2	13,0	17,7
	tCO_2e	4,2	6,3	6,3	7,5	7,8	8,2	8,8	11,9
Circuit B	kg	11,1	11,1	11,1	11,1	11,5	17,1	17,9	18,5
	tCO_2e	7,5	7,5	7,5	7,5	7,8	11,5	12,0	12,5
Oil									
Circuit A	l	6,60	6,60	6,60	13,20	13,20	13,20	13,20	19,80
Circuit B	l	13,20	13,20	13,20	13,20	13,20	19,80	19,80	19,80
Capacity control		SmartVu™							
Minimum capacity	%	33	33	33	25	25	20	20	17
Condenser		All-aluminium micro-channel coils (MCHE)							
Fans		Axial Flying Bird 6 with rotating shroud							
Standard unit									
Quantity		3	4	4	4	4	5	5	6
Maximum total air flow	l/s	14460	19280	19280	19280	19280	24100	24100	28920
Maximum rotation speed	r/s	16	16	16	16	16	16	16	16
Evaporator		Direct expansion brazed-plate heat exchanger							
Water volume	l	15	15	15	19	27	27	35	44
Max. water-side operating pressure without hydraulic module	kPa	1000	1000	1000	1000	1000	1000	1000	1000
Hydraulic module (option)		Pump, Victaulic screen filter, relief valve, water and air vent valve, pressure sensors							
Pump		Centrifugal pump, monocell, 48,3 r/s, low- or high pressure (as required), single or dual (as required)							
Expansion tank volume (Option)	l	50	50	50	50	50	80	80	80
Buffer tank volume (option)	l	550	550	550	550	550	550	550	550
Max. water-side operating pressure with hydraulic module	kPa	400	400	400	400	400	400	400	400
Water connections with or without hydraulic module		Victaulic® type							
Connections	inches	3	3	3	3	3	4	4	4
External diameter	mm	88,9	88,9	88,9	88,9	88,9	114,3	114,3	114,3
Casing paint colour		Colour code RAL 7035							

(1) In dB ref=10^{-12} W, (A) weighting. Declared dual-number noise emission value in accordance with ISO 4871 with an uncertainty of +/-3 dB(A). Measured in accordance with ISO 9614-1 and certified by Eurovent.
(2) In dB ref 20 µPa, (A) weighting. Declared dual-number noise emission value in accordance with ISO 4871 with an uncertainty of +/-3 dB(A). For information, calculated from the sound power Lw(A).
(3) Options: 15LS = Very low noise level, 15LS+= Ultra Low Noise, 116W = Variable-speed high pressure dual-pump hydraulic module, 307 = Water buffer tank module,
(4) Values are guidelines only. Refer to the unit name plate.

5.2 - Physical data 30RB 410R-950R

30RB		410R	450R	480R	550R	610R	670R	720R	770R	800R	870R	950R
Sound levels												
Standard unit												
Sound power(1)	dB(A)	93,5	94,0	94,0	94,5	97,5	97,5	98,0	98,0	98,5	98,5	99,0
Sound pressure at 10 m(2)	dB(A)	61,5	61,5	61,5	62,0	65,0	65,0	66,0	65,0	66,0	66,0	66,5
Unit + option 15LS(3)												
Sound power(1)	dB(A)	88,0	88,5	88,5	89,0	92,5	92,5	93,0	93,0	93,5	93,5	94,5
Sound pressure at 10 m(2)	dB(A)	56,0	56,0	56,5	57,0	60,5	60,0	60,5	60,0	61,0	60,5	61,5
Unit + option 15LS+(3)												
Sound power(1)	dB(A)	86,0	86,5	86,5	87,0	90,0	90,0	90,5	90,5	90,5	90,5	91,0
Sound pressure at 10 m(2)	dB(A)	53,5	54,5	54,0	55,0	57,5	57,5	58,0	58,0	57,5	58,0	58,5
Dimensions - standard unit												
Standard unit												
Length	mm	3604	4798	4798	4798	5992	5992	5992	7186	7186	7186	7186
Width	mm	2253	2253	2253	2253	2253	2253	2253	2253	2253	2253	2253
Height	mm	2324	2324	2324	2324	2324	2324	2324	2324	2324	2324	2324
Unit + option 307(3)												
Length	mm	4798	5992	5992	5992	7186	7186	7186	8380	8380	8380	8380
Operating weight(4)												
Standard unit	kg	2269	2697	2722	2927	3265	3511	3511	4042	4042	4291	4291
Unit + option 15LS/15LS+(3)	kg	2414	2860	2885	3108	3398	3664	3664	4216	4216	4485	4485
Unit + option 15LS/15LS+ + option 116W(3)	kg	2609	3094	3119	3379	3708	3974	3974	4605	4605	4874	4874
Unit + option 15LS/15LS+ + option 116W + option 307(3)	kg	3594	4086	4111	4371	4715	4981	4981	5626	5626	5895	5895
Compressors		Hermetic Scroll 48,3 r/s										
Circuit A		3	3	3	4	2	3	3	3	3	4	4
Circuit B		3	4	4	4	3	3	3	4	4	4	4
Number of power stages		6	7	7	8	5	6	6	7	7	8	8
Unit PED category		III	IV	IV	IV	III	III	III	IV	IV	IV	IV
Refrigerant(4)		R32 / A2L /GWP= 675 as per AR4										
Circuit A	kg	18,5	18,8	19,1	24,4	23,0	24,5	24,5	27,3	27,3	30,4	30,4
	tCO_2e	12,5	12,7	12,9	16,5	15,5	16,5	16,5	18,4	18,4	20,5	20,5
Circuit B	kg	19,3	24,5	24,9	25,4	24,5	24,5	24,5	30,4	30,4	30,4	30,4
	tCO_2e	13,0	16,5	16,8	17,1	16,5	16,5	16,5	20,5	20,5	20,5	20,5
Oil												
Circuit A	l	19,8	19,8	19,8	26,4	13,2	19,8	19,8	19,8	19,8	26,4	26,4
Circuit B	l	19,8	26,4	26,4	26,4	19,8	19,8	19,8	26,4	26,4	26,4	26,4
Capacity control		SmartVu™										
Minimum capacity	%	17	14	14	13	20	17	17	14	14	13	13
Condenser		All-aluminium micro-channel coils (MCHE)										
Fans		Axial Flying Bird 6 with rotating shroud										
Standard unit												
Quantity		6	7	7	8	9	10	10	11	11	12	12
Maximum total air flow	l/s	28920	33740	33740	38560	43380	48200	48200	53020	53020	57840	57840
Maximum rotation speed	r/s	16	16	16	16	16	16	16	16	16	16	16
Evaporator		Direct expansion brazed-plate heat exchanger										
Water volume	l	44	44	47	53	73	73	73	84	84	84	84
Max. water-side operating pressure without hydraulic module	kPa	1000	1000	1000	1000	1000	1000	1000	1000	1000	1000	1000
Hydraulic module (option)		Pump, Victaulic screen filter, relief valve, water and air vent valve, pressure sensors										
Pump		Centrifugal pump, monocell, 48,3 r/s, low- or high pressure (as required), single or dual (as required)										
Expansion tank volume (Option)	l	80	80	80	80	80	80	80	80	80	80	80
Buffer tank volume (option)	l	550	550	550	550	550	550	550	550	550	550	550
Max. water-side operating pressure with hydraulic module	kPa	400	400	400	400	400	400	400	400	400	400	400
Water connections with or without hydraulic module		Victaulic® type										
Connections	inches	4	4	4	4	5	5	5	5	5	5	5
External diameter	mm	114,3	114,3	114,3	114,3	139,7	139,7	139,7	139,7	139,7	139,7	139,7
Casing paint colour		Colour code RAL 7035										

(1) In dB ref=10^{-12} W, (A) weighting. Declared dual-number noise emission value in accordance with ISO 4871 with an uncertainty of +/-3 dB(A). Measured in accordance with ISO 9614-1 and certified by Eurovent.
(2) In dB ref 20 µPa, (A) weighting. Declared dual-number noise emission value in accordance with ISO 4871 with an uncertainty of +/-3 dB(A). For information, calculated from the sound power Lw(A).
(3) Options: 15LS = Very low noise level, 15LS+= Ultra Low Noise, 116W = Variable-speed high pressure dual-pump hydraulic module, 307 = Water buffer tank module,
(4) Values are guidelines only. Refer to the unit name plate.

5.3 - Physical data 30RBP 170R to 950R

30RBP		170R	190R	210R	230R	270R	310R	340R	380R	410R
Sound levels										
Standard unit										
Sound power(1)	dB(A)	91,0	90,5	90,5	92,0	92,0	93,0	93,0	93,5	93,5
Sound pressure at 10 m(2)	dB(A)	58,5	58,5	58,5	60,0	60,0	60,5	60,5	61,0	61,5
Unit + option 15LS(3)										
Sound power(1)	dB(A)	85,5	85,5	85,5	86,5	86,5	87,5	87,5	88,0	88,0
Sound pressure at 10 m(2)	dB(A)	53,0	53,5	53,5	54,5	54,5	55,5	55,5	55,5	56,0
Unit + option 15LS+(3)										
Sound power(1)	dB(A)	83,5	83,5	83,5	84,5	84,5	85,5	85,5	86,0	88,0
Sound pressure at 10 m(2)	dB(A)	51,5	51,5	51,5	52,5	52,5	53,5	53,5	53,5	56,0
Dimensions - standard unit										
Standard unit										
Length	mm	2410	2410	2410	2410	2410	3604	3604	3604	3604
Width	mm	2253	2253	2253	2253	2253	2253	2253	2253	2253
Height	mm	2324	2324	2324	2324	2324	2324	2324	2324	2324
Unit + option 307(3)										
Length	mm	3604	3604	3604	3604	3604	4798	4798	4798	4798
Operating weight(4)										
Standard unit	kg	1349	1397	1397	1521	1556	1995	2049	2211	2269
Unit + option 15LS/15LS+(3)	kg	1432	1480	1480	1630	1665	2122	2176	2356	2414
Unit + option 15LS/15LS+ + option 116W(3)	kg	1567	1615	1615	1765	1811	2271	2371	2551	2609
Unit + option 15LS/15LS+ + option 116W + option 307(3)	kg	2550	2598	2598	2748	2794	3258	3357	3537	3594
Compressors		Hermetic Scroll 48,3 r/s								
Circuit A		1	1	1	2	2	2	2	3	3
Circuit B		2	2	2	2	2	3	3	3	3
Number of power stages		3	3	3	4	4	5	5	6	6
Unit PED category		III	III	III	III	III	III	III	III	III
Refrigerant(4)		R32 / A2L /GWP= 675 as per AR4								
Circuit A	kg	6,3	9,4	9,4	11,1	11,5	12,2	13,0	17,7	18,5
	tCO_2e	4,2	6,3	6,3	7,5	7,8	8,2	8,8	11,9	12,5
Circuit B	kg	11,1	11,1	11,1	11,1	11,5	17,1	17,9	18,5	19,3
	tCO_2e	7,5	7,5	7,5	7,5	7,8	11,5	12,0	12,5	13,0
Oil										
Circuit A	l	6,6	6,6	6,6	13,2	13,2	13,2	13,2	19,8	19,8
Circuit B	l	13,2	13,2	13,2	13,2	13,2	19,8	19,8	19,8	19,8
Capacity control		SmartVu™								
Minimum capacity	%	33	33	33	25	25	20	20	17	17
Condenser		All-aluminium micro-channel coils (MCHE)								
Fans		Axial Flying Bird 6 with rotating shroud								
Standard unit										
Quantity		3	3	4	4	4	5	5	6	6
Maximum total air flow	l/s	14460	19280	19280	19280	19280	24100	24100	28920	28920
Maximum rotation speed	r/s	16	16	16	16	16	16	16	16	16
Evaporator		Direct expansion brazed-plate heat exchanger								
Water volume	l	15	15	15	19	27	27	35	44	44
Max. water-side operating pressure without hydraulic module	kPa	1000	1000	1000	1000	1000	1000	1000	1000	1000
Hydronic module (option)		Pump, Victaulic screen filter, relief valve, water and air vent valve, pressure sensors								
Pump		Centrifugal pump, monocell, 48,3 r/s, low- or high pressure (as required), single or dual (as required)								
Expansion tank volume (Option)	l	50	50	50	50	50	80	80	80	80
Buffer tank volume (option)	l	550	550	550	550	550	550	550	550	550
Max. water-side operating pressure with hydraulic module	kPa	400	400	400	400	400	400	400	400	400
Water connections with or without hydraulic module		Victaulic® type								
Connections	inches	3	3	3	3	3	4	4	4	4
External diameter	mm	88,9	88,9	88,9	88,9	88,9	114,3	114,3	114,3	114,3
Casing paint colour		Colour code RAL 7035								

(1) In dB ref=10^{-12} W, (A) weighting. Declared dual-number noise emission value in accordance with ISO 4871 with an uncertainty of +/-3 dB(A). Measured in accordance with ISO 9614-1 and certified by Eurovent.
(2) In dB ref 20 µPa, (A) weighting. Declared dual-number noise emission value in accordance with ISO 4871 with an uncertainty of +/-3 dB(A). For information, calculated from the sound power Lw(A).
(3) Options: 15LS = Very low noise level, 15LS+= Ultra Low Noise, 116W = Variable-speed high pressure dual-pump hydraulic module, 307 = Water buffer tank module,
(4) Values are guidelines only. Refer to the unit name plate.

5 - PHYSICAL AND ELECTRICAL DATA FOR THE UNITS

30RBP		450R	480R	550R	610R	670R	720R	770R	800R	870R	950R
Sound levels											
Standard unit											
Sound power(1)	dB(A)	94,0	94,0	94,5	97,5	97,5	98,0	98,0	98,5	98,5	99,0
Sound pressure at 10 m(2)	dB(A)	61,5	61,5	62,0	65,0	65,0	66,0	65,0	66,0	66,0	66,5
Unit + option 15LS(3)											
Sound power(1)	dB(A)	88,5	88,5	89,0	92,5	92,5	93,0	93,0	93,5	93,5	94,5
Sound pressure at 10 m(2)	dB(A)	56,0	56,5	57,0	60,5	60,0	60,5	60,0	61,0	60,5	61,5
Unit + option 15LS+(3)											
Sound power(1)	dB(A)	88,5	88,5	89,0	92,5	92,5	93,0	93,0	93,5	93,5	94,5
Sound pressure at 10 m(2)	dB(A)	56,0	56,5	57,0	60,5	60,0	60,5	60,0	61,0	60,5	61,5
Dimensions - standard unit											
Standard unit											
Length	mm	4798	4798	4798	5992	5992	5992	7186	7186	7186	7186
Width	mm	2253	2253	2253	2253	2253	2253	2253	2253	2253	2253
Height	mm	2324	2324	2324	2324	2324	2324	2324	2324	2324	2324
Unit + option 307(3)											
Length	mm	5992	5992	5992	7186	7186	7186	8380	8380	8380	8380
Operating weight(4)											
Standard unit	kg	2697	2722	2927	3265	3511	3511	4042	4042	4291	4291
Unit + option 15LS/15LS+(3)	kg	2860	2885	3108	3398	3664	3664	4216	4216	4485	4485
Unit + option 15LS/15LS+ + option 116W(3)	kg	3094	3119	3379	3708	3974	3974	4605	4605	4874	4874
Unit + option 15LS/15LS+ + option 116W + option 307(3)	kg	4086	4111	4371	4715	4981	4981	5626	5626	5895	5895
Compressors		Hermetic Scroll 48,3 r/s									
Circuit A		3	3	4	2	3	3	3	3	4	4
Circuit B		4	4	4	3	3	3	4	4	4	4
Number of power stages		7	7	8	5	6	6	7	7	8	8
PED category		IV	IV	IV	III	III	III	IV	IV	IV	IV
Refrigerant(4)		R32 / A2L /GWP= 675 as per AR4									
Circuit A	kg	18,8	19,1	24,4	23,0	24,5	24,5	27,3	27,3	30,4	30,4
	tCO_2e	12,7	12,9	16,5	15,5	16,5	16,5	18,4	18,4	20,5	20,5
Circuit B	kg	24,5	24,9	25,4	24,5	24,5	24,5	30,4	30,4	30,4	30,4
	tCO_2e	16,5	16,8	17,1	16,5	16,5	16,5	20,5	20,5	20,5	20,5
Oil											
Circuit A	l	19,8	19,8	26,4	13,2	19,8	19,8	19,8	19,8	26,4	26,4
Circuit B	l	26,4	26,4	26,4	19,8	19,8	19,8	26,4	26,4	26,4	26,4
Capacity control		SmartVu™									
Minimum capacity	%	14	14	13	20	17	17	14	14	13	13
Condenser		All-aluminium micro-channel coils (MCHE)									
Fans		Axial Flying Bird 6 with rotating shroud									
Standard unit											
Quantity		7	7	8	9	10	10	11	11	12	12
Maximum total air flow	l/s	33740	33740	38560	43380	48200	48200	53020	53020	57840	57840
Maximum rotation speed	r/s	16	16	16	16	16	16	16	16	16	16
Evaporator		Direct expansion brazed-plate heat exchanger									
Water volume	l	44	47	53	73	73	73	84	84	84	84
Max. water-side operating pressure without hydraulic module	kPa	1000	1000	1000	1000	1000	1000	1000	1000	1000	1000
Hydronic module (option)		Pump, Victaulic screen filter, relief valve, water and air vent valve, pressure sensors									
Pump		Centrifugal pump, monocell, 48,3 r/s, low- or high pressure (as required), single or dual (as required)									
Expansion tank volume (Option)	l	80	80	80	80	80	80	80	80	80	80
Buffer tank volume (option)	l	550	550	550	550	550	550	550	550	550	550
Max. water-side operating pressure with hydraulic module	kPa	400	400	400	400	400	400	400	400	400	400
Water connections with or without hydraulic module		Victaulic® type									
Connections	inches	4	4	4	5	5	5	5	5	5	5
External diameter	mm	114,3	114,3	114,3	139,7	139,7	139,7	139,7	139,7	139,7	139,7
Casing paint colour		Colour code RAL 7035									

(1) In dB ref=10^{-12} W, (A) weighting. Declared dual-number noise emission value in accordance with ISO 4871 with an uncertainty of +/-3 dB(A). Measured in accordance with ISO 9614-1 and certified by Eurovent.
(2) In dB ref 20 µPa, (A) weighting. Declared dual-number noise emission value in accordance with ISO 4871 with an uncertainty of +/-3 dB(A). For information, calculated from the sound power Lw(A).
(3) Options: 15LS = Very low noise level, 15LS+= Ultra Low Noise, 116W = Variable-speed high pressure dual-pump hydraulic module, 307 = Water buffer tank module,
(4) Values are guidelines only. Refer to the unit name plate.

5.4 - Physical data 30RQ 165R-520R

30RQ		165R	180R	210R	230R	270R	310R	330R	370R	400R	430R	470R	520R
Sound levels													
Standard unit													
Sound power(1)	dB(A)	90,5	91,0	91,5	92,0	92,0	93,0	93,5	94,0	94,0	94,5	94,5	95,0
Sound pressure at 10 m(2)	dB(A)	58,0	58,5	59,5	60,0	60,0	60,5	61,0	61,5	61,5	62,0	62,0	62,5
Dimensions - standard unit													
Standard unit													
Length	mm	2410	2410	2410	2410	2410	3604	3604	3604	3604	4798	4798	4798
Width	mm	2253	2253	2253	2253	2253	2253	2253	2253	2253	2253	2253	2253
Height	mm	2324	2324	2324	2324	2324	2324	2324	2324	2324	2324	2324	2324
Unit + option 307(3)													
Length	mm	3604	3604	3604	3604	3604	4798	4798	4798	4798	5992	5992	5992
Operating weight(4)													
Standard unit	kg	1569	1575	1784	1811	1817	2394	2452	2672	2678	3154	3180	3430
Unit + option 116W(3)	kg	1787	1793	2039	2067	2073	2715	2774	3051	3057	3551	3614	3882
Unit + option 116W + option 307(3)	kg	2771	2777	3022	3049	3055	3725	3783	4060	4066	4551	4614	4882
Compressors		Hermetic Scroll 48,3 r/s											
Circuit A/C		1	1	2	2	2	2	2	2	2	3	3	4
Circuit B/D		2	2	2	2	2	3	3	4	4	4	4	4
Number of power stages		3	3	4	4	4	5	5	6	6	7	7	8
Unit PED category		III	III	III	III	III	III	IV	IV	IV	IV	IV	IV
Refrigerant(4)		R32 / A2L /GWP= 675 as per AR4											
Circuit A/C	kg	10,50	10,50	16,00	16,00	16,00	16,00	18,00	18,00	18,00	29,00	29,00	35,00
	tCO_2e	7,1	7,1	10,8	10,8	10,8	10,8	12,2	12,2	12,2	19,6	19,6	23,6
Circuit B/D	kg	16,00	16,00	16,00	16,00	16,00	28,50	28,50	34,00	34,00	34,50	35,00	35,00
	tCO_2e	10,8	10,8	10,8	10,8	10,8	19,2	19,2	23,0	23,0	23,3	23,6	23,6
Oil													
Circuit A/C	l	6,6	6,6	13,2	13,2	13,2	13,2	13,2	13,2	13,2	22,8	22,8	30,4
Circuit B/D	l	13,2	13,2	13,2	13,2	13,2	22,8	22,8	30,4	30,4	30,4	30,4	30,4
Capacity control		SmartVu™											
Minimum capacity	%	33	33	25	25	25	20	20	17	17	14	14	13
Condenser		Grooved copper tubes and aluminium fins											
Fans		Axial Flying Bird 6 with rotating shroud											
Standard unit													
Quantity		3	3	4	4	4	5	5	6	6	7	7	8
Maximum total air flow	l/s	14460	14460	19280	19280	19280	24100	24100	28920	28920	33740	33740	38560
Maximum rotation speed	r/s	16	16	16	16	16	16	16	16	16	16	16	16
Evaporator		Direct expansion brazed-plate heat exchanger											
Water volume	l	16,2	16,2	16,2	20,7	20,7	38,7	48,6	48,6	48,6	48,6	52,2	58,5
Max. water-side operating pressure without hydraulic module	kPa	1000	1000	1000	1000	1000	1000	1000	1000	1000	1000	1000	1000
Hydraulic module (option)		Pump, Victaulic screen filter, relief valve, water and air vent valve, pressure sensors											
Pump		Centrifugal pump, monocell, 48,3 r/s, low- or high pressure (as required), single or dual (as required)											
Expansion tank volume (Option)	l	50	50	50	50	50	80	80	80	80	80	80	80
Buffer tank volume (option)	l	550	550	550	550	550	550	550	550	550	550	550	550
Max. water-side operating pressure with hydraulic module	kPa	400	400	400	400	400	400	400	400	400	400	400	400
Water connections with or without hydraulic module		Victaulic® type											
Connections	inches	3	3	3	3	3	4	4	4	4	4	4	4
External diameter	mm	88,5	88,6	88,7	88,8	88,9	114,3	114,4	114,5	114,6	114,7	114,8	114,9
Casing paint colour		Colour code RAL 7035											

(1) In dB ref=10^{-12} W, (A) weighting. Declared dual-number noise emission value in accordance with ISO 4871 with an uncertainty of +/-3 dB(A). Measured in accordance with ISO 9614-1 and certified by Eurovent. Cooling mode operation.
(2) In dB ref 20 µPa, (A) weighting. Declared dual-number noise emission value in accordance with ISO 4871 with an uncertainty of +/-3 dB(A). For information, calculated from the sound power Lw(A).
(3) Options: 116W = Variable-speed high pressure dual-pump hydraulic module, 307 = Water buffer tank module,
(4) Values are guidelines only. Refer to the unit name plate.

5.5 - Physical data 30RQP 165R-520R

30RQP		165R	180R	210R	230R	270R	310R	330R	370R	400R	430R	470R	520R
Sound levels													
Standard unit													
Sound power(1)	dB(A)	90,5	91,0	91,5	92,0	92,0	93,0	93,5	94,0	94,0	94,5	94,5	95,0
Sound pressure at 10 m(2)	dB(A)	58,0	58,5	59,5	60,0	60,0	60,5	61,0	61,5	61,5	62,0	62,0	62,5
Unit + option 15LS(3)													
Sound power(1)	dB(A)	85,0	86,0	86,5	87,0	87,0	88,0	88,0	89,0	89,0	89,5	90,0	90,0
Sound pressure at 10 m(2)	dB(A)	53,0	53,5	54,0	54,5	54,5	55,5	55,5	56,5	56,5	57,0	57,5	57,5
Unit + option 15LS+(3)													
Sound power(1)	dB(A)	83,0	84,0	84,5	85,0	85,0	86,0	86,0	86,5	87,0	87,5	87,5	88,0
Sound pressure at 10 m(2)	dB(A)	51,0	52,0	52,5	53,0	53,0	54,0	54,0	54,5	55,0	55,5	55,5	56,0
Dimensions - standard unit													
Standard unit													
Length	mm	2410	2410	2410	2410	2410	3604	3604	3604	3604	4798	4798	4798
Width	mm	2253	2253	2253	2253	2253	2253	2253	2253	2253	2253	2253	2253
Height	mm	2324	2324	2324	2324	2324	2324	2324	2324	2324	2324	2324	2324
Unit + option 307(3)													
Length	mm	3604	3604	3604	3604	3604	4798	4798	4798	4798	5992	5992	5992
Operating weight(4)													
Standard unit	kg	1569	1575	1784	1811	1817	2394	2452	2672	2678	3154	3180	3430
Unit + option 15LS/15LS+(3)	kg	1652	1658	1892	1920	1926	2520	2579	2817	2823	3317	3343	3611
Unit + option 15LS/15LS+ + option 116W(3)	kg	1787	1793	2039	2067	2073	2715	2774	3051	3057	3551	3614	3882
Unit + option 15LS/15LS+ + option 116W + option 307(3)	kg	2771	2777	3022	3049	3055	3725	3783	4060	4066	4551	4614	4882
Compressors		Hermetic Scroll 48,3 r/s											
Circuit A/C		1	1	2	2	2	2	2	2	2	3	3	4
Circuit B/D		2	2	2	2	2	3	3	4	4	4	4	4
Number of power stages		3	3	4	4	4	5	5	6	6	7	7	8
Unit PED category		III	III	III	III	III	III	IV	IV	IV	IV	IV	IV
Refrigerant(4)		R32 / A2L /GWP= 675 as per AR4											
Circuit A/C	kg	10,50	10,50	16,00	16,00	16,00	16,00	18,00	18,00	18,00	29,00	29,00	35,00
	tCO_2e	7,1	7,1	10,8	10,8	10,8	10,8	12,2	12,2	12,2	19,6	19,6	23,6
Circuit B/D	kg	16,00	16,00	16,00	16,00	16,00	28,50	28,50	34,00	34,00	34,50	35,00	35,00
	tCO_2e	10,8	10,8	10,8	10,8	10,8	19,2	19,2	23,0	23,0	23,3	23,6	23,6
Oil													
Circuit A/C	l	6,6	6,6	13,2	13,2	13,2	13,2	13,2	13,2	13,2	22,8	22,8	30,4
Circuit B/D	l	13,2	13,2	13,2	13,2	13,2	22,8	22,8	30,4	30,4	30,4	30,4	30,4
Capacity control		SmartVu™											
Minimum capacity	%	33	33	25	25	25	20	20	17	17	14	14	13
Condenser		Grooved copper tubes and aluminium fins											
Fans		Axial Flying Bird 6 with rotating shroud											
Standard unit													
Quantity		3	3	4	4	4	5	5	6	6	7	7	8
Maximum total air flow	l/s	14460	14460	19280	19280	19280	24100	24100	28920	28920	33740	33740	38560
Maximum rotation speed	r/s	16	16	16	16	16	16	16	16	16	16	16	16
Evaporator		Direct expansion brazed-plate heat exchanger											
Water volume	l	16,2	16,2	16,2	20,7	20,7	38,7	48,6	48,6	48,6	48,6	52,2	58,5
Max. water-side operating pressure without hydraulic module	kPa	1000	1000	1000	1000	1000	1000	1000	1000	1000	1000	1000	1000
Hydraulic module (option)		Pump, Victaulic screen filter, relief valve, water and air vent valve, pressure sensors											
Pump		Centrifugal pump, monocell, 48,3 r/s, low- or high pressure (as required), single or dual (as required)											
Expansion tank volume (Option)	l	50	50	50	50	50	80	80	80	80	80	80	80
Buffer tank volume (option)	l	550	550	550	550	550	550	550	550	550	550	550	550
Max. water-side operating pressure with hydraulic module	kPa	400	400	400	400	400	400	400	400	400	400	400	400
Water connections with or without hydraulic module		Victaulic® type											
Module 1/Module 2 connections(a)	inches	3	3	3	3	3	4	4	4	4	4	4	4
Module 1/Module 2 external diameter(a)	mm	88,5	88,6	88,7	88,8	88,9	114,3	114,4	114,5	114,6	114,7	114,8	114,9
Casing paint colour		Colour code RAL 7035											

(1) In dB ref=10^{-12} W, (A) weighting. Declared dual-number noise emission value in accordance with ISO 4871 with an uncertainty of +/-3 dB(A). Measured in accordance with ISO 9614-1 and certified by Eurovent. Cooling mode operation.
(2) In dB ref 20 µPa, (A) weighting. Declared dual-number noise emission value in accordance with ISO 4871 with an uncertainty of +/-3 dB(A). For information, calculated from the sound power Lw(A).
(3) Options: 15LS = Very low noise level, 15LS+= Ultra Low Noise, 116W = Variable-speed high pressure dual-pump hydraulic module, 307 = Water buffer tank module,
(4) Values are guidelines only. Refer to the unit name plate.
(a) Modules 1 and 2 only relate to sizes 740R to 1040R.

5.6 - Physical data 30RQP 570R-1040R

30RQP		570R	610R	680R	740R	800R	860R	940R	1040R
Sound levels									
Standard unit									
Sound power(1)	dB(A)	97,0	97,0	97,5	97,0	97,0	97,5	97,5	98,0
Sound pressure at 10 m(2)	dB(A)	64,0	64,5	65,0	64,5	64,5	65,0	65,0	65,5
Unit + option 15LS(3)									
Sound power(1)	dB(A)	92,5	92,5	93,5	92,0	92,0	92,5	93,0	93,0
Sound pressure at 10 m(2)	dB(A)	60,0	59,5	61,0	59,5	59,5	60,0	60,5	60,5
Unit + option 15LS+(3)									
Sound power(1)	dB(A)	90,0	90,0	90,5	89,5	90,0	90,5	90,5	91,0
Sound pressure at 10 m(2)	dB(A)	57,5	57,5	58,0	57,5	58,0	58,5	58,5	59,0
Dimensions - standard unit									
Standard unit									
Length	mm	5992	7186	7186	7708	7708	10096	10096	10096
Width	mm	2253	2253	2253	2253	2253	2253	2253	2253
Height	mm	2324	2324	2324	2324	2324	2324	2324	2324
Unit + option 307(3)									
Length	mm	7186	8380	8380	-	-	-	-	-
Operating weight(4)									
Standard unit	kg	4105	4728	4728	5344	5356	6308	6360	6859
Unit + option 15LS/15LS+(3)	kg	4244	4888	4888	5710	5722	6722	6774	7322
Unit + option 15LS/15LS+ + option 116W(3)	kg	4536	5181	5181	6102	6114	7103	7229	7764
Unit + option 15LS/15LS+ + option 116W + option 307(3)	kg	5543	6202	6202	-	-	-	-	-
Compressors		Hermetic Scroll 48,3 r/s							
Circuit A/C		2	3	3	2/2	2/2	3/3	3/3	4/4
Circuit B/D		3	3	3	4/4	4/4	4/4	4/4	4/4
Number of power stages		5	6	6	12	12	14	14	16
Unit PED category		IV	IV	IV	IV	IV	IV	IV	IV
Refrigerant(4)		R32 / A2L /GWP= 675 as per AR4							
Circuit A/C	kg	38,0	48,0	48,0	18,0/18,0	18,0/18,0	29,0/29,0	29,0/29,0	35,0/35,0
	tCO_2e	25,7	32,4	32,4	12,2/12,2	12,2/12,2	19,6/19,6	19,6/19,6	23,6/23,6
Circuit B/D	kg	48,0	48,0	48,0	34,0/34,0	34,0/34,0	34,5/34,5	35,0/35,0	35,0/35,0
	tCO_2e	32,4	32,4	32,4	23,0/23,0	23,0/23,0	23,3/23,3	23,6/23,6	23,6/23,6
Oil									
Circuit A/C	l	15,2	22,8	22,8	13,2/13,2	13,2/13,2	22,8/22,8	22,8/22,8	30,4/30,4
Circuit B/D	l	22,8	22,8	22,8	30,4/30,4	30,4/30,4	30,4/30,4	30,4/30,4	30,4/30,4
Capacity control		SmartVu™							
Minimum capacity	%	20	17	17	8	8	7	7	6
Condenser		Grooved copper tubes and aluminium fins							
Fans		Axial Flying Bird 6 with rotating shroud							
Standard unit									
Quantity		10	12	12	12	12	14	14	16
Maximum total air flow	l/s	48200	57840	57840	57840	57840	67480	67480	77120
Maximum rotation speed	r/s	16	16	16	16	16	16	16	16
Evaporator		Direct expansion brazed-plate heat exchanger							
Water volume	l	73	84	84	97,2	97,2	97,2	104,4	117
Max. water-side operating pressure without hydraulic module	kPa	1000	1000	1000	1000	1000	1000	1000	1000
Hydraulic module (option)		Pump, Victaulic screen filter, relief valve, water and air vent valve, pressure sensors							
Pump		Centrifugal pump, monocell, 48,3 r/s, low- or high pressure (as required), single or dual (as required)							
Expansion tank volume (Option)	l	80	80	80	-	-	-	-	-
Buffer tank volume (option)	l	550	550	550	-	-	-	-	-
Max. water-side operating pressure with hydraulic module	kPa	400	400	400	400	400	400	400	400
Water connections with or without hydraulic module		Victaulic® type							
Module 1/Module 2 connections(a)	inches	5	5	5	4/4	4/4	4/4	4/4	4/4
Module 1/Module 2 external diameter(a)	mm	139,7	139,7	139,7	114,3/ 114,3	114,3/ 114,3	114,3/ 114,3	114,3/ 114,3	114,3/ 114,3
Casing paint colour		Colour code RAL 7035							

(1) In dB ref=10^{-12} W, (A) weighting. Declared dual-number noise emission value in accordance with ISO 4871 with an uncertainty of +/-3 dB(A). Measured in accordance with ISO 9614-1 and certified by Eurovent. Cooling mode operation
(2) In dB ref 20 µPa, (A) weighting. Declared dual-number noise emission value in accordance with ISO 4871 with an uncertainty of +/-3 dB(A). For information, calculated from the sound power Lw(A).
(3) Options: 15LS = Very low noise level, 15LS+= Ultra Low Noise, 116W = Variable-speed high pressure dual-pump hydraulic module, 307 = Water buffer tank module,
(4) Values are guidelines only. Refer to the unit name plate.
(a) Modules 1 and 2 only relate to sizes 740R to 1040R.

5.7 - Electrical data 30RB 170R-950R

30RB		170R	190R	210R	230R	270R	310R	340R	380R
Power circuit supply									
Nominal voltage	V-ph-Hz	400 - 3 - 50							
Voltage range	V	360 - 440							
Control circuit supply		24 V via internal transformer							
Maximum operating input power(1)or(2)									
Circuit A&B	kW	74,6	81,2	90,8	99,4	118,6	133,9	148,3	163,5
Power factor at maximum power(1)or(2)									
Displacement Power Factor (Cos Phi), standard unit		0,83	0,83	0,83	0,83	0,83	0,83	0,83	0,83
Maximum operating current draw (Un)(1)or(2)									
Standard unit	A	129,0	141,2	157,8	172,0	205,2	231,6	256,5	282,9
Maximum current (Un-10%)(1)or(2)									
Standard unit	A	137,7	150,6	168,6	183,6	219,6	247,5	274,5	302,4
Maximum start-up current (Un)(2)+(3)									
Standard unit	A	305	354	370	348	418	444	469	496
Unit + option 25/25E	A	262	302	318	305	366	392	417	444

30RB		410R	450R	480R	550R	610R	670R	720R	770R	800R	870R	950R
Power circuit supply												
Nominal voltage	V-ph-Hz	400 - 3 - 50										
Voltage range	V	360 - 440										
Control circuit supply		24 V via internal transformer										
Maximum operating input power(1)or(2)												
Circuit A&B	kW	178,4	193,7	208,1	237,8	256,4	282,7	306,1	328,5	340,2	374,4	405,6
Power factor at maximum power(1)or(2)												
Displacement Power Factor (Cos Phi), standard unit		0,85	0,85	0,85	0,85	0,84	0,84	0,84	0,84	0,84	0,84	0,84
Maximum operating current draw (Un)(1)or(2)												
Standard unit	A	302,4	327,9	352,8	403,2	439,5	486,0	525,0	565,0	584,5	644,0	696,0
Maximum current (Un-10%)(1)or(2)												
Standard unit	A	324	351	378	432	472	522	564	607	628	692	748
Maximum start-up current (Un)(2)+(3)												
Standard unit	A	515	541	565	616	770	823	856	902	915	981	1027
Unit + option 25/25E	A	463	489	513	564	687	740	773	819	832	898	944

(1) Values at the unit's permanent maximum operating condition (as shown on the unit's nameplate).
(2) Values at the unit's maximum operating condition (as shown on the unit's nameplate).
(3) Maximum operating current of the smallest compressor(s) + fan current + locked rotor current of the largest compressor.

5.8 - Electrical data 30RBP 170R-950R

30RBP		170R	190R	210R	230R	270R	310R	340R	380R	410R
Power circuit supply										
Nominal voltage	V-ph-Hz	400 - 3 - 50								
Voltage range	V	360 - 440								
Control circuit supply		24 V via internal transformer								
Maximum operating input power(1)or(2)										
Circuit A&B	kW	74,8	81,5	91,1	99,8	118,9	134,3	148,7	164	178,4
Power factor at maximum power(1)or(2)										
Displacement Power Factor (Cos Phi), standard unit		0,85	0,86	0,85	0,85	0,85	0,85	0,85	0,85	0,85
Maximum operating current draw (Un)(1)or(2)										
Standard unit	A	126,3	137,6	154,2	168,4	201,6	227,1	252,0	277,5	302,4
Maximum current (Un-10%)(1)or(2)										
Standard unit	A	135	147	165	180	216	243	270	297	324
Maximum start-up current (Un)(2)+(3)										
Standard unit	A	302	350	367	344	414	440	465	490	515
Unit + option 25/25E	A	259	298	315	301	362	388	413	438	463

30RBP		450R	480R	550R	610R	670R	720R	770R	800R	870R	950R
Power circuit supply											
Nominal voltage	V-ph-Hz	400 - 3 - 50									
Voltage range	V	360 - 440									
Control circuit supply		24 V via internal transformer									
Maximum operating input power(1)or(2)											
Circuit A&B	kW	193,7	208,1	237,8	256,4	282,7	306,1	328,5	340,2	374,4	405,6
Power factor at maximum power(1)or(2)											
Displacement Power Factor (Cos Phi), standard unit		0,85	0,85	0,85	0,84	0,84	0,84	0,84	0,84	0,84	0,84
Maximum operating current draw (Un)(1)or(2)											
Standard unit	A	327,9	352,8	403,2	439,5	486,0	525,0	565,0	584,5	644,0	696,0
Maximum current (Un-10%)(1)or(2)											
Standard unit	A	351	378	432	472	522	564	607	628	692	748
Maximum start-up current (Un)(2)+(3)											
Standard unit	A	541	565	616	770	823	856	902	915	981	1027
Unit + option 25/25E	A	489	513	564	687	740	773	819	832	898	944

(1) Values at the unit's permanent maximum operating condition (as shown on the unit's nameplate).
(2) Values at the unit's maximum operating condition (as shown on the unit's nameplate).
(3) Maximum operating current of the smallest compressor(s) + fan current + locked rotor current of the largest compressor.

5.9 - Electrical data 30RQ 165R-520R

30RQ		165R	180R	210R	230R	270R	310R	330R	370R	400R	430R	470R	520R
Power circuit supply													
Nominal voltage	V-ph-Hz	400 - 3 - 50											
Voltage range	V	360 - 440											
Control circuit supply		24 V via internal transformer											
Maximum operating input power(1)or(2)													
Circuit A&B	kW	74,6	84,2	99,4	109,0	118,6	138,7	148,3	168,3	177,9	193,2	207,6	237,2
Power factor at maximum power(1)or(2)													
Displacement Power Factor (Cos Phi), standard unit		0,83	0,83	0,83	0,83	0,83	0,83	0,83	0,83	0,83	0,83	0,83	0,83
Maximum operating current draw (Un)(1)or(2)													
Standard unit	A	129	145,6	172	188,6	205,2	239,9	256,5	291,2	307,8	334,2	359,1	410,4
Maximum current (Un-10%)(1)or(2)													
Standard unit	A	140,7	156,7	187,6	203,6	219,6	258,5	274,5	313,4	329,4	360,3	384,3	439,2
Maximum start-up current (Un)(2)+(3)													
Standard unit	A	305	362	348	401	418	453	469	504	520	547	572	623
Unit + option 25/25E	A	262	310	305	349	366	401	417	452	468	495	520	571

(1) Values at the unit's permanent maximum operating condition (as shown on the unit's nameplate).
(2) Values at the unit's maximum operating condition (as shown on the unit's nameplate).
(3) Maximum operating current of the smallest compressor(s) + fan current + locked rotor current of the largest compressor.

5.10 - Electrical data 30RQP 165R-1040R

30RQP		165R	180R	210R	230R	270R	310R	330R	370R	400R	430R	470R	520R
Power circuit supply													
Nominal voltage	V-ph-Hz	400 - 3 - 50											
Voltage range	V	360 - 440											
Control circuit supply		24 V via internal transformer											
Maximum operating input power(1)or(2)													
Circuit A&B (Module 1/Module 2)(a)	kW	74,8	84,4	99,8	109,3	118,9	139,2	148,7	169	178,6	193,7	208,1	237,8
Power factor at maximum power(1)or(2)													
Displacement Power Factor (Cos Phi), standard unit		0,85	0,85	0,85	0,85	0,85	0,85	0,85	0,85	0,85	0,85	0,85	0,85
Maximum operating current draw (Un)(1)or(2)													
Standard unit (Module 1/Module 2)(a)	A	126,3	142,9	168,4	185	201,6	235,4	252	285,8	302,4	327,9	352,8	403,2
Maximum current (Un-10%)(1)or(2)													
Standard unit (Module 1/Module 2)(a)	A	138	154	184	200	216	254	270	308	324	354	378	432
Maximum start-up current (Un)(2)+(3)													
Standard unit (Module 1/Module 2)(a)	A	302	359	344	398	414	448	465	498	515	541	565	616
Unit + option 25/25E (Module 1/Module 2)(a)	A	259	307	301	346	362	396	413	446	463	489	513	564

30RQP		570R	610R	680R	740R	800R	860R	940R	1040R
Power circuit supply									
Nominal voltage	V-ph-Hz	400 - 3 - 50							
Voltage range	V	360 - 440							
Control circuit supply		24 V via internal transformer							
Maximum operating input power(1)or(2)									
Circuit A&B (Module 1/Module 2)(a)	kW	258,0	286,0	310,0	169,0 / 169,0	178,6 / 178,6	193,7 / 193,7	208,1 / 208,1	237,8 / 237,8
Power factor at maximum power(1)or(2)									
Displacement Power Factor (Cos Phi), standard unit		0,85	0,85	0,85	0,85	0,85	0,85	0,85	0,85
Maximum operating current draw (Un)(1)or(2)									
Standard unit (Module 1/Module 2)(a)	A	442	497	530	285,8 / 285,8	302,4 / 302,4	327,9 / 327,9	352,8 / 352,8	403,2 / 403,2
Maximum current (Un-10%)(1)or(2)									
Standard unit (Module 1/Module 2)(a)	A	475	528	570	308 / 308	324 / 324	354 / 354	378 / 378	432 / 432
Maximum start-up current (Un)(2)+(3)									
Standard unit (Module 1/Module 2)(a)	A	690	810	837	498 / 498	515 / 515	541 / 541	565 / 565	616 / 616
Unit + option 25/25E (Module 1/Module 2)(a)	A	631	751	778	446 / 446	463 / 463	489 / 489	513 / 513	564 / 564

(1) Values at the unit's permanent maximum operating condition (as shown on the unit's nameplate).
(2) Values at the unit's maximum operating condition (as shown on the unit's nameplate).
(3) Maximum operating current of the smallest compressor(s) + fan current + locked rotor current of the largest compressor.
(a) Modules 1 and 2 only relate to sizes 740R to 1040R.

5.11 - Short circuit withstand current

Short-circuit withstand current (TN system(1))

30RB-RBP		170R	190R	210R	230R	270R	310R	340R	380R	410R	450R
Rated short-circuit withstand currents											
Rated short time (1s) current - Icw	kA eff	5,5	8,5	8,5	8,5	8,5	20	20	20	20	20
Rated peak current - Ipk	kA pk	154	330	330	330	330	330	330	330	330	330
Value with upstream electrical protection(1)											
Rated conditional short circuit current Icc	kA eff	50	50	50	50	50	50	50	50	50	50
Associated protection		NSX160N / =S=	NSX250N / =S=	NSX250N / =S=	NSX250N / =S=	NSX250N / =S=	NSX250N / =S=	NSX400N / =S=	NSX400N / =S=	NSX400N / =S=	NSX400N / =S=
Associated protection		TM160D / LV430840	TM200D / LV431831	TM200D / LV431831	TM250D / LV431831	TM250D / LV431831	TM250D / LV431831	Micrologic 2,3 400 A / LV432693	Micrologic 2,3 400 A / LV432693	Micrologic 2,3 400 A / LV432693	Micrologic 2,3 400 A / LV432693

30RB-RBP		480R	550R	610R	670R	720R	770R	820R	870R	950R
Rated short-circuit withstand currents										
Rated short time (1s) current - Icw	kA eff	20	20	20	20	20	35	35	35	35
Rated peak current - Ipk	kA pk	330	330	330	330	330	330	330	330	330
Value with upstream electrical protection(1)										
Rated conditional short circuit current Icc	kA eff	50	50	50	50	50	50	50	50	50
Associated protection		NSX630N / =S=	NSX630N / =S=	NSX630N / =S=	NSX630N / =S=	NSX630N / =S=	NS800 / =S=	NS800 / =S=	NS800 / =S=	NS800 / =S=
Associated protection		Micrologic 2,3 630 A / LV432893	Micrologic 2,3 630 A / LV432893	Micrologic 2,3 630 A / LV432893	Micrologic 2,3 630 A / LV432893	Micrologic 2,3 630 A / LV432893	Micrologic 5,0 800 A / 34426	Micrologic 5,0 800 A / 34426	Micrologic 5,0 800 A / 34426	Micrologic 5,0 800 A / 34426

(1) If another current limitation protection device is used, its time-current and thermal constraint (I^2t) trip characteristics must be at least equivalent to those of the recommended protection.

Note: The short-circuit withstand current capability values above have been established for the TN system.

IT system: The short circuit holding current values given above for the TN system are not valid for IT; modifications are required.

30RQ-RQP		165R	180R	210R	230R	270R	310R	330R	370R	400R	430R
Rated short-circuit withstand currents											
Rated short time (1s) current - Icw (Module 1/Module 2)(a)	kA eff	5,5	8,5	8,5	8,5	8,5	20	20	20	20	20
Rated peak current - Ipk (Module 1/Module 2)(a)	kA pk	154	330	330	330	330	330	330	330	330	330
Value with upstream electrical protection(1)											
Rated conditional short circuit current Icc (Module 1/Module 2)(a)	kA eff	50	50	50	50	50	50	50	50	50	50
Associated protection - type (Module 1/Module 2)(a)		INS250	INS250	INS250	INS250	INS250	INS400	INS400	INS400	INS400	INS400
Associated protection (rating/reference)	Module 1(a)	TM160D / LV430840	TM200D / LV431831	TM250D / LV431831	TM250D / LV431831	TM250D / LV431831	Micrologic 2,3 400 A / LV432693	Micrologic 2,3 400 A / LV432693	Micrologic 2,3 400 A / LV432693	Micrologic 2,3 400 A / LV432693	Micrologic 2,3 400 A / LV432693
	Module 2(a)	-	-	-	-	-	-	-	-	-	-

30RQ-RQP		470R	520R	570R	610R	680R	740R	800R	860R	940R	1040R
Rated short-circuit withstand currents											
Rated short time (1s) current - Icw (Module 1/Module 2)(a)	kA eff	20	20	20	20	20	20/20	20/20	20/20	20/20	20/20
Rated peak current - Ipk (Module 1/Module 2)(a)	kA pk	330	330	330	330	330	330/330	330/330	330/330	330/330	330/330
Value with upstream electrical protection(1)											
Rated conditional short circuit current Icc (Module 1/Module 2)(a)	kA eff	50	50	50	50	50	50/50	50/50	50/50	50/50	50/50
Associated protection - type (Module 1/Module 2)(a)		INS500	INS500	INS630	INS630	INS630	INS400/ INS400	INS400/ INS400	INS400/ INS400	INS500/ INS500	INS500/ INS500
Associated protection (rating/reference)	Module 1(a)	Micrologic 2,3 630 A/ LV432893	Micrologic 2,3 630 A/ LV432893	Micrologic 2,3 630A/ LV432893	Micrologic 2,3 630A/ LV432893	Micrologic 2,3 630A/ LV432893	Micrologic 2,3 400 A/ LV432693	Micrologic 2,3 400 A/ LV432693	Micrologic 2,3 400 A/ LV432693	Micrologic 2,3 630 A/ LV432893	Micrologic 2,3 630 A/ LV432893
	Module 2(a)	-	-	-	-	-	Micrologic 2,3 400 A/ LV432693	Micrologic 2,3 400 A/ LV432693	Micrologic 2,3 400 A/ LV432693	Micrologic 2,3 630 A/ LV432893	Micrologic 2,3 630 A/ LV432893

(1) If another current limitation protection device is used, its time-current and thermal constraint (I^2t) trip characteristics must be at least equivalent to those of the recommended protection.

(a) Modules 1 and 2 only relate to sizes 740R to 1040R.

Note: The short-circuit withstand current capability values above have been established for the TN system.

IT system: The short circuit holding current values given above for the TN system are not valid for IT; modifications are required.

5.12 - Electrical data for the hydraulic module

The pumps that are factory-installed in these units have motors with efficiency class IE3 for > 0.75 kW motors. The additional electrical data required(1) is as follows:

For the low pressure single pump motors of 30RB/RBP 170R-550R units (option 116T)

No.(2)	Description(3)		170R	190R	210R	230R	270R	310R	340R	380R	410R	450R	480R	550R
1	Nominal efficiency at full load and nominal voltage	%	86,4	86,4	86,4	86,4	86,4	87,5	87,5	87,5	89,6	89,6	89,6	89,7
1	Nominal efficiency at 75% of full load and nominal voltage	%	86,9	86,9	86,9	86,9	86,9	88,2	88,2	88,2	90,4	90,4	90,4	90
1	Nominal efficiency at 50% of full load and nominal voltage	%	85,7	85,7	85,7	85,7	85,7	87,5	87,5	87,5	89,9	89,9	89,9	89
2	Efficiency level	-	IE3											
3	Year of manufacture	-	This information varies depending on the manufacturer and model at the time of incorporation. Please refer to the motor name plates,											
4	Manufacturer's name and trademark, commercial registration number and head office of manufacturer	-	Same as above											
5	Product model number	-	Same as above											
6	Number of motor poles	-	2											
7-1	Nominal shaft power output at full load and nominal voltage (400 V)	kW	2,2	2,2	2,2	2,2	2,2	3	3	3	4	4	4	5,5
7-2	Maximum input power (400 V)(4)	kW	2,53	2,53	2,53	2,53	2,53	3,44	3,44	3,44	4,49	4,49	4,49	6,17
8	Nominal input frequency	Hz	50											
9-1	Nominal voltage	V	3 x 400											
9-2	Maximum current drawn (400 V)(5)	A	4,56	4,56	4,56	4,56	4,56	6,33	6,33	6,33	7,75	7,75	7,75	10,40
10	Nominal speed	r/s - rpm	48 - 2900											
11	Product disassembly, recycling or disposal at end of life	-	Disassembly using standard tools. Disposal and recycling using an appropriate company											
12	Operating conditions for which the motor is specifically designed													
	I - Altitudes above sea level	m	< 1000(6)											
	II - Ambient air temperature	°C	< 40											
	III - Maximum operating temperature	°C	Please refer to the operating conditions given in this manual or in the specific conditions given in the selection programs.											
	IV - Potentially explosive atmospheres	-	Non ATEX environment											

(1) Required by regulation No. 2019/1781 concerning the application of directive 2009/125/EC on the ecodesign requirements for electric motors.
(2) Item number imposed by regulation No. 2019/1781, annex I2b.
(3) Description given by regulation No. 2019/1781, annex I2b.
(4) To obtain the maximum input power for a unit with a hydraulic module, add the “maximum operating input power” for the unit (see Electrical data table) to the pump power.
(5) To obtain the maximum operating intensity for a unit with a hydraulic module, add the “maximum operating intensity” for the unit (see Electrical data table) to the pump intensity.
(6) Above 1000 m, a degradation of 3% for each 500 m should be taken into consideration.

For the low pressure dual pump motors of 30RB/RBP 170R-550R units (option 116U)

No.(2)	Description(3)		170R	190R	210R	230R	270R	310R	340R	380R	410R	450R	480R	550R
1	Nominal efficiency at full load and nominal voltage	%	85,9	85,9	86,4	86,4	87,5	87,5	87,5	87,5	89,6	89,6	89,6	89,7
1	Nominal efficiency at 75% of full load and nominal voltage	%	86,4	86,4	86,9	86,9	88,2	88,2	88,2	88,2	90,4	90,4	90,4	90
1	Nominal efficiency at 50% of full load and nominal voltage	%	84,9	84,9	85,7	85,7	87,5	87,5	87,5	87,5	89,9	89,9	89,9	89
2	Efficiency level	-	IE3											
3	Year of manufacture	-	This information varies depending on the manufacturer and model at the time of incorporation. Please refer to the motor name plates,											
4	Manufacturer's name and trademark, commercial registration number and head office of manufacturer	-	Same as above											
5	Product model number	-	Same as above											
6	Number of motor poles	-	2											
7-1	Nominal shaft power output at full load and nominal voltage (400 V)	kW	1,5	1,5	2,2	2,2	3	3	3	3	4	4	4	5,5
7-2	Maximum input power (400 V)(4)	kW	1,76	1,76	2,53	2,53	3,44	3,44	3,44	3,44	4,49	4,49	4,49	6,17
8	Nominal input frequency	Hz	50											
9-1	Nominal voltage	V	3 x 400											
9-2	Maximum current drawn (400 V)(5)	A	3,17	3,17	4,56	4,56	6,33	6,33	6,33	6,33	7,75	7,75	7,75	10,40
10	Nominal speed	r/s - rpm	48 - 2900											
11	Product disassembly, recycling or disposal at end of life	-	Disassembly using standard tools. Disposal and recycling using an appropriate company											
12	Operating conditions for which the motor is specifically designed													
	I - Altitudes above sea level	m	< 1000(6)											
	II - Ambient air temperature	°C	< 40											
	III - Maximum operating temperature	°C	Please refer to the operating conditions given in this manual or in the specific conditions given in the selection programs.											
	IV - Potentially explosive atmospheres	-	Non ATEX environment											

(1) Required by regulation No. 2019/1781 concerning the application of directive 2009/125/EC on the ecodesign requirements for electric motors.
(2) Item number imposed by regulation No. 2019/1781, annex I2b.
(3) Description given by regulation No. 2019/1781, annex I2b.
(4) To obtain the maximum input power for a unit with a hydraulic module, add the “maximum operating input power” for the unit (see Electrical data table) to the pump power.
(5) To obtain the maximum operating intensity for a unit with a hydraulic module, add the “maximum operating intensity” for the unit (see Electrical data table) to the pump intensity.
(6) Above 1000 m, a degradation of 3% for each 500 m should be taken into consideration.

For the high pressure single and dual-pump motors of 30RB/RBP 170R-950R units (options 116R, 116S, 116V, 116W)

No.(2)	Description(3)		170R	190R	210R	230R	270R	310R	340R	380R	410R	450R
1	Nominal efficiency at full load and nominal voltage	%	87,5	87,5	87,5	87,5	89,6	89,6	89,7	89,7	89,7	90,8
1	Nominal efficiency at 75% of full load and nominal voltage	%	88,2	88,2	88,2	88,2	90,4	90,4	90	90	90	90,8
1	Nominal efficiency at 50% of full load and nominal voltage	%	87,5	87,5	87,5	87,5	89,9	89,9	89	89	89	89,6
2	Efficiency level	-	IE3									
3	Year of manufacture	-	This information varies depending on the manufacturer and model at the time of incorporation. Please refer to the motor name plates,									
4	Manufacturer's name and trademark, commercial registration number and head office of manufacturer	-	Same as above									
5	Product model number	-	Same as above									
6	Number of motor poles	-	2									
7-1	Nominal shaft power output at full load and nominal voltage (400 V)	kW	3	3	3	3	4	4	5,5	5,5	5,5	7,5
7-2	Maximum input power (400 V)(4)	kW	3,44	3,44	3,44	3,44	4,49	4,49	6,17	6,17	6,17	8,32
8	Nominal input frequency	Hz	50									
9-1	Nominal voltage	V	3 x 400									
9-2	Maximum current drawn (400 V)(5)	A	6,33	6,33	6,33	6,33	7,75	7,75	10,40	10,40	10,40	14,10
10	Nominal speed	r/s - rpm	48 - 2900									
11	Product disassembly, recycling or disposal at end of life	-	Disassembly using standard tools. Disposal and recycling using an appropriate company									
12	Operating conditions for which the motor is specifically designed											
	I - Altitudes above sea level	m	< 1000(6)									
	II - Ambient air temperature	°C	< 40									
	III - Maximum operating temperature	°C	Please refer to the operating conditions given in this manual or in the specific conditions given in the selection programs.									
	IV - Potentially explosive atmospheres	-	Non ATEX environment									

No.(2)	Description(3)		480R	550R	610R	670R	720R	770R	820R	870R	950R
1	Nominal efficiency at full load and nominal voltage	%	90,8	90,8	91,6	91,6	91,6	93,1	93,1	93,1	93,1
1	Nominal efficiency at 75% of full load and nominal voltage	%	90,8	90,8	92,2	92,2	92,2	93,3	93,3	93,3	93,3
1	Nominal efficiency at 50% of full load and nominal voltage	%	89,6	89,6	91,7	91,7	91,7	92,7	92,7	92,7	92,7
2	Efficiency level	-	IE3								
3	Year of manufacture	-	This information varies depending on the manufacturer and model at the time of incorporation. Please refer to the motor name plates,								
4	Manufacturer's name and trademark, commercial registration number and head office of manufacturer	-	Same as above								
5	Product model number	-	Same as above								
6	Number of motor poles	-	2								
7-1	Nominal shaft power output at full load and nominal voltage (400 V)	kW	7,5	7,5	11	11	11	15	15	15	15
7-2	Maximum input power (400 V)(4)	kW	8,32	8,32	12,00	12,00	12,00	16,20	16,20	16,20	16,20
8	Nominal input frequency	Hz	50								
9-1	Nominal voltage	V	3 x 400								
9-2	Maximum current drawn (400 V)(5)	A	14,10	14,10	20,20	20,20	20,20	26,60	26,60	26,60	26,60
10	Nominal speed	r/s - rpm	48 - 2900								
11	Product disassembly, recycling or disposal at end of life	-	Disassembly using standard tools. Disposal and recycling using an appropriate company								
12	Operating conditions for which the motor is specifically designed										
	I - Altitudes above sea level	m	< 1000(6)								
	II - Ambient air temperature	°C	< 40								
	III - Maximum operating temperature	°C	Please refer to the operating conditions given in this manual or in the specific conditions given in the selection programs.								
	IV - Potentially explosive atmospheres	-	Non ATEX environment								

(1) Required by regulation No. 2019/1781 concerning the application of directive 2009/125/EC on the ecodesign requirements for electric motors.
(2) Item number imposed by regulation No. 2019/1781, annex I2b.
(3) Description given by regulation No. 2019/1781, annex I2b.
(4) To obtain the maximum input power for a unit with a hydraulic module, add the “maximum operating input power” for the unit (see Electrical data table) to the pump power.
(5) To obtain the maximum operating intensity for a unit with a hydraulic module, add the “maximum operating intensity” for the unit (see Electrical data table) to the pump intensity.
(6) Above 1000 m, a degradation of 3% for each 500 m should be taken into consideration.

For the low pressure single pump motors of 30RQ/RQP 165R-520R units (option 116T)

No.(2)	Description(3)		165R	180R	210R	230R	270R	310R	330R	370R	400R	430R	470R	520R
1	Nominal efficiency at full load and nominal voltage	%	86,4	86,4	86,4	86,4	86,4	87,5	89,6	89,6	89,6	89,6	89,7	89,7
1	Nominal efficiency at 75% of full load and nominal voltage	%	86,9	86,9	86,9	86,9	86,9	88,2	90,4	90,4	90,4	90,4	90	90
1	Nominal efficiency at 50% of full load and nominal voltage	%	85,7	85,7	85,7	85,7	85,7	87,5	89,9	89,9	89,9	89,9	89	89
2	Efficiency level	-	IE3											
3	Year of manufacture	-	This information varies depending on the manufacturer and model at the time of incorporation. Please refer to the motor name plates,											
4	Manufacturer's name and trademark, commercial registration number and head office of manufacturer	-	Same as above											
5	Product model number	-	Same as above											
6	Number of motor poles	-	2											
7-1	Nominal shaft power output at full load and nominal voltage (400 V)	kW	2,2	2,2	2,2	2,2	2,2	3	4	4	4	4	5,5	5,5
7-2	Maximum input power (400 V)(4)	kW	2,53	2,53	2,53	2,53	2,53	3,44	4,49	4,49	4,49	4,49	6,17	6,17
8	Nominal input frequency	Hz	50											
9-1	Nominal voltage	V	3 x 400											
9-2	Maximum current drawn (400 V)(5)	A	4,56	4,56	4,56	4,56	4,56	6,33	7,75	7,75	7,75	7,75	10,40	10,40
10	Nominal speed	r/s - rpm	48 - 2900											
11	Product disassembly, recycling or disposal at end of life	-	Disassembly using standard tools. Disposal and recycling using an appropriate company											
12	Operating conditions for which the motor is specifically designed													
	I - Altitudes above sea level	m	< 1000(6)											
	II - Ambient air temperature	°C	< 40											
	III - Maximum operating temperature	°C	Please refer to the operating conditions given in this manual or in the specific conditions given in the selection programs.											
	IV - Potentially explosive atmospheres	-	Non ATEX environment											

For the low pressure dual pump motors of 30RQ/RQP 165R-520R units (option 116U)

No.(2)	Description(3)		165R	180R	210R	230R	270R	310R	330R	370R	400R	430R	470R	520R
1	Nominal efficiency at full load and nominal voltage	%	85,9	86,4	87,5	87,5	87,5	87,5	89,6	89,6	89,6	89,6	89,7	89,7
1	Nominal efficiency at 75% of full load and nominal voltage	%	86,4	86,9	88,2	88,2	88,2	88,2	90,4	90,4	90,4	90,4	90	90
1	Nominal efficiency at 50% of full load and nominal voltage	%	84,9	85,7	87,5	87,5	87,5	87,5	89,9	89,9	89,9	89,9	89	89
2	Efficiency level	-	IE3											
3	Year of manufacture	-	This information varies depending on the manufacturer and model at the time of incorporation. Please refer to the motor name plates,											
4	Manufacturer's name and trademark, commercial registration number and head office of manufacturer	-	Same as above											
5	Product model number	-	Same as above											
6	Number of motor poles	-	2											
7-1	Nominal shaft power output at full load and nominal voltage (400 V)	kW	1,5	2,2	3	3	3	3	4	4	4	4	5,5	5,5
7-2	Maximum input power (400 V)(4)	kW	1,76	2,53	3,44	3,44	3,44	3,44	4,49	4,49	4,49	4,49	6,17	6,17
8	Nominal input frequency	Hz	50											
9-1	Nominal voltage	V	3 x 400											
9-2	Maximum current drawn (400 V)(5)	A	3,17	4,56	6,33	6,33	6,33	6,33	7,75	7,75	7,75	7,75	10,40	10,40
10	Nominal speed	r/s - rpm	48 - 2900											
11	Product disassembly, recycling or disposal at end of life	-	Disassembly using standard tools. Disposal and recycling using an appropriate company											
12	Operating conditions for which the motor is specifically designed													
	I - Altitudes above sea level	m	< 1000(6)											
	II - Ambient air temperature	°C	< 40											
	III - Maximum operating temperature	°C	Please refer to the operating conditions given in this manual or in the specific conditions given in the selection programs.											
	IV - Potentially explosive atmospheres	-	Non ATEX environment											

(1) Required by regulation No. 2019/1781 concerning the application of directive 2009/125/EC on the ecodesign requirements for electric motors.
(2) Item number imposed by regulation No. 2019/1781, annex I2b.
(3) Description given by regulation No. 2019/1781, annex I2b.
(4) To obtain the maximum input power for a unit with a hydraulic module, add the “maximum operating input power” for the unit (see Electrical data table) to the pump power.
(5) To obtain the maximum operating intensity for a unit with a hydraulic module, add the “maximum operating intensity” for the unit (see Electrical data table) to the pump intensity.
(6) Above 1000 m, a degradation of 3% for each 500 m should be taken into consideration.

For the high pressure single pump motors of 30RQ/RQP 165R-1040R units (options 116R, 116V)

No.(2)	Description(3)		165R	180R	210R	230R	270R	310R	330R	370R	400R	430R	470R	520R
1	Nominal efficiency at full load and nominal voltage	%	87,5	87,5	89,6	89,6	89,6	89,7	89,7	89,7	89,7	90,8	90,8	90,8
1	Nominal efficiency at 75% of full load and nominal voltage	%	88,2	88,2	90,4	90,4	90,4	90	90	90	90	90,8	90,8	90,8
1	Nominal efficiency at 50% of full load and nominal voltage	%	87,5	87,5	89,9	89,9	89,9	89	89	89	89	89,6	89,6	89,6
2	Efficiency level	-	IE3											
3	Year of manufacture	-	This information varies depending on the manufacturer and model at the time of incorporation. Please refer to the motor name plates,											
4	Manufacturer's name and trademark, commercial registration number and head office of manufacturer	-	Same as above											
5	Product model number	-	Same as above											
6	Number of motor poles	-	2											
7-1	Nominal capacity on the shaft at full-load and nominal voltage Module 1/Module 2(a) (400 V)	kW	3	3	4	4	4	5,5	5,5	5,5	5,5	7,5	7,5	7,5
7-2	Maximum input power, Module 1/Module 2(a) (400 V)(4)	kW	3,44	3,44	4,49	4,49	4,49	6,17	6,17	6,17	6,17	8,32	8,32	8,32
8	Rated input frequency	Hz	50											
9-1	Nominal voltage	V	3 x 400											
9-2	Maximum input power, Module 1/Module 2(a) (400 V)(5)	A	6,33	6,33	7,75	7,75	7,75	10,40	10,40	10,40	10,40	14,10	14,10	14,10
10	Nominal speed	r/s - rpm	48 - 2900											
11	Product disassembly, recycling or disposal at end of life	-	Disassembly using standard tools. Disposal and recycling using an appropriate company											
12	Operating conditions for which the motor is specifically designed													
	I - Altitudes above sea level	m	< 1000(6)											
	II - Ambient air temperature	°C	< 40											
	III - Maximum operating temperature	°C	Please refer to the operating conditions given in this manual or in the specific conditions given in the selection programs.											
	IV - Potentially explosive atmospheres	-	Non ATEX environment											

No.(2)	Description(3)		570R	610R	680R	740R	800R	860R	940R	1040R
1	Nominal efficiency at full load and nominal voltage	%	91,6	93,1	93,1	89,7	89,7	90,8	90,8	90,8
1	Nominal efficiency at 75% of full load and nominal voltage	%	92,2	93,3	93,3	90	90	90,8	90,8	90,8
1	Nominal efficiency at 50% of full load and nominal voltage	%	91,7	92,7	92,7	89	89	89,6	89,6	89,6
2	Efficiency level	-	IE3							
3	Year of manufacture	-	This information varies depending on the manufacturer and model at the time of incorporation. Please refer to the motor name plates,							
4	Manufacturer's name and trademark, commercial registration number and head office of manufacturer	-	Same as above							
5	Product model number	-	Same as above							
6	Number of motor poles	-	2							
7-1	Nominal capacity on the shaft at full-load and nominal voltage Module 1/Module 2(a) (400 V)	kW	11	15	15	5,5/5,5	5,5/5,5	7,5/7,5	7,5/7,5	7,5/7,5
7-2	Maximum input power, Module 1/Module 2(a) (400 V)(4)	kW	12,00	16,20	16,20	6,17/ 6,17	6,17/ 6,17	8,32/ 8,32	8,32/ 8,32	8,32/ 8,32
8	Rated input frequency	Hz	50							
9-1	Nominal voltage	V	3 x 400							
9-2	Maximum input power, Module 1/Module 2(a) (400 V)(5)	A	20,20	26,60	26,60	14,10/ 14,10	14,10/ 14,10	14,10/ 14,10	14,10/ 14,10	14,10/ 14,10
10	Nominal speed	r/s - rpm	48 - 2900							
11	Product disassembly, recycling or disposal at end of life	-	Disassembly with standard tools, disposal and recycling using an appropriate company							
12	Operating conditions for which the motor is specifically designed									
	I - Altitudes above sea level	m	< 1000(6)							
	II - Ambient air temperature	°C	< 40							
	III - Maximum operating temperature	°C	Please refer to the operating conditions given in this manual or in the specific conditions given in the selection programs,							
	IV - Potentially explosive atmospheres	-	Non ATEX environment							

(1) Required by regulation No. 2019/1781 concerning the application of directive 2009/125/EC on the ecodesign requirements for electric motors.
(2) Item number imposed by regulation No. 2019/1781, annex I2b.
(3) Description given by regulation No. 2019/1781, annex I2b.
(4) To obtain the maximum input power for a unit with a hydraulic module, add the “maximum operating input power” for the unit (see Electrical data table) to the pump power.
(5) To obtain the maximum operating intensity for a unit with a hydraulic module, add the “maximum operating intensity” for the unit (see Electrical data table) to the pump intensity.
(6) Above 1000 m, a degradation of 3% for each 500 m should be taken into consideration.
(a) Modules 1 and 2 only relate to sizes 740R to 1040R.

For the high pressure dual pump motors of 30RQ/RQP 165R-1040R units (options 116S, 116W)

No.(2)	Description(3)		165R	180R	210R	230R	270R	310R	330R	370R	400R	430R	470R	520R
1	Nominal efficiency at full load and nominal voltage	%	87,5	87,5	89,6	89,6	89,6	89,7	89,7	90,8	90,8	90,8	90,8	90,8
1	Nominal efficiency at 75% of full load and nominal voltage	%	88,2	88,2	90,4	90,4	90,4	90	90	90,8	90,8	90,8	90,8	90,8
1	Nominal efficiency at 50% of full load and nominal voltage	%	87,5	87,5	89,9	89,9	89,9	89	89	89,6	89,6	89,6	89,6	89,6
2	Efficiency level	-	IE3											
3	Year of manufacture	-	This information varies depending on the manufacturer and model at the time of incorporation. Please refer to the motor name plates,											
4	Manufacturer's name and trademark, commercial registration number and head office of manufacturer	-	Same as above											
5	Product model number	-	Same as above											
6	Number of motor poles	-	2											
7-1	Nominal capacity on the shaft at full-load and nominal voltage Module 1/Module 2(a) (400 V)	kW	3	3	4	4	4	5,5	5,5	7,5	7,5	7,5	7,5	7,5
7-2	Maximum input power, Module 1/Module 2(a) (400 V)(4)	kW	3,44	3,44	4,49	4,49	4,49	6,17	6,17	8,32	8,32	8,32	8,32	8,32
8	Rated input frequency	Hz	50											
9-1	Nominal voltage	V	3 x 400											
9-2	Maximum input power, Module 1/Module 2(a) (400 V)(5)	A	6,33	6,33	7,75	7,75	7,75	10,40	10,40	14,10	14,10	14,10	14,10	14,10
10	Nominal speed	r/s - rpm	48 - 2900											
11	Product disassembly, recycling or disposal at end of life	-	Disassembly using standard tools. Disposal and recycling using an appropriate company											
12	Operating conditions for which the motor is specifically designed													
	I - Altitudes above sea level	m	< 1000(6)											
	II - Ambient air temperature	°C	< 40											
	III - Maximum operating temperature	°C	Please refer to the operating conditions given in this manual or in the specific conditions given in the selection programs.											
	IV - Potentially explosive atmospheres	-	Non ATEX environment											

No.(2)	Description(3)		570R	610R	680R	740R	800R	860R	940R	1040R
1	Nominal efficiency at full load and nominal voltage	%	91,6	93,1	93,1	89,7	89,7	90,8	90,8	90,8
1	Nominal efficiency at 75% of full load and nominal voltage	%	92,2	93,3	93,3	90	90	90,8	90,8	90,8
1	Nominal efficiency at 50% of full load and nominal voltage	%	91,7	92,7	92,7	89	89	89,6	89,6	89,6
2	Efficiency level	-	IE3							
3	Year of manufacture	-	This information varies depending on the manufacturer and model at the time of incorporation. Please refer to the motor name plates,							
4	Manufacturer's name and trademark, commercial registration number and head office of manufacturer	-	Same as above							
5	Product model number	-	Same as above							
6	Number of motor poles	-	2							
7-1	Nominal capacity on the shaft at full-load and nominal voltage Module 1/Module 2(a) (400 V)	kW	11	15	15	5,5/5,5	5,5/5,5	7,5/7,5	7,5/7,5	7,5/7,5
7-2	Maximum input power, Module 1/Module 2(a) (400 V)(4)	kW	12,00	16,20	16,20	6,17/ 6,17	6,17/ 6,17	8,32/ 8,32	8,32/ 8,32	8,32/ 8,32
8	Rated input frequency	Hz	50							
9-1	Nominal voltage	V	3 x 400							
9-2	Maximum input power, Module 1/Module 2(a) (400 V)(5)	A	20,20	26,60	26,60	14,10/ 14,10	14,10/ 14,10	14,10/ 14,10	14,10/ 14,10	14,10/ 14,10
10	Nominal speed	r/s - rpm	48 - 2900							
11	Product disassembly, recycling or disposal at end of life	-	Disassembly with standard tools, disposal and recycling using an appropriate company							
12	Operating conditions for which the motor is specifically designed									
	I - Altitudes above sea level	m	< 1000(6)							
	II - Ambient air temperature	°C	< 40							
	III - Maximum operating temperature	°C	Please refer to the operating conditions given in this manual or in the specific conditions given in the selection programs,							
	IV - Potentially explosive atmospheres	-	Non ATEX environment							

(1) Required by regulation No. 2019/1781 concerning the application of directive 2009/125/EC on the ecodesign requirements for electric motors.
(2) Item number imposed by regulation No. 2019/1781, annex I2b.
(3) Description given by regulation No. 2019/1781, annex I2b.
(4) To obtain the maximum input power for a unit with a hydraulic module, add the “maximum operating input power” for the unit (see Electrical data table) to the pump power.
(5) To obtain the maximum operating intensity for a unit with a hydraulic module, add the “maximum operating intensity” for the unit (see Electrical data table) to the pump intensity.
(6) Above 1000 m, a degradation of 3% for each 500 m should be taken into consideration.
(a) Modules 1 and 2 only relate to sizes 740R to 1040R.

5.13 - Electrical data notes for the compressors

Compressor	I Nom(1)	I Max (Un)(2)	I Max (Un - 10%)(3)	LRA A(4)	I start option 25/25E A(5)	LRYA A(6)	LRDA A(7)	Cos Phi nom.(8)	Cos Phi Max.(9)
00PSG003209700A	29,7	39,1 A	43 A	215	172	NA	NA	0,84	0,85
00PSG003215200A	35,9	47,4 A	51 A	260	208	NA	NA	0,84	0,85
00PSG003237600A	56,9	76 A	82 A	413	330	NA	NA	0,83	0,84
00PSG003237000A	61,1	82,5 A	88 A	413	330	NA	NA	0,84	0,84

(1) Nominal current draw (A) under standard Eurovent conditions (see definition of conditions under nominal unit current draw)
(2) Maximum operating current
(3) Maximum compressor operating current, limited by the unit (current given for maximum capacity at 360 V)
(4) Locked rotor current at nominal voltage, corresponding to the direct start-up current
(5) Locked rotor current with electronic starter at nominal voltage
(6) Locked rotor current in star connection (connection during compressor start-up)
(7) Locked rotor current with delta connection
(8) Values recorded under standard Eurovent conditions: Evaporator water outlet/inlet = 12 °C/7 °C. Condenser water outlet/inlet = 30 °C/35 °C.
(9) Value recorded at maximum capacity and nominal voltage

5.14 - Distribution of compressors per circuit

30RB-30RBP

Compressor	Circuit	170R	190R	210R	230R	270R	310R	340R	380R	410R
00PSG003209700A	A	1			2				3	
	B	2	2		2		3			
00PSG003215200A	A		1	1		2	2	2		3
	B			2		2		3	3	3

Compressor	Circuit	450R	480R	550R	610R	670R	720R	770R	800R	870R	950R
00PSG003209700A	A	3									
	B										
00PSG003215200A	A		3	4							
	B	4	4	4							
00PSG003237600A	A					3		3		4	
	B					3		4	4	4	
00PSG003237000A	A				2		3		3		4
	B				3		3				4

30RQ-30RQP

Compressor	Circuit	165R	180R	210R	230R	270R	310R	330R	370R	400R
00PSG003209700A	A/C	1	1	2	2		2		2	
	B/D	2		2						
00PSG003215200A	A/C					2		2		2
	B/D		2		2	2	3	3	4	4

Compressor	Circuit	430R	470R	520R	570R	610R	680R	740R	800R	860R	940R	1040R
00PSG003209700A	A/C	3						2 / 2		3 / 3		
	B/D											
00PSG003215200A	A/C		3	4					2 / 2		3 / 3	4 / 4
	B/D	4	4	4				4 / 4	4 / 4	4 / 4	4 / 4	4 / 4
00PSG004120400A	A					3						
	B					3						
00PSG004117000A	A				2		3					
	B				3		3					

5.15 - Comments on electrical data notes

- 30RB/30RBP units have a single power connection point located immediately upstream of the main switch.
- 30RQ/30RQP units from 165R to 520R have a single power connection point located immediately upstream of the main disconnect switch.
- 30RQP units from 620R to 1040R have two connection points located immediately upstream of the main disconnect switch for each module.
- The control box includes:
  - A main disconnect switch,
  - The motor start-up and protection devices for each compressor, the fans and the pumps,
  - The control devices.
- Field connections:
  All connections to the system and the electrical installations must be in accordance with all applicable codes.
- 30RB/30RBP 30RQ/30RQP units are designed and built to ensure conformance with these codes. The recommendations of European standard EN 60204-1 (corresponding to IEC 60204-1) (Machine safety - Electrical machine components - part 1: General regulations) are specifically taken into account, when designing the electrical equipment.

Notes

- Generally the recommendations of IEC 60364 are accepted as compliance with the requirements of the installation regulation.
- Compliance with EN 60204-1 is the best means of ensuring compliance with the requirements (§1.5.1) of the Machinery Directive.
- Annex B of standard EN 60204-1 specifies the electrical features used for the operation of the units.
- Operating conditions of 30RB/30RBP 30RQ/30RQP units are described below:

1. Environment(1)
   The classification of the environment is specified in standard EN 60364:
   - Outdoor installation(1),
   - Ambient temperature range: Minimum temperature -20 °C to +48 °C,
   - Altitude: AC1 of 2000 m or less (for the hydraulic module, see the paragraph "Electrical data for the hydraulic module"),
   - Presence of solid foreign bodies: Class AE3 (no significant dust present)(1),
   - Presence of corrosive and polluting substances, class AF1 (negligible),
   - Competence of personnel: BA4 (trained personnel).
2. Compatibility for low-frequency conducted disturbances at class 2 levels as per the IEC 61000-2-4 standard:
   - Power supply frequency variation: +- 2Hz
   - Phase imbalance: 2%
   - Total Voltage Harmonic Distortion (THDV): 8%
3. The neutral (N) wire must not be connected directly to the unit (if necessary use a transformer).
4. Overcurrent protection of the power supply conductors is not provided with the unit.
5. The factory-fitted disconnect switch(es)/circuit breaker(s) are of a type suitable for power interruption in accordance with EN 60947-3 (corresponds to IEC 60947-3).
6. The units are designed for connection to TN type networks (IEC 60364). In IT networks, if noise filters are integrated into the variable frequency drive(s), this will render the units unsuitable for their intended purpose. In addition, the equipment characteristics in case of insulation failure are modified. Provide a local earth; consult competent local organisations to complete the electrical installation.
   Machines 30RB/30RBP 30RQ/30RQP are designed for use in domestic / residential and industrial environments:
   Machines that are not equipped with variable speed drives comply with general standards.
   - EN IEC 61000-6-3: General standards - Standard emission for residential, commercial and light industry,
   - EN IEC 61000-6-2: General standards - Immunity for industrial environments. Machines equipped with one or more variable frequency drives (RBP RQP, options: 28, 116V, 116W) comply with standard EN61800 - 3 "Variable-speed electrical power drive systems - Part 3: EMC requirements and specific test methods" for the following classifications: Use in first and second environments(2).
   - Category C3 applicable in the first environment, on stationary devices designed to be installed and commissioned by a professional.

Warning: In a residential environment, this product may cause radio interference; in this case, additional mitigation measures could be required.

- Leakage currents: If protection by monitoring the leakage currents is necessary to ensure the safety of the installation, the presence of a circuit with a DC component as well as leakage currents introduced by the use of variable frequency drives in the unit must be considered (RBP, RQP, options: 28, 116V, 116W). In particular, a reinforced immunity protection type and/or a control value not lower than 150 mA are recommended when selecting differential protection devices.

Note: If particular aspects of an actual installation do not conform to the conditions described above, or if there are other conditions which should be considered, always contact your local representative.

(1) The required protection level for this class is IP43BW (according to reference document IEC 60529). As all 30RB/30RBP 30RQ/30RQP units are class IP54, they fulfil this protection condition.

(2) - Example of installations included in the first environment: Commercial and residential buildings.
- Example of installations included in the second environment: Industrial areas, technical facilities supplied by a specific transformer.

Please refer to the certified dimensional drawings supplied with the unit.

6.1 - Power supply

The power supply must meet the specification on the unit's nameplate.

The supply voltage must be within the range specified in the electrical data table.

For connections, refer to the wiring diagrams and certified dimensional drawings.

WARNING:

Operation of the unit with an incorrect supply voltage or excessive phase imbalance constitutes misuse which will invalidate the manufacturer's warranty. If the phase imbalance exceeds 2% for voltage, or 10% for current, contact your local electricity supplier at once and ensure that the unit is not switched on until corrective measures have been taken.

After the unit has been started up, the power supply must only be disconnected for quick maintenance operations (one day maximum). For longer maintenance operations or when the unit is taken out of service, the power supply of the unit must be maintained permanently (the heaters must be powered on).

Specific data 30RQ/30RQP

Otherwise, the suction shut-off valves on each circuit must be closed.

6.2 - Voltage phase imbalance (%)

$$\frac{\text{100 x max. deviation from average voltage}}{\text{Average voltage}}$$

Example:

On a 400 V - 3 ph - 50 Hz supply, the individual phase voltages were measured with the following values:

AB = 406 V; BC = 399 V; AC = 394 V

Average voltage = (406 + 399 + 394)/3

= 1199/3

= 399.7 or 400 V

Calculate the maximum deviation from the 400 V average:

(AB) = 406 - 400 = 6

(BC) = 400 - 399 = 1

(CA) = 400 - 394 = 6

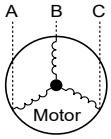

The maximum deviation from the average is 6 V. The greatest percentage deviation is: 100 x 6/400 = 1.5%

This is less than the permissible 2% and is therefore acceptable.

6.3 - Power connection/disconnect switch

The power connection of the unit is carried out at a single point upstream of the unit's disconnect switch.

6.4 - Recommended cable sections

Wire sizing is the responsibility of the installer, and depends on the characteristics and regulations applicable to each installation site. The following is only to be used as a guideline, and does not make the manufacturer in any way liable.

After wire sizing has been completed, using the certified dimensional drawing, the installer must verify the appropriate means of connection and define any modifications necessary on site.

The connections provided as standard for the customer-supplied power supply cables are designed for the number and type of cables listed in the table below.

The calculations of favourable and unfavourable cases are performed by using the maximum current possible for each unit fitted with a hydraulic module (see the tables of electrical data for the unit and the hydraulic module).

The study includes the standardised installation cases according to IEC 60364: Cables with PVC (70 °C) or XLPE (90 °C) insulation with copper core; routing in accordance with table 52C of the standard.

The maximum length mentioned is calculated to limit the voltage drop to 5%.

IMPORTANT:

Before connecting the main power cables (L1 - L2 - L3), always check 3 phases are in the correct order (clockwise) before proceeding to the connection on the main disconnect switch.

Table of minimum and maximum cable sections (per phase) for connection to the units

30RB-RBP	Max. connectable section(1)			Calculation of favourable case: No. 13 Perforated horizontal raceway or no. 17 self-supporting cable - PR (90 °C) - 45 °C			Calculation of unfavourable case: No. 41 Closed conduit - PR (90 °C) - 45 °C		
	Tightening torque	Terminal connection hole (4)	Recommended max. lug width	Section(2)	Max. length for a voltage drop < 5%	Cable type(3)	Section(2)	Max. length for a voltage drop < 5%	Cable type(3)
	Nm		mm	qty x mm² (per phase)	m	-	qty x mm² (per phase)		-
Standard unit									
170R	15	M8	25	1x50	180	90 °C Cu	2x25	190	90 °C or 70 °C
190R	15	M8	25	1x50	180	90 °C Cu	2x35	210	90 °C or 70 °C
210R	15	M8	25	1x70	190	90 °C Cu	2x35	210	90 °C or 70 °C
230R	15	M8	25	1x70	190	90 °C Cu	2x50	240	90 °C or 70 °C
270R	15	M8	25	2x35	170	90 °C Cu	2x70	260	90 °C or 70 °C
310R	50	M10	32	2x50	190	90 °C Cu	2x70	260	90 °C or 70 °C
340R	50	M10	32	2x50	190	90 °C Cu	2x70	260	90 °C or 70 °C
380R	50	M10	32	2x70	200	90 °C Cu	2x95	270	90 °C or 70 °C
410R	50	M10	32	2x70	200	90 °C Cu	2x95	270	90 °C or 70 °C
450R	50	M10	32	2x70	200	90 °C Cu	2x120	290	90 °C or 70 °C
480R	50	M10	32	2x95	210	90 °C Cu	2x120	290	90 °C or 70 °C
550R	50	M10	32	2x95	210	90 °C Cu	2x150	300	90 °C or 70 °C
610R	50	M10	32	2x120	220	90 °C Cu	2x185	310	90 °C or 70 °C
670R	50	M10	32	2x150	220	90 °C Cu	2x240	320	90 °C or 70 °C
720R	50	M10	32	2x150	230	90 °C Cu	2x240	320	90 °C or 70 °C
770R	50	M10	32	2x185	240	90 °C Cu	4x120	300	90 °C or 70 °C
800R	50	M10	32	2x185	240	90 °C Cu	4x150	310	90 °C or 70 °C
870R	50	M10	32	2x240	240	90 °C Cu	4x150	310	90 °C or 70 °C
950R	50	M10	32	2x240	240	90 °C Cu	4x185	300	90 °C or 70 °C

30RQ-RQP	Max. connectable section(1)			Calculation of favourable case: No. 13 Perforated horizontal raceway or no. 17 self-supporting cable - PR (90 °C) - 45 °C			Calculation of unfavourable case: No. 41 Closed conduit - PR (90 °C) - 45 °C		
	Tightening torque	Terminal connection hole (4)	Recommended max. lug width	Section(2)	Max. length for a voltage drop < 5%	Cable type(3)	Section(2)	Max. length for a voltage drop < 5%	Cable type(3)
	Nm		mm	qty x mm² (per phase)	m	-	qty x mm² (per phase)		-
Standard unit									
165R	15	M8	25	1x50	180	90 °C Cu	2x25	190	90 °C or 70 °C
180R	15	M8	25	1x50	180	90 °C Cu	2x35	210	90 °C or 70 °C
210R	15	M8	25	1x70	190	90 °C Cu	2x35	210	90 °C or 70 °C
230R	15	M8	25	1x70	190	90 °C Cu	2x50	240	90 °C or 70 °C
270R	15	M8	25	2x35	170	90 °C Cu	2x70	260	90 °C or 70 °C
310R	50	M10	32	2x50	190	90 °C Cu	2x70	260	90 °C or 70 °C
330R	50	M10	32	2x50	190	90 °C Cu	2x70	260	90 °C or 70 °C
370R	50	M10	32	2x70	200	90 °C Cu	2x95	270	90 °C or 70 °C
400R	50	M10	32	2x70	200	90 °C Cu	2x95	270	90 °C or 70 °C
430R	50	M10	32	2x70	200	90 °C Cu	2x120	290	90 °C or 70 °C
470R	50	M10	32	2x95	210	90 °C Cu	2x120	290	90 °C or 70 °C
520R	50	M10	32	2x95	210	90 °C Cu	2x150	300	90 °C or 70 °C
570R	50	M10	32	2x120	220	90°C Cu	2x185	310	90 °C or 70 °C
610R	50	M10	32	2x150	220	90°C Cu	2x240	320	90 °C or 70 °C
680R	50	M10	32	2x150	230	90°C Cu	2x240	320	90 °C or 70 °C
740R(a)	50 / 50	M10 / M10	32 / 32	2x70 / 2x70	200 / 200	90 °C Cu	2x95 / 2x95	270 / 270	90 °C or 70 °C
800R(a)	50 / 50	M10 / M10	32 / 32	2x70 / 2x70	200 / 200	90 °C Cu	2x95 / 2x95	270 / 270	90 °C or 70 °C
860R(a)	50 / 50	M10 / M10	32 / 32	2x70 / 2x70	200 / 200	90 °C Cu	2x120 / 2x120	290 /290	90 °C or 70 °C
940R(a)	50 / 50	M10 / M10	32 / 32	2x95 / 2x95	210 / 210	90 °C Cu	2x120 / 2x120	290 /290	90 °C or 70 °C
1040R(a)	50 / 50	M10 / M10	32 / 32	2x95 / 2x95	210 / 210	90 °C Cu	2x150 / 2x150	300 / 300	90 °C or 70 °C

(1) Connection capacities actually available for each machine. These are defined according to the connection terminal size, the electrical box access opening dimensions, and the available space inside the electrical box.
(2) Selection simulation result considering the hypotheses indicated.
(3) If the maximum calculated selection is for a 90°C cable type, this means that a selection based on a 70°C cable type can exceed the connection capacity actually available. Special attention must be given to selection.
The protection against direct contact at the electrical connection point is compatible with the addition of fanout cables. The installer must determine whether these are necessary based on the cable sizing calculation.
(4) The screws (each phase) are supplied by the factory.
(a) 30RQ/30RQP units from 620R to 1040R have two power connection points.
Note: The currents considered are given for a machine fitted with a hydraulic module operating at the maximum current.

6.5 - Power cable access routing

The power cables for devices are routed into the electrical box from the side of the electrical cabinet.

A removable aluminium plate on the side of the electrical cabinet provides access for the power cables.

It is important to check that the power cable bend radius is compatible with the connection space available inside the electrical cabinet.

Refer to the certified dimensional drawing for the unit.

6.6 - Field-installed control wiring

IMPORTANT:

Connecting the interface circuits on-site creates certain safety risks; any modification to the electrical box must ensure the equipment remains compliant with local regulations. In particular, precautions must be taken to prevent accidental electrical contact between the circuits supplied by different sources:

- ***The choice of routing and/or insulation characteristics of the conductors ensures double electrical insulation.***
- ***The conductors should be fixed together inside the electrical box to prevent contact between the end of the conductor and a live part in case of accidental disconnection.***

See the control manual and the certified electric wiring diagram supplied with the unit for the field control wiring of the following devices:

- ***Remote On/Off switch***
- ***Setpoint 1/Setpoint 2 switching,***
- ***Remote heating/cooling switch***
- ***Power limitation switch,***
- ***Locking switch (safety chain),***
- ***Switch activation, partial heat recovery, (option 49 Desuperheater)***
- ***Setpoint adjustable by 4-20 mA signal,***
- ***Operating indicator***
- ***Fault and alert indicator***
- ***Customer pump switch control (on/off),***
- ***Variable speed pump control (0-10 V)***
- ***Time schedule override, (option 156 EMM)***
- ***User fault reporting, (option 156 EMM)***
- ***Second power limitation level switch, (option 156 EMM)***
- ***End of storage cycle signal, (option 156 EMM)***
- ***Power limitation control adjustable by 4-20 mA, (option 156 EMM)***
- ***Unit shutdown general fault reporting, (CO/HP), (option 156 EMM)***
- ***Minor alert signalling, (option 156 EMM)***
- ***Partial heat recovery pump On/Off control, (option 156 EMM & 49 Desuperheater)***
- ***Boiler control (option 156 EMM)***
- ***Power indication on analogue output (0-10 V), (option 156 EMM)***
- ***Specific data RQ/RQP: Electric heater control (option 156 EMM)***

6.7 - Electric power reserve for the user

Control circuit power reserve:

After all possible options have been connected, the CT transformer ensures the availability of 1 A of power for the control cabling on-site on 24 V, 50 Hz.

With the electrical plug option, this CT transformer provides a 230 V, 50 Hz circuit to power laptop battery chargers only, maximum current of 0.8 A at 230 V

IMPORTANT:

Only connect class I and II equipment to this power socket.

7.1 - Operating range

7.1.1 - 30RB/RBP 170R-950R units

Water-cooled heat exchanger		Minimum	Maximum
Water inlet temperature at start-up	°C	8(1)	40
Water outlet temperature during operation	°C	5(2)	20(3)
Air-cooled exchanger		**Minimum**	**Maximum**
Outdoor ambient operating temperature			
30RB units	°C	0(4)	52(5)
30RBP units	°C	-20(4)	52(5)
Available static pressure			
Standard units	Pa	0	0
Units + Option 12 (high pressure static fan)	Pa	200	200

(1) For an application requiring start-up at less than 8 °C, contact the manufacturer to select a unit using the electronic catalogue.
(2) The use of antifreeze is mandatory if the water outlet temperature is below 5 °C.
(3) For applications requiring operation above a water outlet temperature of 20 °C, contact the manufacturer to select a unit using the electronic catalogue.
(4) For operation at an ambient temperature below 0 °C, the unit must be equipped with the water exchanger frost protection option (for units without hydraulic module option) or the water exchanger and hydraulic module frost protection option (for units with hydraulic module option) or the water loop must be protected against frost by the installer, using an antifreeze solution.
(5) Part load operation permitted above an outdoor temperature of 48 °C. Contact the manufacturer to select a unit using the electronic catalogue.
Ambient temperatures during shutdown: The storage and transportation of 30RB/RBP units must be carried out at ambient temperatures between -20 °C and +51 °C. These temperature limits shall be considered in case of container shipment.

Operating range - Standard unit 30RB/RBP 170R-950R

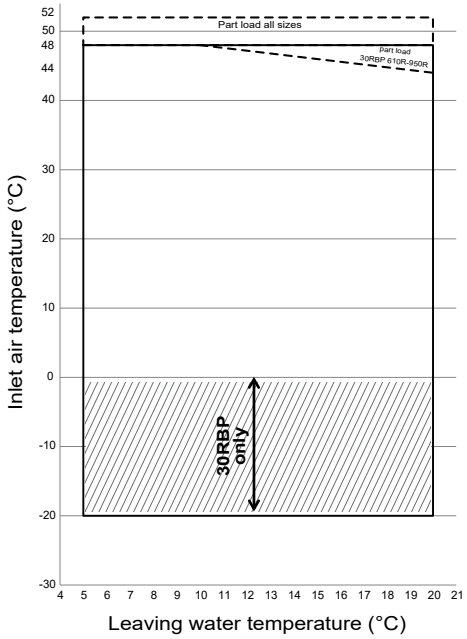

Operating range - Unit option 15LS/15LS+ 30RB/RBP 170R-950R option 15LS/15LS+

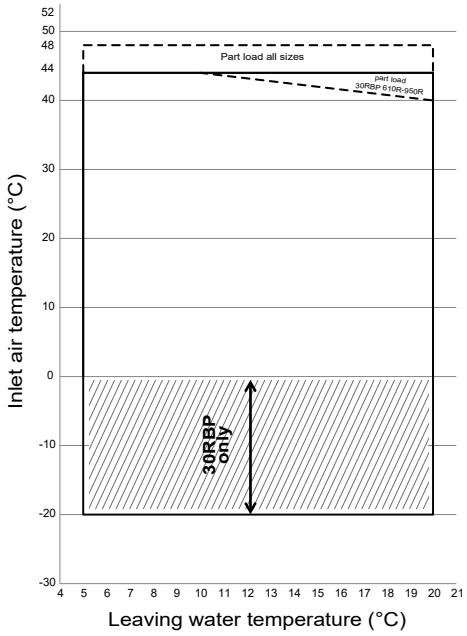

Key:

Operating range at full load

Extension of the operating range, 30RBP unit: Frost protection required (see note 2).

Operating range of units at part load.

Notes:
1. **Water type heat exchanger ΔT = 5K.**
2. **The hydraulic module and/or water type heat exchanger must be protected against frost (option 41 or 42A or 42B) or the loop must be protected by an antifreeze solution for outdoor temperatures < 0 °C.**
3. **These ranges are guidelines only. Verify the operating range with the electronic catalogue.**

7.1.2 - 0RQ/RQP 165R-1040R units

Cooling mode

Water-cooled heat exchanger		Minimum	Maximum
Water inlet temperature at start-up	°C	8(1)	40
Water outlet temperature during operation	°C	5	20(2)
Air-cooled exchanger		**Minimum**	**Maximum**
Outdoor ambient operating temperature			
30RQ units	°C	0(3)	52(4)
30RQP units	°C	-20(3)	52(4)
Available static pressure			
Standard units	Pa	0	0
Units + Option 12 (high pressure static fan)	Pa	200	200

Heating mode

Water-cooled heat exchanger		Minimum	Maximum
Water inlet temperature at start-up	°C	8(1)	50
Water outlet temperature during operation	°C	20	55
Air-cooled exchanger		**Minimum**	**Maximum**
Outdoor ambient operating temperature			
Outdoor ambient temperature at start-up	°C	-15(3)(4)	35
Available static pressure			
Standard units	Pa	0	0
Units + Option 12 (high pressure static fan)	Pa	200	200

(1) For an application requiring start-up at less than 8 °C, contact the manufacturer to select a unit using the electronic catalogue.
(2) For applications requiring operation above a water outlet temperature of 20 °C, contact the manufacturer to select a unit using the electronic catalogue.
(3) For operation at an ambient temperature below 0 °C, the unit must be equipped with the water exchanger frost protection option (for units without hydraulic module) or the hydraulic module and water exchanger frost protection option (for units with hydraulic module) or the water loop must be protected against frost by the installer with an antifreeze solution.
(4) Part load operation permitted below an outdoor temperature of -10 °C and above 46 °C. Contact the manufacturer to select a unit using the electronic catalogue.
Ambient temperatures during shutdown: The storage and transportation of 30RB/RBP and 30RQ/RQP units must be carried out at ambient temperatures between -20 °C and +51 °C. These temperature limits shall be considered in case of container shipment.

Operating range - Standard unit cooling mode 30RQ-RQP 165R-1040R

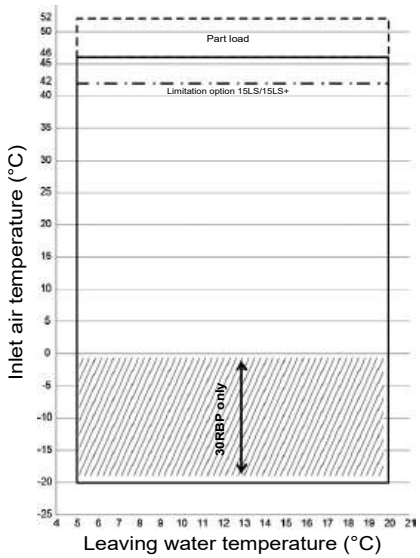

Operating range - Standard unit heating mode 30RQ-RQP 165R-1040R

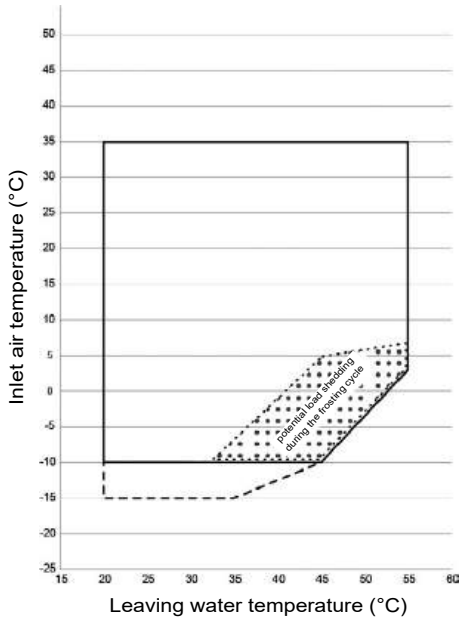

Notes:
1. **Water type heat exchanger ΔT = 5K.**
2. **The hydraulic module and/or water type heat exchanger must be protected against frost (option 41 or 42A or 42B) or the loop must be protected by an antifreeze solution for outdoor temperatures < 0 °C.**
3. **The heat pump must be equipped with a coil defrost and condensate evacuation kit (option 252) for outdoor temperatures < 0 °C.**
4. **These ranges are guidelines only. Verify the operating range with the electronic catalogue.**

Key:

- Operating range at full load
- Extension of the operating range, 30RQP unit: Frost protection required (see note 2).
- Potential load shedding before defrosting during the frosting cycle, depending on the humidity conditions. Please refer to the selection in the electronic catalogue.
- Heating mode: part load at inlet air temperature between -10 and -15 °C. Cooling mode: Part load above an inlet air temperature of 46 °C.
- Inlet air temperature limitation at 42 °C for units with option 15LS/15LS+.

NOTE:

Units equipped with variable speed drives (30RBP or 30RQP or option 116V/116W)

If the air temperature is below -10 °C and the unit has been de-energised for more than 4 hours, it is necessary to wait two hours after the unit has been switched on again to allow the variable drive to warm up.

7.2 - Minimum energy transfer fluid flow rate (units without factory-fitted hydraulic module)

The minimum heat transfer fluid flow rate for different unit sizes is given in the tables in paragraph “Water type heat exchanger flow rate”.

It is determined in order to allow sufficient exchange and prevent the risk of excessive fouling.

If the system flow rate is less than the unit's minimum flow rate, the exchanger flow can be recirculated, as shown in the diagram.

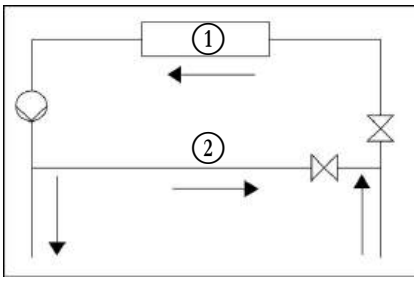

Key
1 Water type heat exchanger
2 Recirculation

7.3 - Maximum energy transfer fluid flow rate (units without factory-fitted hydraulic module)

The maximum heat transfer fluid flow rate for different unit sizes is given in the tables in paragraph “Water type heat exchanger flow rate”.

This is limited by the permitted exchanger pressure drop. In addition, there must be a minimum Delta T of 2.8 K, which corresponds to a flow rate of 0.09 l/s per kW.

If the system flow rate exceeds the unit's maximum value, it can be bypassed as shown in the diagram.

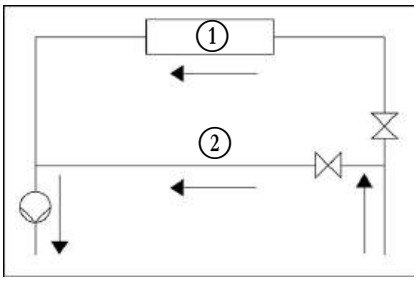

Key
1 Water type heat exchanger
2 Bypass

7.4 - Variable flow water type heat exchanger (units without factory-fitted hydraulic module)

A variable water heat exchanger flow can be used in standard units. The flow rate must be higher than the minimum flow given in the table of permissible flow rates and must not vary by more than 10% per minute.

If the flow rate changes more rapidly, the system's water volume should be increased and reach a value of at least 6.5 litres of water per kW.

7.5 - Minimum system water volume

Whichever system, water volume for the water loop (to be provided between the unit and any customer valves outside the machine) is given by the formula

Volume = Cap (kW) x N litres

Application	N
Air conditioning – cooling	2,5
Air conditioning – heating	3,0 - 8,0(1)
Industrial process type cooling	6,5

(1) Depending on the unit capacity - minimum water loop volume 1300 l

Where “Cap” represents the cooling or heating capacity (kW) under the installation's nominal operating conditions. This volume is necessary for stable operation. It may be necessary to add a buffer water tank to the circuit in order to achieve the minimum volume. The tank must itself be internally baffled in order to ensure proper mixing of the liquid (water or brine). Refer to the examples below.

Connection to a buffer tank

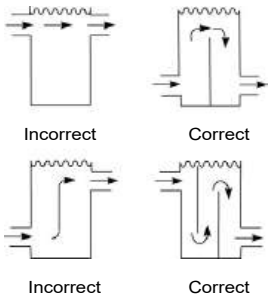

7.6 - Maximum system water volume

Units with a hydraulic module may include an expansion vessel which limits the volume in the water loop.

The table below gives the maximum loop volume compatible with the expansion vessel (for pure water or ethylene glycol depending on the system's various concentrations and static pressures). If this volume is less than the volume of the installed loop, then it is necessary to add an extra expansion vessel within the system.

30RB/RBP or 30RQ/RQP		165R-270R			310R-1040R		
Static pressure	bar	1	2	2,5	1	2	2,5
Pure water	l	2400	1600	1200	3960	2640	1980
10% EG	l	1800	1200	900	2940	1960	1470
20% EG	l	1320	880	660	2100	1400	1050
30% EG	l	1080	720	540	1740	1160	870
40% EG	l	900	600	450	1500	1000	750

EG: Ethylene Glycol

7.7 - Water type heat exchanger water flow rate

Data applicable for pure water.

30RB/RBP 170R-950R units without hydraulic module

30RB-RBP	Minimum flow rate (l/s)(1)	Maximum flow rate(2)(l/s)
170R	2,7	17,5
190R	2,7	17,5
210R	3,3	17,5
230R	2,8	17,5
270R	3,4	21,8
310R	2,8	29,8
340R	3,5	35,2
380R	3,3	33,8
410R	3,9	38,9
450R	4,2	40,4
480R	4,7	41,6
550R	5,2	43,4
610R	6,1	57,3
670R	5,8	57,3
720R	6,3	57,3
770R	6,0	62,7
800R	6,3	62,7
870R	5,8	62,7
950R	6,2	62,7

(1) Minimum flow rate for the plate heat exchanger normal operation. The maximum allowable water temperature difference (10K) may require a greater flow rate for full load operation
(2) Maximum flow rate for a pressure drop of 100 kPa in the plate heat exchanger

30RB/RBP 170R-950R units with low/high pressure hydraulic module

30RB-RBP	Minimum flow rate (l/s)(1)		Maximum flow rate (l/s)	
	Single	Dual	Single	Dual
170R	2,7	2,7	12,0/14,1	10,5/13,7
190R	2,7	2,7	12,0/14,1	10,5/13,7
210R	3,3	3,3	12,0/14,1	12,2/13,7
230R	2,8	2,8	12,0/14,1	12,2/13,7
270R	3,4	3,4	14,7/16,0	14,7/16,6
310R	2,8	2,8	19,3/17,5	19,1/18,5
340R	3,5	3,5	20,1/25,0	20,0/24,4
380R	3,3	3,3	19,9/24,8	19,8/24,1
410R	3,9	3,9	28,2/25,4	23,3/24,9
450R	4,2	4,2	28,8/28,5	27,8/28,2
480R	4,7	4,7	29,4/28,6	28,5/28,4
550R	5,2	5,2	27,0/28,8	27,0/33,7
610R	6,1	6,1	42,4	42,4
670R	5,8	5,8	42,4	42,4
720R	6,3	6,3	42,4	42,4
770R	6	6	50,4	50,4
800R	6,3	6,3	50,4	50,4
870R	5,8	5,8	50,4	50,4
950R	6,2	6,2	50,4	50,4

(1) Minimum flow rate for the plate heat exchanger normal operation. The maximum allowable water temperature difference (10K) may require a greater flow rate for full load operation

30RQ/RQP 165R-1040R units without hydraulic module

30RQ-RQP	Minimum flow rate (l/s)(1)	Maximum flow rate(2) (l/s)
165R	2,7	17,5
180R	2,7	17,5
210R	2,8	17,5
230R	3,4	21,8
270R	3,4	21,8
310R	3,5	35,2
330R	4,2	40,4
370R	4,2	40,4
400R	4,2	40,4
430R	4,2	40,4
470R	4,7	41,6
520R	5,2	43,4
570R	6,1	57,3
610R	5,8	62,7
680R	6,3	62,7
740R	8,4	80,8
800R	8,4	80,8
860R	8,4	80,8
940R	9,4	83,2
1040R	10,4	86,8

(1) Minimum flow rate for the plate heat exchanger normal operation. The maximum allowable water temperature difference (10K) may require a greater flow rate for full load operation
(2) Maximum flow rate for a pressure drop of 100 kPa in the plate heat exchanger

30RQ/RQP 165R-1040R units with high/low pressure hydraulic module

30RQ-RQP	Minimum flow rate (l/s)(1)		Maximum flow rate (l/s)	
	Single	Dual	Single	Dual
165R	2,7	2,7	12,0/14,1	10,5/13,7
180R	2,7	2,7	12,0/14,1	13,2/13,7
210R	2,8	2,8	13,6/15,2	13,9/15,6
230R	3,4	3,4	14,7/16,0	14,7/16,6
270R	3,4	3,4	14,7/16,0	14,7/16,6
310R	3,5	3,5	20,1/25,0	20,0/24,4
330R	4,2	4,2	28,8/25,5	27,8/25,0
370R	4,2	4,2	28,8/25,5	27,8/28,2
400R	4,2	4,2	28,8/25,5	27,8/28,2
430R	4,2	4,2	28,8/28,5	27,8/28,2
470R	4,7	4,7	29,7/28,6	26,8/33,3
520R	5,2	5,2	30,1/34,9	29,3/33,7
570R	6,1	6,1	42,4	42,4
610R	5,8	5,8	50,4	50,4
680R	6,3	6,3	50,4	50,4
740R	8,4	8,4	- / 51	- / 56,4
800R	8,4	8,4	- / 51	- / 56,4
860R	8,4	8,4	- / 51	- / 56,4
940R	9,4	9,4	- / 57,2	- / 66,6
1040R	10,4	10,4	- / 69,8	- / 67,4

(1) Minimum flow rate for the plate heat exchanger normal operation. The maximum allowable water temperature difference (10K) may require a greater flow rate for full load operation

7.8 - Pressure drop curves for the water type heat exchanger and standard water inlet/outlet piping

Data applicable for pure water at 20 °C.

30RB/30RBP 170R-380R units

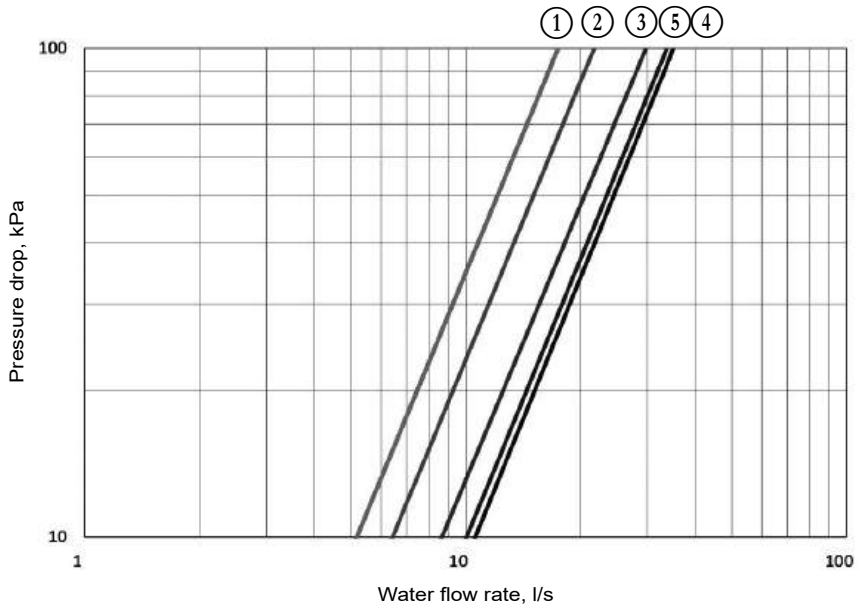

1 30RB-RBP 170R - 230R
2 30RB-RBP 270R
3 30RB-RBP 310R
4 30RB-RBP 340R
5 30RB-RBP 380R

30RB/30RBP 410R-950R units

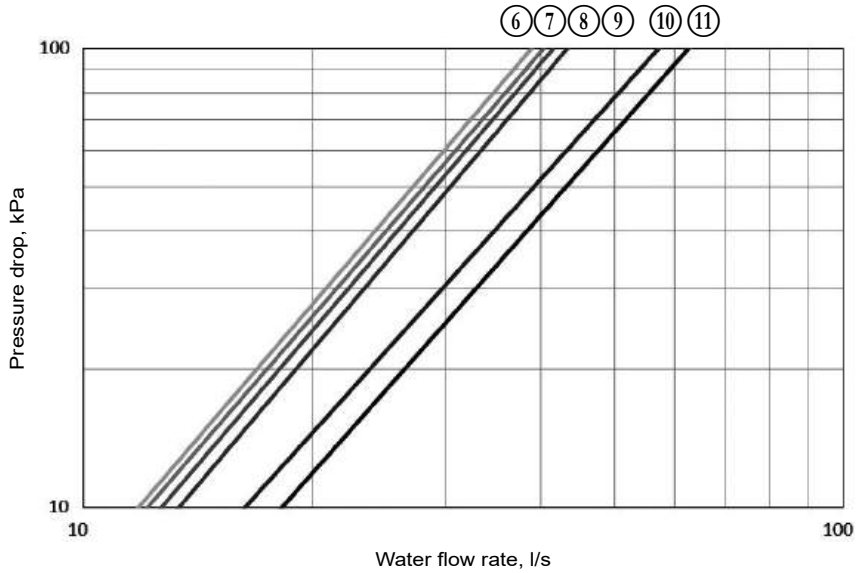

6 30RB-RBP 410R
7 30RB-RBP 450R
8 30RB-RBP 480R
9 30RB-RBP 550R
10 30RB-RBP 610R - 720R
11 30RB-RBP 770R - 950R

30RQ/30RQP 165R-370R units

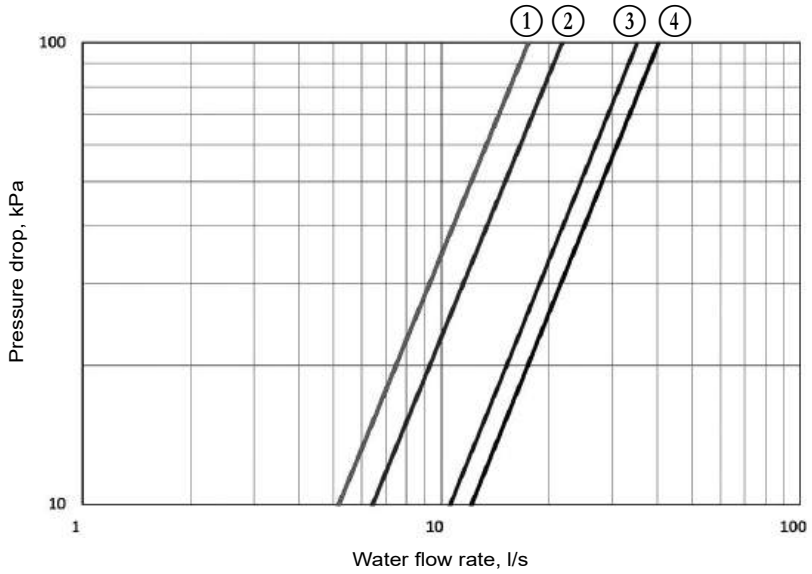

1 30R-RQP 165R - 210R
2 30RQ-RQP 230R - 270R
3 30RQ-RQP 310R - 330R
4 30RQ-RQP 370R

30RQ/30RQP 400R-520R units & 30RQP 570R - 680R

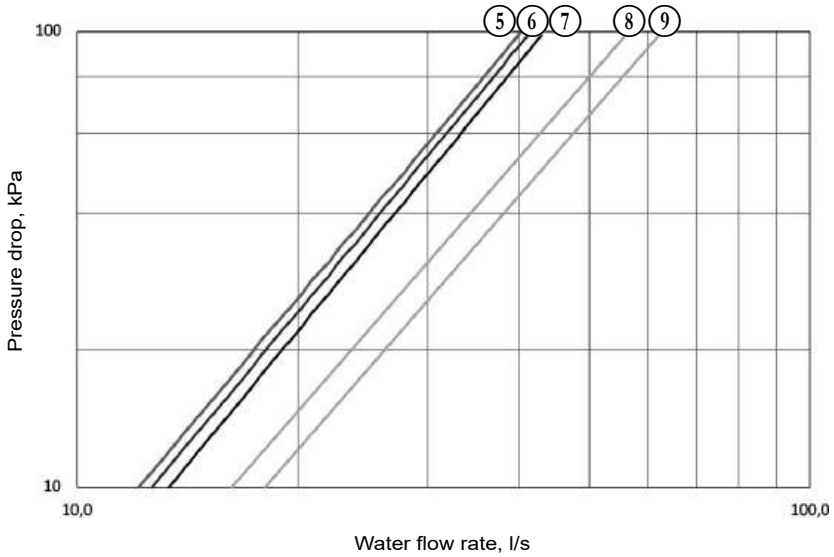

5 30RQ-RQP 400R - 430R
6 30RQ-RQP 470R
7 30RQ-RQP 520R
8 30RQP 570R
9 30RQP 610R-680R

30RQ/30RQP 740R-1040R units

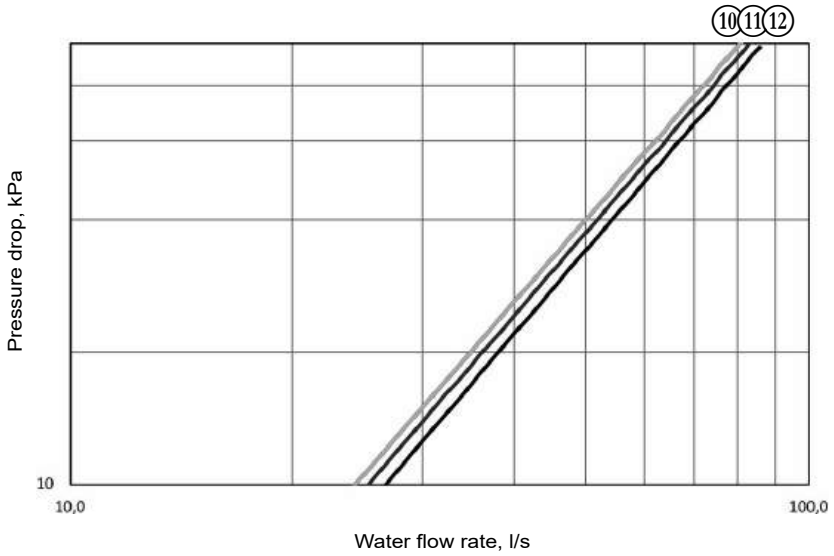

10 30RQP 740R - 860R
11 30RQP940R
12 30RQP 1040R

8 - WATER CONNECTIONS

When connecting units to the water distribution pipe work, refer to the certified dimensional drawings supplied with the unit for the dimensions and position of the water inlet and outlet connections.

If the Metallic Protection Grilles option is present with the Pump option, the grille must be cut in order to make the water connection. This operation is the responsibility of the installer.

The piping must not transmit any axial or radial force to the exchangers, or any vibrations.

The water must be analysed and the circuit must include the elements required for water treatment: filters, additives, intermediate exchangers, bleed valves, vents, shut-off valves, etc. depending on the results, in order to prevent corrosion (e.g. damage to the surface of the tubes due to impurities in the fluid), fouling and deterioration of the pump lining.

Before any start-up, check that the energy transfer fluid is compatible with the hydraulic circuit materials and coating. Where additives or fluids other than those recommended by the manufacturer are used, ensure that these are not considered gases, and that they are class 2, as defined in directive 2014/68/EU.

Manufacturer's recommendations concerning heat transfer fluids:

- SO_4^{2-} sulphate ions can cause perforating corrosion, if their content is above 30 mg/l.
- Cl^- Chloride ions are also harmful to copper with a risk of perforating corrosion. Keep at a level below 25 mg/l. Regarding the desuperheater options, the level of chloride ions (Cl^-) must be kept below 10 mg/l.
- No fluoride ions (< 0.1 mg/l).
- No Fe^{2+} and Fe^{3+} ions with non-negligible levels of dissolved oxygen must be present. Dissolved iron < 5 mg/l with dissolved oxygen < 5 mg/l.
- Dissolved silicon: silicon is an acid element of water and can also lead to corrosion risks. Content < 1 mg/l.
- Water hardness: >0.5 mmol/l. Values between 1 and 2.5 are recommended. This will facilitate scale deposit that can limit corrosion. Values that are too high can cause piping blockage over time. A total alkalimetric titre (TAC) below 100 mg/l is desirable.
- Dissolved oxygen: avoid any sudden change in water oxygenation conditions. It is as detrimental to deoxygenate the water by mixing it with inert gas as it is to over-oxygenate it by mixing it with pure oxygen. The disturbance of the oxygenation conditions encourages destabilisation of copper hydroxides and enlargement of particles.
- Electric conductivity 10-600 µS/cm.
- pH: Ideal case pH neutral at 20-25 °C (7.5 < pH < 9).

IMPORTANT: Filling, topping up or emptying of the water circuit must be carried out by qualified personnel using the air bleed devices and tools and equipment suitable for the products.

The heat transfer fluid should be filled and drained using devices fitted to the hydraulic circuit by the installer. Never use the unit heat exchangers to add heat transfer fluid.

8.1 - Operating precautions and recommendations

Before commissioning, check that the hydraulic circuits are connected to the appropriate heat exchangers.

The water circuit must have as few bends and horizontal sections at different levels as possible,

Main points to be checked for the connection:

- Make sure that the stainless steel water filter is in the screen filter. See figure 2.
- Comply with the water inlet and outlet connections shown on the unit.
- Install manual or automatic vents at all high points in the circuit.
- Maintain the pressure in the circuit(s) with a pressure-reducing valve and install a relief valve and an expansion tank. Units supplied with a hydraulic module include a valve. The expansion vessel is supplied as an option.
- Install thermometers in both the water inlet and outlet pipes.
- Install drain connections at all low points to allow the whole circuit to be drained.
- Install shut-off valves close to the water inlet and outlet connections.
- Use flexible connections to reduce the transmission of vibrations.
- Insulate the cold water pipework, after testing for leaks, to prevent heat transmission and condensation.
- Cover the insulation with a vapour barrier. If the water pipes outside the unit pass through an area where the ambient temperature is likely to fall below 0°C, it must be protected against frost (antifreeze solution or electric heaters)
- Do not introduce any significant static or dynamic pressure into the heat exchange circuit (with regard to the design operating pressures).
- The use of different metals in the hydraulic system may create galvanic couples and lead to corrosion. Verify the need to install sacrificial anodes.
- Products used for thermal insulation of recipients during hydraulic connections must be chemically neutral to the materials and coatings on which they are applied. All original materials supplied by the manufacturer comply with this requirement.

Note:

A screen filter must be installed for units supplied without a hydraulic module. This must be installed on the water inlet pipe, upstream of the pressure differential gauge and close to the unit heat exchanger. It must be located somewhere easily accessible to enable disassembly and cleaning.

The mesh size of the filter must be no more than 1.2 mm.

If the filter is missing, the plate heat exchanger can quickly become fouled during the first start-up, as it will trap any debris in the system, and correct unit operation will be affected (reduced water flow rate due to the increased pressure drop).

Units with a hydraulic module are equipped with this type of filter.

A filter with a mesh opening size of 0.8 mm must be installed at the heat recovery option exchanger intake.

8.2 - Hydraulic connections

The hydraulic module options are only compatible with closed loops.
The use of the hydraulic module on open systems is prohibited.

Typical hydraulic circuit diagram without hydraulic module

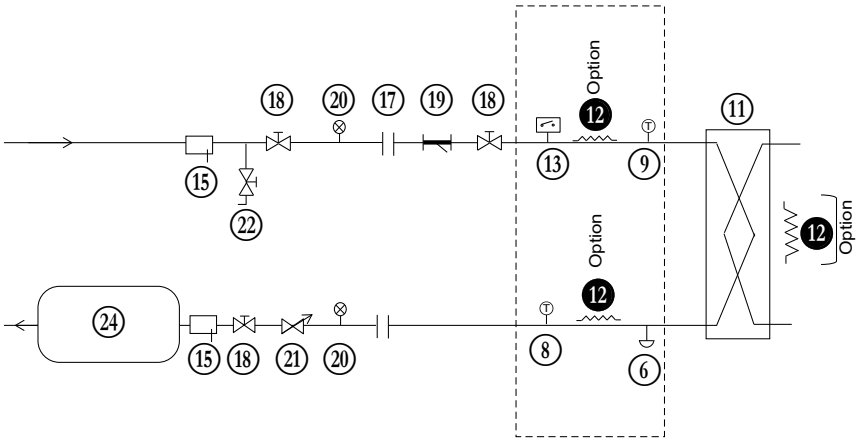

Typical hydraulic circuit diagram with hydraulic module

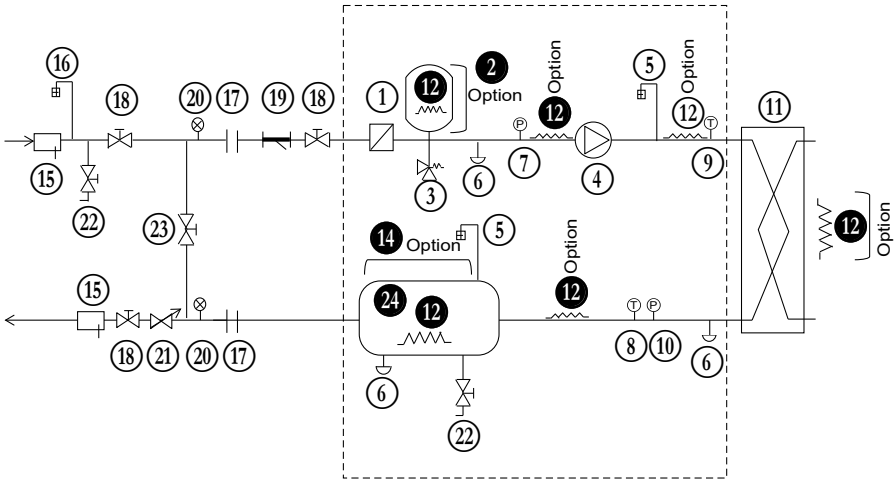

Key

Components of the hydraulic module and the unit

1. Screen filter (particle size of 1.2 mm)
2. Expansion tank (option)
3. Relief valve
4. Circulating pump (single or dual)
5. Air vent
6. Water drain tap
7. Pressure sensor
   Note: Provides pressure information for the pump inlet (see Control manual)
8. Temperature sensor
   Note: Provides temperature information for the water exchanger outlet (see Control manual)
9. Temperature sensor
   Note: Provides temperature information for the water type heat exchanger inlet (see Control manual)
10. Pressure sensor
    Note: Provides pressure information for the water exchanger outlet (see Control manual)
11. Plate heat exchanger
12. Heater or heat trace cable for frost protection (Option)
13. Water type heat exchanger flow rate sensor
14. Water buffer tank module (Option)

Installation components

15. Pocket
16. Air vent
17. Flexible connection
18. Shut-off valve
19. 800 µm screen filter (mandatory for a unit without a hydraulic module)
20. Pressure gauge
21. Water flow control valve
    Note: Not required if hydraulic module with variable-speed pump
22. Charging valve
23. Bypass valve for frost protection (if shut-off valves are closed (item 18) during winter)
24. Buffer tank (if required)

---- Hydraulic module (unit with hydraulic module option)

Notes:

- **The installation must be protected against frost.**
- **The unit's hydraulic module and the water type heat exchanger may be protected (factory-fitted option) against frost using electric heaters and heat trace cables (12)**
- **The pressure sensors are assembled on connections without Schrader. Depressurise and drain the system before any work.**

Figure 1: Water connections without hydraulic module

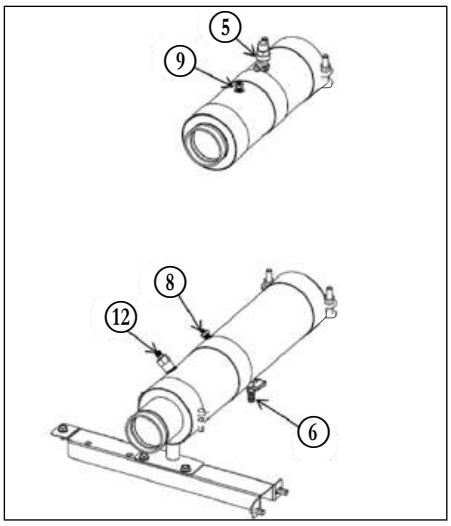

Example: Dual-pump

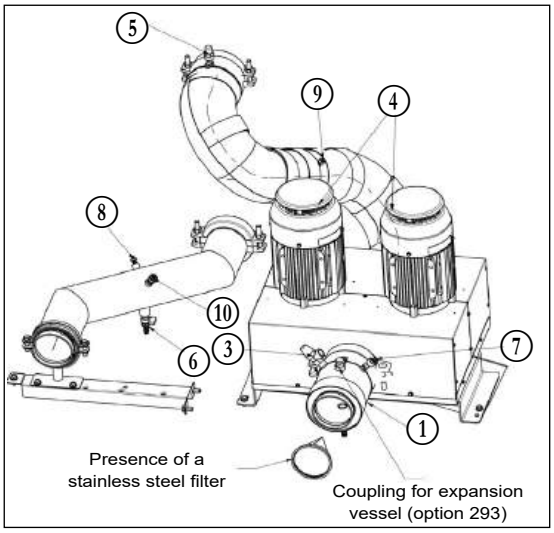

Figure 2: Hydraulic connections with hydraulic module

Example: Single-pump

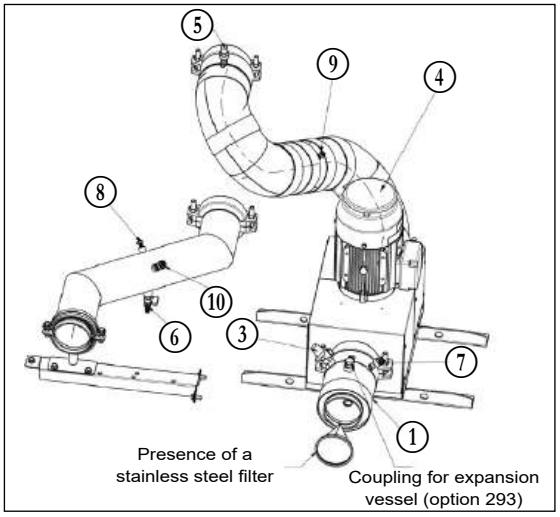

Figure 3: Hydraulic connections with hydraulic module and with water buffer tank module option

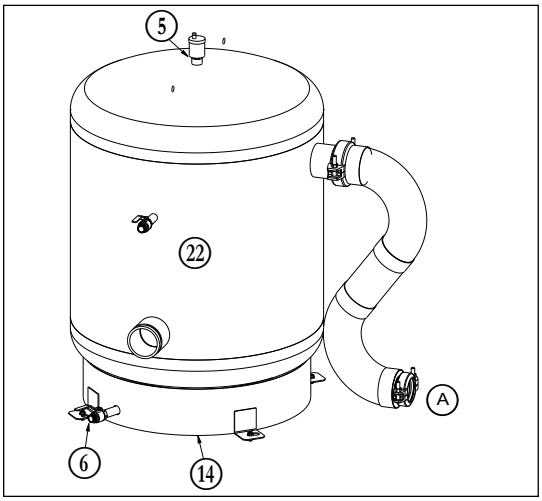

Key

Components of the hydraulic module and the unit

1. Screen filter (particle size of 1.2 mm)
2. Expansion tank (option)
3. Relief valve
4. Circulating pump (single or dual)
5. Air vent
6. Water drain tap
7. Pressure sensor
   Note: Provides pressure information for the pump inlet (see Control manual)
8. Temperature sensor
   Note: Provides temperature information for the water exchanger outlet (see Control manual)
9. Temperature sensor
   Note: Provides temperature information for the water type heat exchanger inlet (see Control manual)
10. Pressure sensor
    Note: Provides pressure information for the water exchanger outlet (see Control manual)
11. Plate heat exchanger
12. Heater or heat trace cable for frost protection (Option)
13. Water type heat exchanger flow rate sensor
14. Water buffer tank module (Option)

Installation components

15. Pocket
16. Air vent
17. Flexible connection
18. Shut-off valve
19. 800 µm screen filter (mandatory for a unit without a hydraulic module)
20. Pressure gauge
21. Water flow control valve
    Note: Not required if hydraulic module with variable-speed pump
22. Charging valve
23. Bypass valve for frost protection (if shut-off valves are closed (item 18) during winter)

---- Hydraulic module (unit with hydraulic module option)

Notes:

- **The installation must be protected against frost.**
- **The unit's hydraulic module and the water type heat exchanger may be protected (factory-fitted option) against frost using electric heaters and heat trace cables (12)**
- **The pressure sensors are assembled on connections without Schrader. Depressurise and drain the system before any work.**

8.3 - Hydraulic connections for 30RQP 620R-1040R units

30RQP 620R – 1040R units are delivered as two separate modules. Two water temperature sensors (one per module) and a CCN communication bus in the control panel of one of the two modules) are provided.

For optimal operation, we recommend installing the two modules in accordance with the hydraulic diagrams below. The two machines must be connected in parallel, and the stated performance has been achieved in accordance with this hydraulic installation.

The customer must connect both units via the communication bus. The Lead and Lag modules must be configured and addressed in the Service configuration menu (refer to the control manual for more details).

We recommend positioning the temperature sensors as shown in the diagrams below to ensure optimal control of the water outlet temperature.

The temperature sensors must be positioned in an area supplied with water, irrespective of the conditions, to ensure correct control of the water loop.

Standard unit without hydraulic pump kit

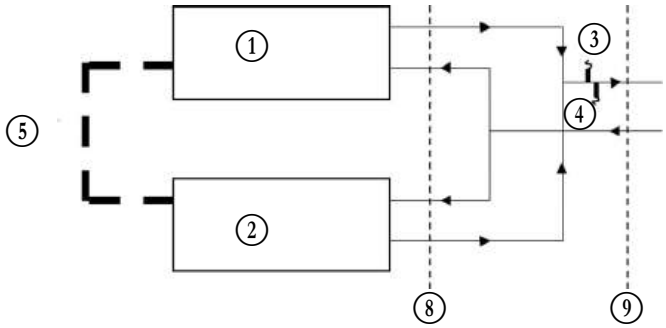

Standard unit with hydraulic pump kit

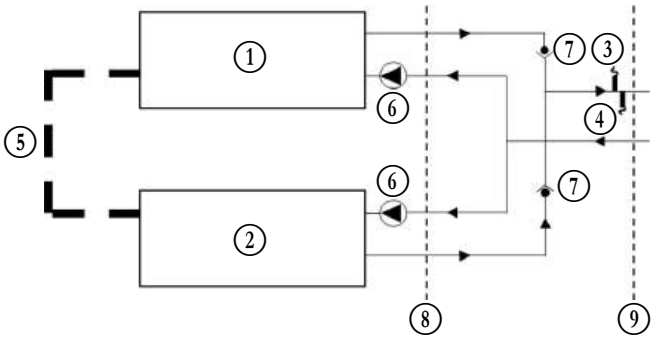

Key:

1. Module 1
2. Module 2
3. Module 1 water outlet temperature sensor
4. Module 2 water outlet temperature sensor
5. Communication module between the 2 modules (provided)
6. Hydraulic pump kit (116V / 116W option)
7. Check valve
8. Border between the unit and the installation WITHOUT water collection vessel (without option 325)
9. Border between the unit and the installation WITH water collection vessel (with option 325)

Notes: For the hydraulic installation, we recommend following the manufacturer's guidelines (see section 8.1 Precautions and recommendations for use)

Hydraulic manifold (option 325A):

The hydraulic manifold option is used to facilitate hydraulic connection of the two modules. It provides a single connection point for the water inlet and outlet .

Two compensators are provided with the hydraulic manifold. They enable the two modules to be connected and absorb any installation deviations. The customer must install these compensators when the two modules are installed.

Option 325A without 116V / W option

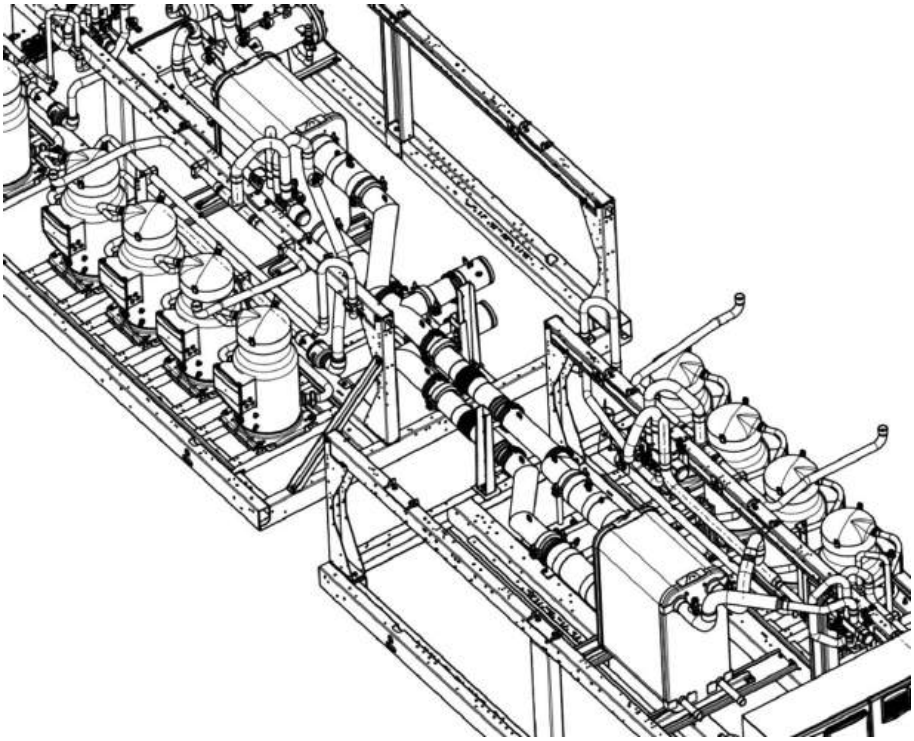

Option 325A with 116V / W option

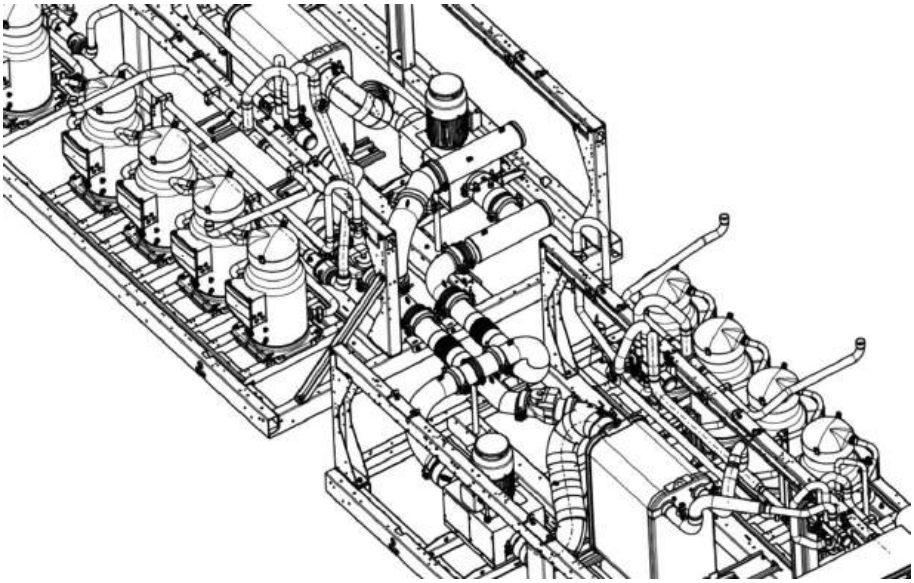

Notes:

- **To allow the compensators to be installed, the position of the two modules and the distance between each module must conform to the certified dimensional drawings.**
- **The frost protection option (option 41D) provides thermal insulation for the hydraulic manifold water pipes and the frost protection.**

8.4 - Flow rate detection

Standard unit

All units are equipped as standard with a factory-set flow switch. It cannot be adjusted on site.

The energy transfer fluid pump must be servo-controlled by the unit: dedicated terminals are provided for installing the energy transfer fluid pump servo control (auxiliary operation switch of the pump to be wired on site).

Unit with hydraulic module option

The “flow rate detection” functionality is handled by the option via the pressure sensors.

8.5 - Cavitation protection (with hydraulic module option)

To ensure the durability of pumps fitted on the built-in hydraulic modules, the control algorithm of units in the range includes cavitation protection.

It is therefore necessary to ensure a minimum pressure of 60 kPa (0.6 bar) at the pump inlet both when shut down and during operation.

A pressure below 60 kPa will prevent unit start-up, or will cause an alarm and shut-down.

A pressure below 100 kPa will trigger an alert on the user interface.

To obtain an adequate pressure, it is recommended:

- To pressurise the hydraulic circuit between 100 kPa (1 bar) and 400 kPa (4 bar) maximum at the pump inlet;
- To clean the hydraulic circuit during water filling or after any modifications are made;
- To regularly clean the screen filter.

8.6 - Additional electrical heaters

Specific data 30RQ/30RQP

To compensate for the decrease in the heat pump's output at low ambient temperatures, which changes significantly as shown in the graph below, it is possible to install additional electric heaters on the unit's water outlet.

These heaters (not supplied) can be controlled via option 156.

Four outputs are available to control the switches (not supplied) on the heaters, allowing gradual compensation of the heat pump output reduction.

These outputs can be configured to obtain two, three or four stages (as required), the last stage only being activated in the event of a default shut-down of the heat pump (safety).

Example of additional heaters

In the graph, the power of the four heaters equals the capacity of the heat pump at an outdoor air temperature of 7 °C.

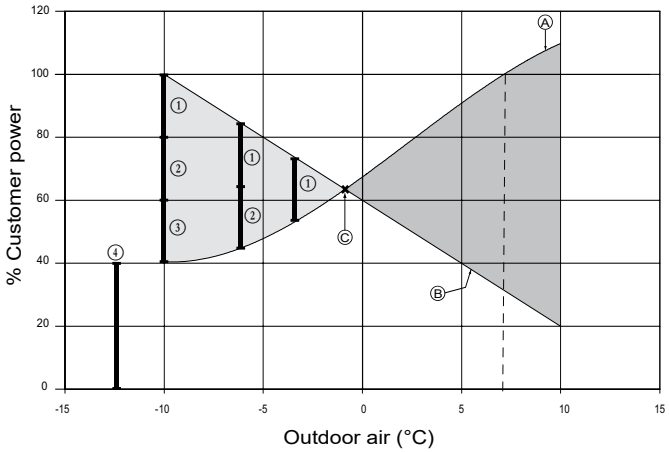

Operating range for which the heat pump output is less than the building heat load

Operating range for which the heat pump output is greater than the building heat load

1 Stage 1

2 Stage 2

3 Stage 3

4 Stage 4 (safety)

A Variation of the heat pump output with air temperature

B Building heat load

C Equilibrium point between the heat pump output and the building heat load

8.7 - Frost protection

IMPORTANT: Damage caused by frost is not covered by the warranty.

The plate heat exchanger, the pipes and the hydraulic module pump(s) can be damaged by frost. The components of the unit (heat exchanger, pipes, hydraulic module) are protected by following the recommendations below. Protection of the remainder of the system is the responsibility of the installer.

The plate heat exchanger and all the components of the hydraulic circuit can be protected against freezing by draining the entire machine completely, checking that there are no retention points.

If this is not possible, the plate heat exchanger and all the components of the water circuit can be protected against freezing:

- Down to -20°C by heaters and heat trace cables (fitted as an option on the exchanger and internal pipe system) supplied automatically (for units without the hydraulic module)
- Down to -20°C by heaters and heat trace cables (fitted as an option on the water type heat exchanger and internal pipe system) supplied automatically and pump on/off activation (for units with hydraulic module)

Never power off the heaters for the water type heat exchanger and the hydraulic circuit or pump, as they will no longer be providing frost protection.

To ensure they continue to receive power, the main disconnect switch for the unit or the customer's circuit and the auxiliary circuit breaker for the heaters must be left closed (see the wiring diagram for the location of these components).

To protect units with a hydraulic module from freezing, water must be circulated in the water circuit by the pump, which is activated at regular intervals.

Combination of options for periods when the machine is in standby.

Ambient unit temperature range	30RB/RBP 170R-950R or 30RQ/RQP 165R-1040R	
	Without option 116	With option 116
> 0 °C to 51 °C	-	-
-20 °C to 0 °C	Option 41 or Suitable antifreeze solution (glycol, for example)	Option 42A/B(1) or Suitable antifreeze solution (such as glycol)(1)

(1) Allow the pumps to circulate. If there is a valve, install a bypass (see diagram for winter position).

If the system is isolated by a valve, it is imperative to install a bypass as indicated below.

Winter position

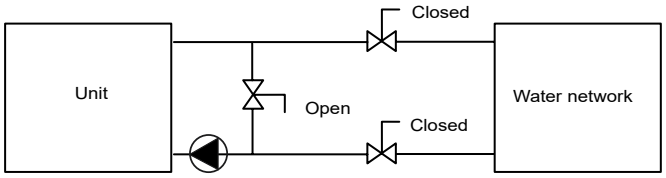

IMPORTANT REMINDERS:

Note: option 49 desuperheater is delivered without frost protection. The installer is responsible for this

Depending on the atmospheric conditions in your region, you need to:

- ***Add an appropriate antifreeze solution agreed by the manufacturer (maximum of 45%) to protect the system down to a temperature of 10 K below the lowest temperature likely to occur locally.***
- ***For extended shut-downs, drain and add an anti-freeze solution to the heat exchanger (use the drain valve located at the water inlet).***
- ***To prevent corrosion due to differential aeration, if the system is to be empty for more than 1 month, the heat transfer fluid circuit should be protected with a blanket of neutral gas (0.5 bar maximum). If the heat transfer fluid does not meet the manufacturer's recommendations, a nitrogen blanket must be applied immediately.***
- ***In case of prolonged non-usage, the hydraulic circuits must be protected by circulating a passivating solution (consult a specialist).***
- ***At the start of the next season, refill the unit with water and add an inhibitor.***
- ***If auxiliary equipment is installed in the system, the installer must ensure that the resultant flow rates are still within the minimum and maximum values indicated in the operating limits table (application data).***
- ***If frost protection is dependent on electric heaters, never de-energize the unit when frost protection is required. To ensure protection, the main unit disconnect switch and the auxiliary heater protection circuit breaker must be closed (see wiring diagram to locate these components). If it is not to be used in freezing conditions, or during a prolonged power failure (planned or unplanned), the water type heat exchanger and external pipes must be drained without delay. Damage caused by frost is not covered by the warranty.***
- ***The heat exchanger temperature sensors are an essential frost protection element: if piping trace heaters are used, ensure the external heaters do not affect the measurements provided by these sensors.***
- ***If there is a Water Type Heat Exchanger Connection sleeves option, it is necessary to install a heater on each extension in order to protect the water pipes down to an outdoor temperature of 0 °C. The anti-freeze and heater solutions can be combined.***

9 - NOMINAL SYSTEM WATER FLOW RATE CONTROL

Refer to the schematic diagram in the "Hydraulic connections" paragraph for all item references in this chapter.

The water circulation pumps of the units in the range have been designed to allow the hydraulic modules to operate in all possible configurations depending on the specific system conditions, i.e. with water inlet/outlet temperature differences (Delta T) at full load which vary from 3 to 10 K.

This temperature difference required between the water inlet and outlet determines the nominal flow rate of the system. Use the specification provided when selecting the unit to determine the system's operating conditions.

In particular, collect the data to be used for the control of the system flow rate:

- For a unit without hydraulic module: nominal pressure drop at the unit terminals (plate heat exchanger + internal pipe). This is measured with pressure gauges that must be installed at the inlet and outlet of the unit (item 21).
- Units with fixed-speed pumps: nominal flow rate. The pressure of the fluid is measured by sensors installed at the inlet of the pump and outlet of the unit (items 7 and 10). The system calculates the flow rate associated with this differential pressure. The flow rate can be read directly on the user interface (refer to the control manual for the range).
- Units with variable-speed pumps – control on pressure differential: pressure differential at the hydraulic module terminals,
- Units with variable-speed pumps – control on temperature differential: nominal temperature difference at the exchanger.

If this information is not available when the system is commissioned, contact the engineering and design department responsible for the system to obtain it.

This data can be obtained either from the performance tables included in the technical documentation (for cases where the water type heat exchanger temperature delta is 5 K) or from the "Electronic Catalogue" selection program for all other applicable temperature delta in the range of 3 to 10 K.

9.1 - Units without hydraulic module

General information

The nominal flow rate of the system will be set using a manual valve that should be installed on the water outlet pipe (item 22 on the typical hydraulic circuit diagram).

Due to the pressure drop it generates on the hydraulic system, this flow rate control valve is used to set the system pressure/flow rate curve to the pump pressure/flow rate curve, to obtain the nominal flow rate at the desired operation point.

This is checked by reading the pressure drop on the unit (plate heat exchanger + internal piping).

As the exact total system pressure drop is not known upon commissioning, it is necessary to adjust the water flow rate with the control valve to obtain the installation's specific flow rate.

Hydraulic circuit cleaning procedure

- Open all control valves completely (item 22).
- Start up the system pump.
- Read the pressure drop as the difference between the unit inlet and outlet pressures on the pressure gauge (item 21).
- Let the pump run for 2 hours continuously to flush the system's hydraulic circuit (presence of contaminating solids).
- Perform another reading.
- Compare this value to the initial value.
- A changed value indicates that the filters in the system need to be removed and cleaned. In this case, close the shut-off valves on the water inlet and outlet (item 19) and remove the filters then clean (items 1 and 20) after draining the hydraulic part of the unit (items 6).
- Remove the air from the circuit (items 5 and 17).
- Repeat until all fouling is removed from the filter.

Water flow rate adjustment procedure

Once the circuit has been decontaminated, read the pressures on the pressure gauges (water inlet pressure - outlet pressure) to determine the pressure drop across the unit terminals (plate heat exchanger + internal piping).

Compare the value obtained to the theoretic value of the selection

(WARNING: Take into account the pressure drop on the filter if it is located between the pressure gauges).

If the pressure drop reading is above the specified value, this indicates that the flow rate at the terminals of the unit (and therefore within the system) is too high. In this case, close the control valve and read the new difference in pressure.

Proceed by repeatedly closing the control valve (item 22) until the nominal flow rate is achieved at the unit's required operation point

NOTE:

If the system has an excessive pressure drop in relation to the available static pressure delivered by the system's pump, the nominal water flow rate cannot be obtained (lower resulting flow rate) and the temperature difference between the water inlet and outlet of the water type heat exchanger will be increased.

To reduce the installation's hydraulic system pressure drop, it is necessary to:

- Reduce the pressure drops of individual components (bends, level changes, options, etc.) as much as possible;
- Use the correct pipe diameter;
- Do not extend the hydraulic systems.

9.2 - Units with hydraulic module and fixed-speed pump

General information

See the paragraph on "Units without hydraulic module"

Hydraulic circuit cleaning procedure

- Open all control valves completely (item 22).
- Start up the unit's pump.
- Read the flow rate on the user interface.
- Let the pump run for 2 hours continuously to flush the system's hydraulic circuit (presence of contaminating solids).
- Perform another reading.
- Compare this value to the initial value.
- A decrease in the flow rate value indicates that the filters in the system need to be removed and cleaned. In this case, close the shut-off valves on the water inlet and outlet (item 19) and remove the filters (items 20 and 1) after draining the hydraulic part of the unit (items 6).
- Remove the air from the circuit (items 5 and 17).
- Repeat until all fouling is removed from the filter

Water flow rate adjustment procedure

Once the circuit is cleaned, read the flow rate value on the user interface and compare it to the theoretical selection value.

If the value of the flow rate read is greater than the specified value, this indicates that the overall pressure drop in the system is too low compared to the available static pressure generated by the pump.

In this case, close the control valve (item 22) and read the new flow rate value.

Proceed by repeatedly closing the control valve (item 22) until the nominal flow rate is achieved at the unit's required operation point.

NOTE:

If the network has an excessive pressure drop in relation to the available static pressure delivered by the unit pump, the nominal water flow rate cannot be obtained (lower resulting flow rate) and the difference in temperature between the water inlet and outlet of the water type heat exchanger will be increased

To reduce the installation's hydraulic system pressure drop, it is necessary to:

- Reduce the pressure drops of individual components (bends, level changes, options, etc.) as much as possible;
- Use the correct pipe diameter;
- Do not extend the hydraulic systems

Example: Unit with specified nominal flow rate of 10.6 l/s

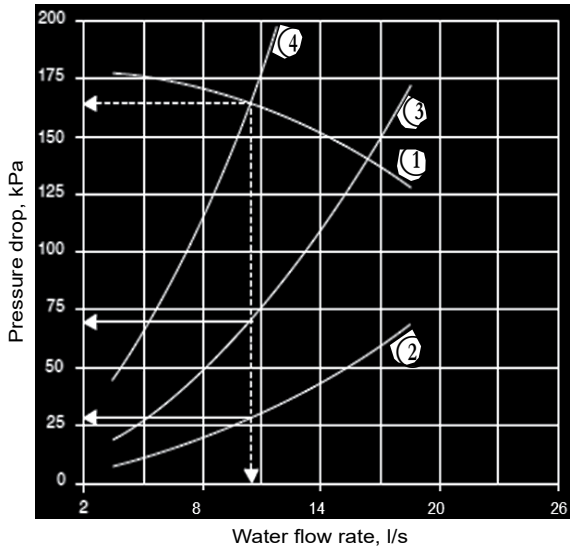

Key

1. Unit pump curve
2. Pressure drop in the hydraulic module (to be measured on the pressure gauge installed on the water inlet and outlet)
3. Pressure drop in the installation with wide open control valve
4. Pressure drop in the system after setting the valve to obtain the nominal flow rate specified.

9.3 - Units with hydraulic module and variable-speed pump – Pressure differential control

The installation flow rate has not been set to a rated value.

It will be adjusted by the system, by varying the pump speed, to maintain a constant operating pressure differential value defined by the user.

This is checked by the pressure sensor at the outlet of the water type heat exchanger (item 10 on the typical hydraulic circuit diagram).

The system calculates the measured pressure difference, compares it with the setpoint value set by the user and then modulates the pump speed module accordingly, resulting in:

- An increase in the flow rate if the measurement is below the setpoint,
- A decrease in the flow rate if the measurement exceeds the setpoint.

This variation in flow rate is limited by the maximum and minimum permissible flow rate values for the unit and by the maximum and minimum pump supply frequency values.

The maintained pressure difference value may, in certain cases, differ from the setpoint value:

- If the setpoint value is too high (obtained for a flow rate higher than the maximum value or a frequency greater than the maximum value), the system will stop once it reaches the maximum flow rate or maximum frequency, which will result in a pressure difference below the setpoint,
- If the setpoint value is too low (obtained for a flow rate lower than the minimum value or a frequency less than the minimum value), the system will stop once it reaches the minimum flow rate or minimum frequency, which will result in a pressure difference greater than the setpoint.

Contact the manufacturer's Service to implement the procedures described below

Hydraulic circuit cleaning procedure

Before proceeding, it is advisable to remove any possible contamination from the hydraulic circuit.

- Start up the unit pump using the override command.
- Set the frequency to the maximum value to generate a high flow rate.
- If there is a “Maximum flow exceeded” alarm, reduce the frequency until an acceptable value is reached.
- Read the flow rate on the user interface.
- Let the pump run for 2 hours continuously to flush the system's hydraulic circuit (presence of contaminating solids).
- Perform another reading of the flow rate and compare this value with the initial value. A decrease in the flow rate value indicates that the filters in the system need to be removed and cleaned. In this case, close the shut-off valves on the water inlet and outlet (item 19) and remove the filters (items 20 and 1) after draining the hydraulic part of the unit (items 6).
- Remove the air from the circuit (items 5 and 17).
- Repeat until all fouling is removed from the filter

Procedure for controlling the pressure differential setpoint

Once the circuit is cleaned, place the hydraulic circuit in the configuration for which the unit selection was performed (generally, this will be all valves open and all cooling coils active)

Read the flow rate on the user interface and compare the value obtained with the theoretical value of the selection:

- If the flow rate read is greater than the preset value, reduce the pressure differential setpoint on the user interface to reduce the flow rate value;
- If the flow rate read is lower than the preset value, increase the pressure differential setpoint on the user interface to increase the flow rate value

Repeat until the unit's nominal flow rate at the required operation point is achieved.

Stop the forced operation of the pump and proceed to the configuration of the unit for the required control mode. Modify the control parameters:

- Set the water flow rate control to “pressure differential”
- Set the value of the required pressure differential.

The unit's default factory configuration is the minimum speed (frequency: 30 Hz).

NOTE:

If during adjustment, the low or high frequency limits are reached before reaching the specified flow rate, keep the pressure differential value at its lower or higher limit as the control parameter value.

If the user knows in advance the pressure differential value at the unit outlet to be maintained, this value can be entered directly as a parameter to be declared. You should not, however, omit the hydraulic circuit cleaning sequence

9.4 - Units with hydraulic module and variable-speed pump – Temperature differential control

The installation flow rate has not been set to a rated value.

The flow rate will be adjusted, by varying the pump speed, to maintain a heat exchanger temperature differential value defined by the user.

This is checked by the temperature sensors at the water exchanger inlet and outlet (items 8 and 9 on the typical hydraulic circuit diagram).

The system reads the measured temperature values, calculates the corresponding Delta T°, compares it with the setpoint value set by the user and then modulates the pump speed accordingly.

- This results in an increase in the flow rate if the Delta T° exceeds the setpoint.
- This results in a decrease in the flow rate if the Delta T° is less than the setpoint.

This variation in flow rate is limited by the maximum and minimum permissible flow rate values for the unit and by the maximum and minimum pump supply frequency values.

The maintained Delta T° may, in certain cases, differ from the setpoint value:

- If the setpoint value is too high (corresponding to a flow rate lower than the minimum value or a frequency less than the minimum value), the system will be limited to the minimum flow rate or minimum frequency, which will result in a Delta T below the setpoint,
- If the setpoint value is too low (corresponding to a flow rate higher than the maximum value or a frequency greater than the maximum value), the system will be limited to the maximum flow rate or maximum frequency, which will result in a Delta T above the setpoint.

Contact the manufacturer's Service to implement the procedures described below.

Hydraulic circuit cleaning procedure

Refer to the hydraulic circuit cleaning procedure.

Procedure for adjusting the Delta T° setpoint

Once the circuit is cleaned, stop the forced start of the pump and proceed to the configuration of the unit for the required control mode.

Modify the control parameters:

- Water flow rate control method (temperature differential)
- Set the required Delta T.

The unit's default factory configuration is the minimum speed (frequency: 30 Hz).

9.5 - Units with hydraulic module and variable-speed pump - Setting a fixed flow rate for the system

The flow will be set to a nominal value. This value will remain constant, and will not be dependent on variations in the installation's load.

Contact the manufacturer's service department to implement the procedures described below

Hydraulic circuit cleaning procedure

Refer to the hydraulic circuit cleaning procedure.

Procedure for controlling the flow rate

Once the circuit has been cleaned, set the required water flow rate by adjusting the pump frequency on the user interface.

Stop the forced operation of the pump and proceed to the configuration of the unit for the required control mode. Modify the control parameters:

- Water flow rate control method (fixed speed)
- Constant frequency value.

The unit's default factory configuration is the minimum speed (frequency: 30 Hz).

9.6 - Available static system pressure

Units with hydraulic module (fixed-speed pump or variable-speed pump at 50 Hz)

Data applicable for:

- Pure water at 20 °C.
- Refer to the “Water exchanger water flow” section for the maximum water flow rate values.
- If ethylene glycol is used, the maximum flow rate is reduced.

9.6.1 - 30RB/30RBP 170R-950R units

High pressure pumps

Single pumps

Sizes 170R - 410R

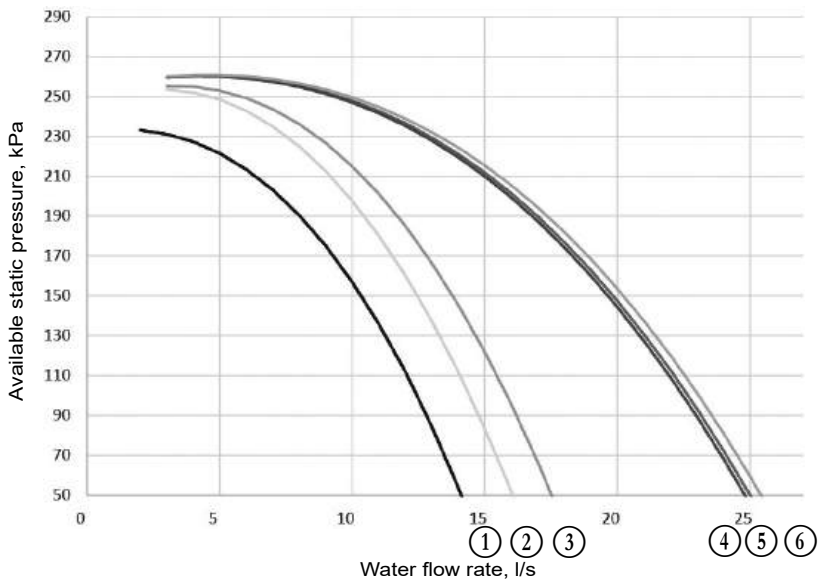

1 30RB-RBP 170R - 230R
2 30RB-RBP 270R
3 30RB-RBP 310R
4 30RB-RBP 340R
5 30RB-RBP 380R
6 30RB-RBP 410R

Sizes 450R - 550R

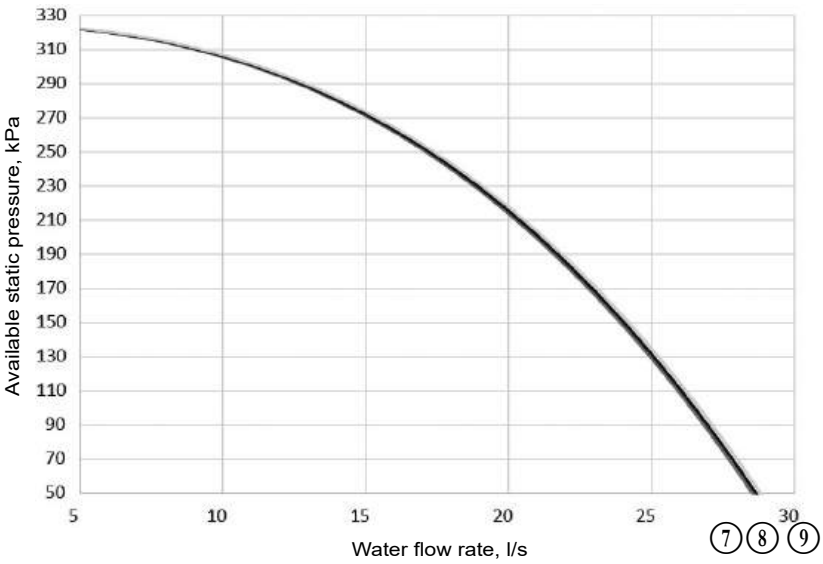

7 30RB-RBP 450R
8 30RB-RBP 480R
9 30RB-RBP 550R

9 - NOMINAL SYSTEM WATER FLOW RATE CONTROL

Sizes 610R - 950R

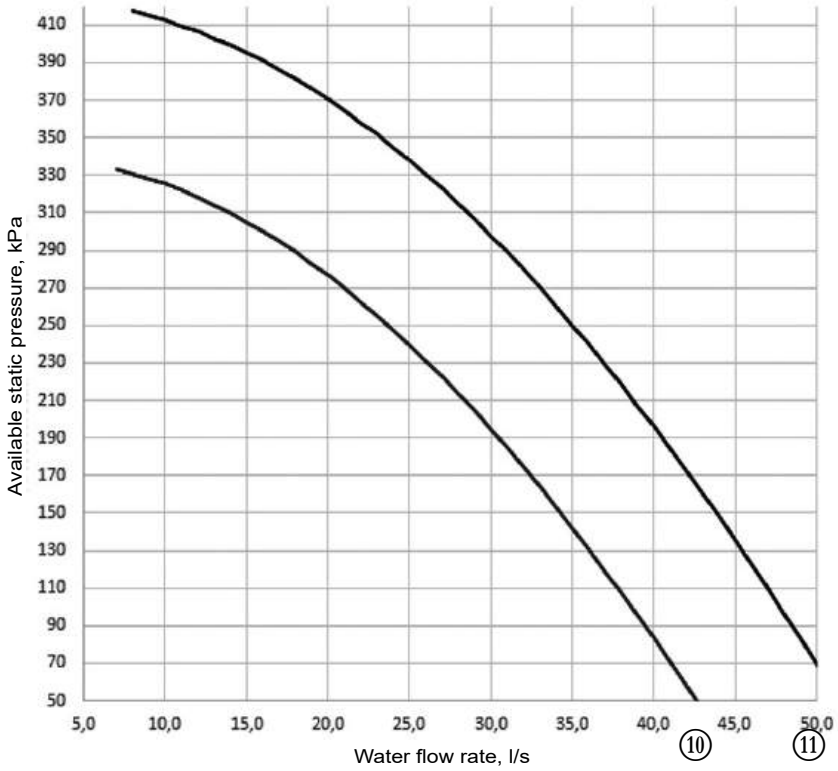

⑩ 30RB-RBP 610R - 720R
⑪ 30RB-RBP 770R - 950R

9 - NOMINAL SYSTEM WATER FLOW RATE CONTROL

Dual pumps

Sizes 170R - 410R

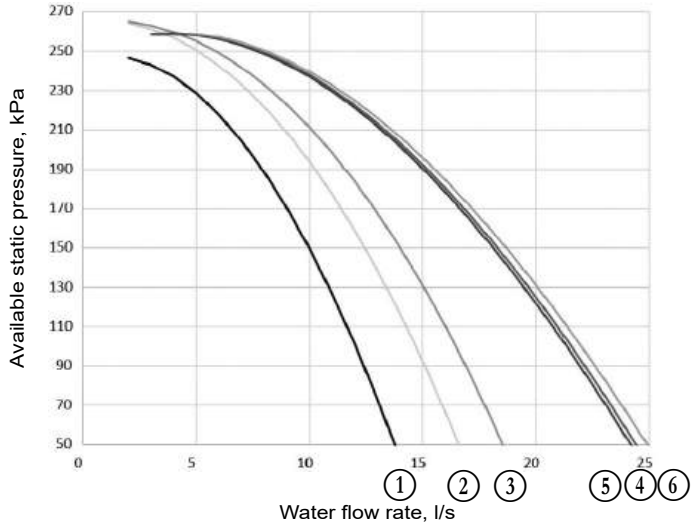

1 30RB-RBP 170R - 230R
2 30RB-RBP 270R
3 30RB-RBP 310R
4 30RB-RBP 340R
5 30RB-RBP 380R
6 30RB-RBP 410R

Sizes 450R - 550R

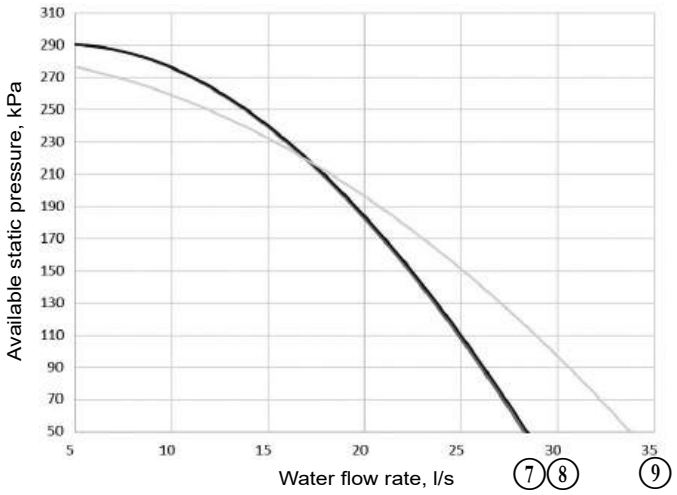

7 30RB-RBP 450R
8 30RB-RBP 480R
9 30RB-RBP 550R

Sizes 610R - 950R

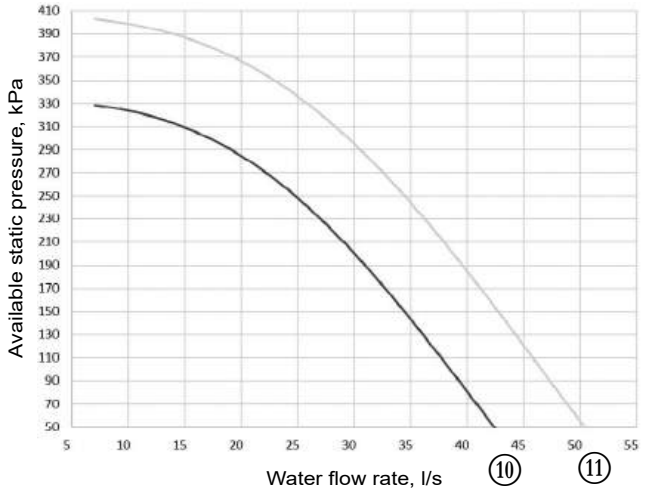

10 30RB-RBP 610R - 720R
11 30RB-RBP 770R - 950R

Low pressure pumps

Single pumps

Sizes 170R - 380R

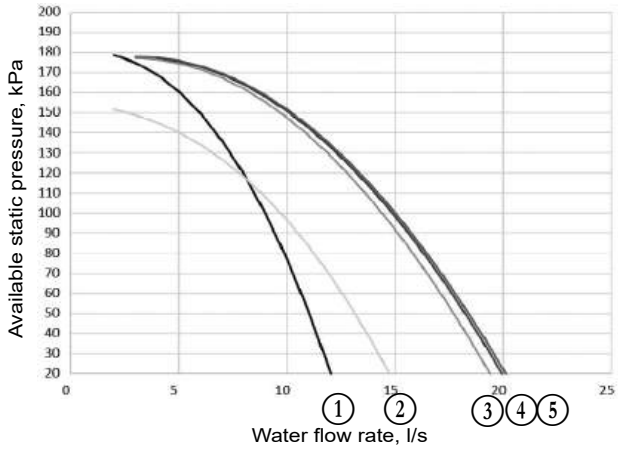

1 30RB-RBP 170R - 230R
2 30RB-RBP 270R
3 30RB-RBP 310R
4 30RB-RBP 340R
5 30RB-RBP 380R

Sizes 410R - 550R

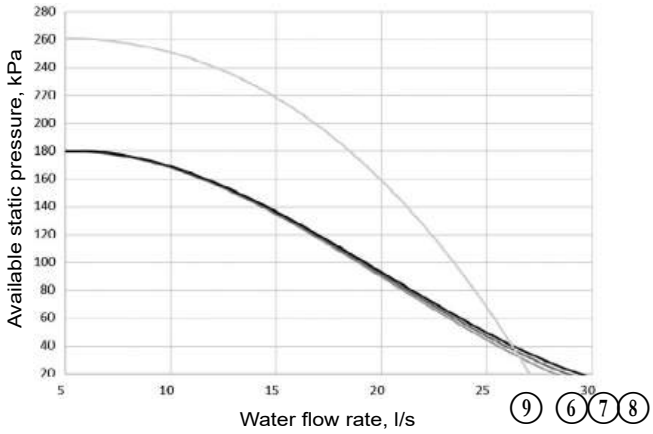

6 30RB-RBP 410R
7 30RB-RBP 450R
8 30RB-RBP 480R
9 30RB-RBP 550R

Dual pumps

Sizes 170R - 410R

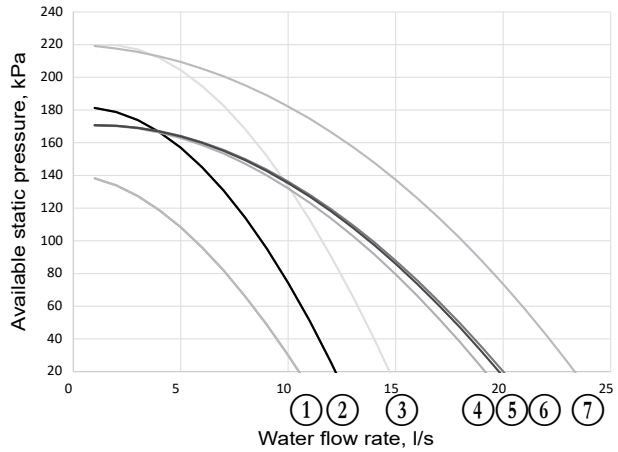

1 30RB-RBP 170R - 190R
2 30RB-RBP 210R - 230R
3 30RB-RBP 270R
4 30RB-RBP 310R
5 30RB-RBP 340R
6 30RB-RBP 380R
7 30RB-RBP 410R

Sizes 450R - 550R

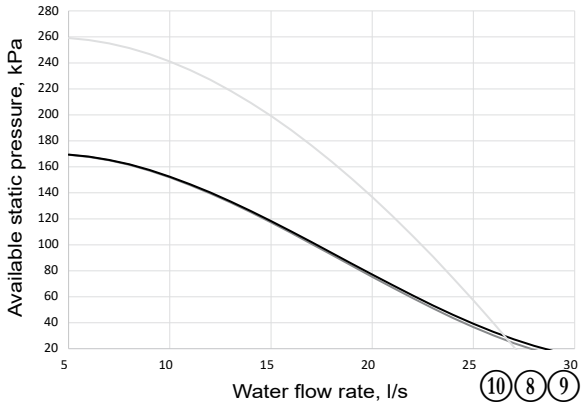

8 30RB-RBP 450R
9 30RB-RBP 480R
10 30RB-RBP 550R

9.6.2 - 30RQ/30RQP 165R-1040R units

High pressure pumps

Single pumps

Sizes 165R - 270R

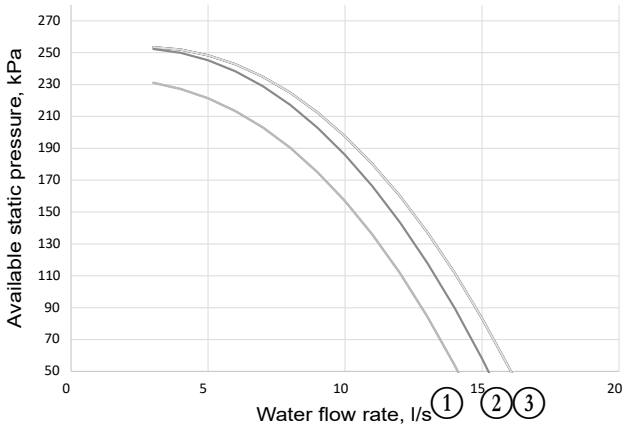

1 30RQ-RQP 165R - 180R
2 30RQ-RQP 210R
3 30RQ-RQP 230R - 270R

Sizes 310R - 680R

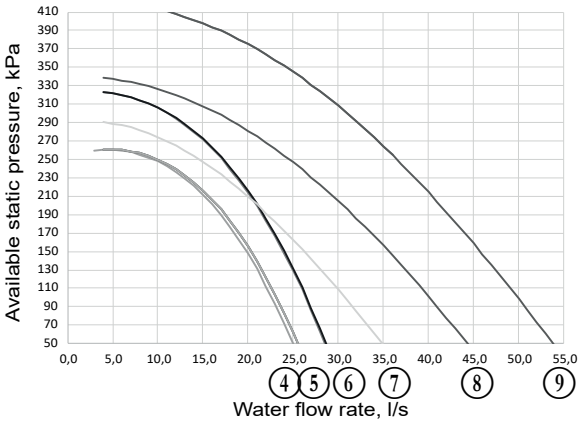

4 30RQ-RQP 310R
5 30RQ-RQP 330R - 400R
6 30RQ-RQP 430R - 470R
7 30RQ-RQP 520R
8 3RQP 570R
9 3RQP 610R - 680R

Sizes 740R - 1040R

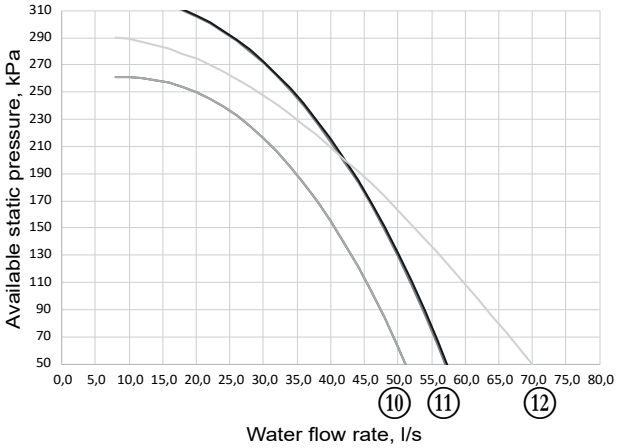

10 30RQP 740R - 800R
11 30RQP 860R - 940R
12 30RQP 1040R

Dual pumps

Sizes 165R - 270R

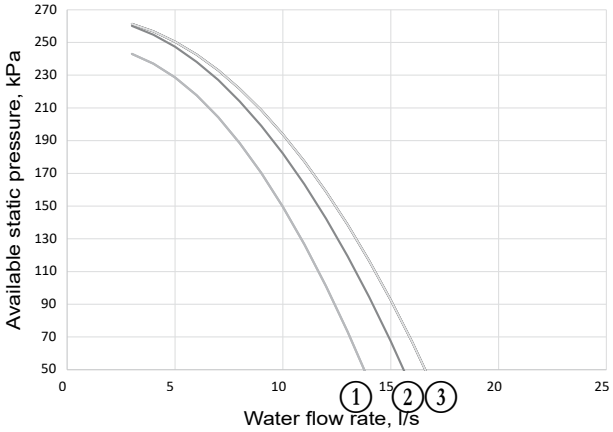

1 30RQ-RQP 165R - 180R
2 30RQ-RQP 210R
3 30RQ-RQP 230R - 270R

Sizes 310R - 680R

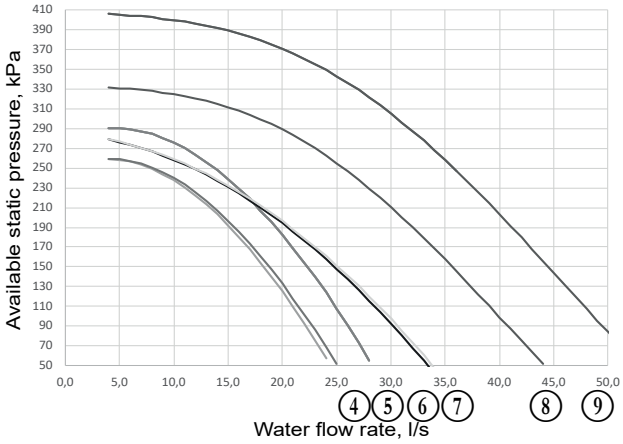

4 30RQ-RQP 310R
5 30RQ-RQP 330R
6 30RQ-RQP 370R - 430R
7 30RQ-RQP 470R - 520R
8 3RQP 570R
9 3RQP 610R - 680R

Sizes 740R - 1040R

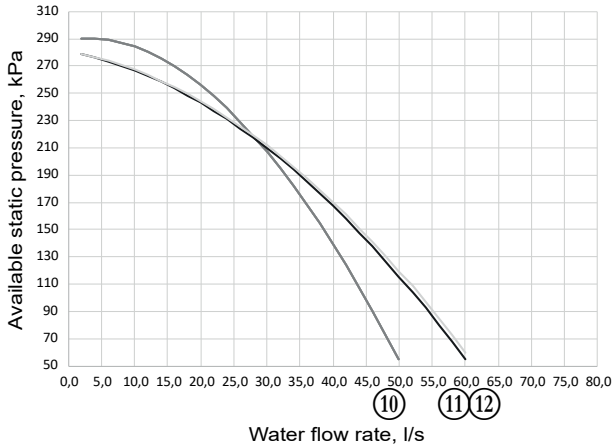

10 30RQP 740R - 860R
11 30RQP 940R
12 30RQP 1040R

Low pressure pumps

Single pumps

Sizes 165R - 270R

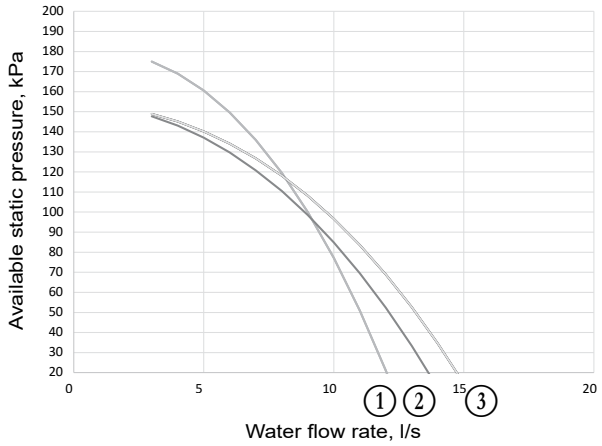

1 30RQ-RQP 165R - 180R
2 30RQ-RQP 210R
3 30RQ-RQP 230R - 270R

Sizes 310R - 520R

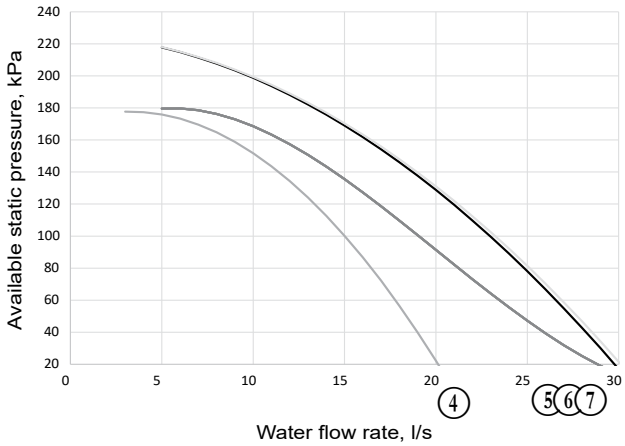

4 30RQ-RQP 310R
5 30RQ-RQP 330R - 430R
6 30RQ-RQP 470R
7 30RQ-RQP 520R

Dual pumps

Sizes 165R - 270R

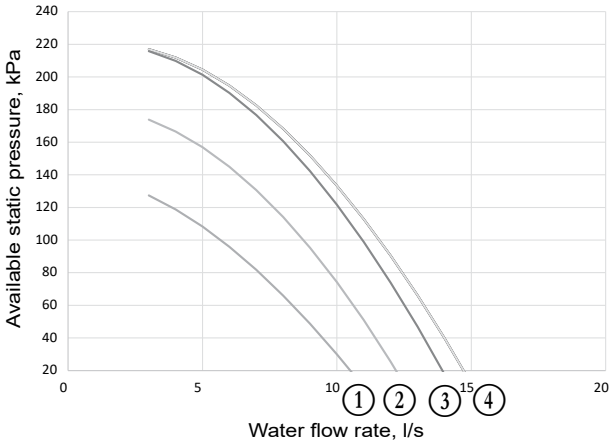

1 30RQ-RQP 165R
2 30RQ-RQP 180R
3 30RQ-RQP 210R
4 30RQ-RQP 230R - 270R

Sizes 310R - 520R

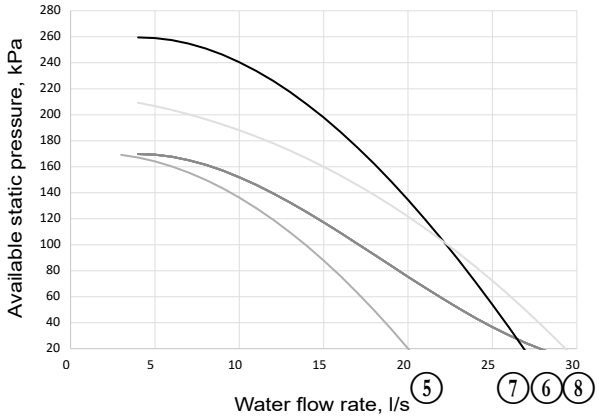

5 30RQ-RQP 310R
6 30RQ-RQP 330R - 430R
7 30RQ-RQP 470R
8 30RQ-RQP 520R

10.1 - Checks before system start-up

Before starting up the thermodynamic system, the complete system, including the thermodynamic system, must be verified against the installation drawings, dimensional drawings, system piping and instrumentation diagrams and the wiring diagrams.

All measures must be taken to ensure that the pressure and temperature limits, specifically those listed on the unit nameplates, are not exceeded during operation, maintenance and recycling.

Heat exchange fluid temperatures above the maximum recommended can lead to an increase in the refrigerant pressure and can cause a loss of refrigerant due to the relief valve discharge.

National regulations must be respected during these checks. If the national regulation does not specify any details, refer to standard EN 378 as follows:

External visual installation checks:

- Ensure that the machine is charged with refrigerant. Verify on the unit name plate that the 'fluid transported' is that recommended for operation, and is not nitrogen.
- Compare the complete installation with the refrigeration system and power circuit diagrams.
- Check that all documents provided by the manufacturer (dimensional drawings, pipe and instrument diagram (PID), declarations, etc.) to comply with the regulations are present. If any documentation is missing, order a replacement.
- Make sure the environmental safety and protection devices and arrangements provided by the manufacturer to comply with the regulations are in place.
- Make sure all declarations of conformity for the pressure containers, identification plates and documentation required to comply with local regulations are present.
- Verify the free passage of access and safety routes.
- Comply with the instructions and directives to prevent the deliberate release of refrigerant fluids.
- Verify the installation of connections.
- Verify the supports and fixing elements (materials, routing and connection).
- Verify the quality of welds and other joints.
- Check the protection against mechanical damage.
- Check the protection against heat.
- Check the protection of moving parts.
- Verify the accessibility for maintenance or repair and to check the piping.
- Verify the status of the valves.
- Verify the quality of the thermal insulation.
- Check the condition of 400 V cable insulation.

10.2 - Commissioning

Always ensure you have read and fully understood the operating instructions for the units before starting up the unit, and ensure the following precautions have been taken:

- Check the heat-transfer fluid circulation pumps, the air handling equipment, and any other equipment connected to the heat exchangers.
- Refer to the manufacturer's instructions.
- Refer to the electrical diagram delivered with the unit.
- Ensure there are no refrigerant leaks. Check the tightening of the fastening clips on all the pipes.
- Check the power supply at the main connection point and the order of phases.
- For units without a factory-fitted hydraulic module, heat protections and connections related to the installation pump are the responsibility of the installer.
- Check the operation of the crankcase oil heaters, as well as the operation of the compressor head heaters if necessary, for six hours before the installation is started up.
- Open the suction shut-off valves on each circuit for the corresponding units.

IMPORTANT:

Commissioning and start-up must be supervised by a qualified technician.

- ***The system must have a heat load and water flowing in the exchangers when it is started up and tested.***
- ***All setpoint adjustments and control tests must be carried out before the unit is started up.***
- ***Refer to the Service guide.***

Proceed with the unit commissioning.

Make sure all safety devices are operational, and especially that the high pressure switches are engaged and that any alarms have been cleared.

NOTE:

If the manufacturer's recommendations (system, water and power connections) are not observed, no claims made under the warranty will be accepted.

10.3 - Essential points to check

Compressors

Ensure that each compressor is rotating in the correct direction, checking that the discharge temperature rises quickly, the high pressure increases and the low pressure drops. If it is rotating in the wrong direction, the power supply is incorrectly wired (reversed phases). To ensure rotation in the correct direction, swap two power supply phases.

- Check that the power cables are tightened securely in the terminal unit for each compressor.
- Check the compressor discharge temperature using a contact sensor.
- Check the input current; it should be normal.
- Check all safety devices to make sure they operate correctly.

Hydraulic

As the exact total system pressure drop is not known at start-up, adjust the water flow rate with the control valve until the desired nominal rate is obtained.

Please refer to the chapter “Nominal system water flow rate control - Procedure for adjusting the flow rate” for the steps to follow.

In any case, the hydraulic circuit must be free from pollution (removal of any solid particles in the circuit) before start-up: Please refer to the chapter “Nominal system water flow rate control - Procedure for cleaning the hydraulic circuit” for the steps to follow.

Refrigerant charge

Each unit is shipped with an exact charge of refrigerant and oil.

Check that there are no visible refrigerant or oil leaks:

- No apparent damage on the refrigerant circuit pipes (no trauma, cracks, deformation)
- No traces of grease on the connections and refrigerant circuit sensors

In case of doubt, use a refrigerant leak detection device suited to the fluid in the unit.

11 - MAIN COMPONENTS OF THE UNIT AND OPERATING CHARACTERISTICS

11.1 - Compressors

The units use hermetic scroll compressors.

Each compressor is equipped as standard with a crankcase oil heater, and with a head heater for certain configurations.

There is no heater fault detection.

Each compressor sub-function is equipped with:

- Anti-vibration mountings between the unit chassis and the chassis of the compressor sub-assembly,
- A safety pressure switch on the discharge line of each circuit,
- Pressure and temperature sensors at the common suction line and a pressure sensor at the common discharge line.
- A suction shut-off valve (for 30RQ/RQP units)
- Restrictors (not visible) on certain suction pipes, to ensure oil level equalisation between all compressors,

11.2 - Lubricant

The compressors installed on the units have an oil charge, ensuring good lubrication under all operating conditions.

The oil level check can be done:

- On the system: the oil levels must be greater than or equal to half of the sight glass.
- A few minutes after the sub-function has come to a complete stop: the oil levels must be visible in the sight glasses.

If this is not the case, there might be a leak or an oil trap in the circuit.

If there is an oil leak, find and repair it, then refill with refrigerant and oil.

See the Service Guide for the oil removal and refill procedures.

IMPORTANT: Too much oil in the circuit can cause the unit to malfunction.

NOTE:

Only use oils which have been approved for the compressors.

Never use used oil or oil which has been exposed to air.

IMPORTANT: Polyolester oils are completely incompatible with mineral oils.

Only use the oils specified by the manufacturer.

11.3 - Air-cooled exchanger

30RB/RBP units are equipped with all-aluminium micro-channel coils (MCHE).

30RQ/RQP units are equipped with coils with aluminium fins crimped onto internally grooved copper tubes (RTPF).

11.4 - Fans

Each fan motor assembly is equipped with a high-performance impeller made from recyclable composite material.

The motors are three-phase, with lifetime lubricated bearings and class F insulation (IP55 level).

When option 12 is not selected, the pressure available at the fan outlet is zero.

According to regulation No. 327/2011 implementing directive 2009/125/EC with regard to ecodesign requirements for fans driven by motors with an electric input power between 125 W and 500 kW.

Product		30RB/30RQ	Option 15LS/15LS+ (for 30RBP/30RQP)	30RBP/30RQP	Option 12	Option 17
Overall efficiency	%	38,7	35,3	40,1	40,0	48,2
Measurement category		A	A	A	A	A
Efficiency category		Static	Static	Static	Static	Static
Target efficiency level ERP2015		N(2015) 40	N(2015) 40	N(2015) 40	N(2015) 40	N(2015) 40
Efficiency level at the optimum efficiency point		43,3	42,1	44,6	43,1	53,2
Speed regulator		NO	NO	YES	YES	YES
Year of manufacture		See label on the unit	See label on the unit	See label on the unit	See label on the unit	See label on the unit
Fan manufacturer		Simonin	Simonin	Simonin	Simonin	Simonin
Motor manufacturer		Leroy Somer	Leroy Somer	Leroy Somer	Leroy Somer	EBM
Fan PN		00PSG002630700A	00PSG002630700A	00PSG002630700A	00PSG002630700A	00PSG002630700A
Motor PN		00PPG000558400A	00PPG000558500A	00PPG000558700A	00PPG000558600A	00PSG003716100A
Nominal motor capacity	kW	1,9	0,85	1,93	3,20	1,64
Flow rate	m^3/s	4,22	3,1	4,22	5,31	4,24
Pressure at optimum energy efficiency	Pa	174	96,7	174	216	174,6
Nominal Speed	rpm	949	710	948	1125	960
Specific ratio		1,002	1,002	1,002	1,002	1,002
Relevant information to facilitate the disassembly, recycling or removal of the product at the end of life		See the Maintenance manual	See the Maintenance manual	See the Maintenance manual	See the Maintenance manual	See the Maintenance manual
Relevant information to minimise impact on the environment		See the Maintenance manual	See the Maintenance manual	See the Maintenance manual	See the Maintenance manual	See the Maintenance manual

According to regulation No. 640/2009 and amendment 4/2014 implementing directive 2009/125/EC with regard to ecodesign requirements for electric motors.

Product		30RB/30RQ	Option 15LS /15LS+ (for 30RBP/30RQP)	30RBP/30RQP	Option 12	Option 17
Motor type		Asynchronous	Asynchronous	Asynchronous	Asynchronous	Synchronous
Number of poles		6	8	6	6	-
Rated input frequency	Hz	50	50	50	60	50
Nominal voltage	V	400	400	400	400	400
Number of phases		3	3	3	3	3
Motor included in the application domain of the regulation 640/2009 and amendment 4/2014		NO	NO	NO	NO	NO
Justification for exemption		Article 2.1	Article 2.1	Article 2.1	Article 2.1	Article 2.1
Ambient air temperature for which the motor is specifically designed	°C	70	70	70	70	70

The above data for fans and motors are mandatory as part of ecodesign regulations, and are provided for a standalone component (not included in the cooling system).

11.5 - Electronic expansion valve (EXV)

The EXV has a stepper motor and a sight glass which can be used to check the mechanism movement and the presence of the liquid gasket.

11.6 - Moisture indicator

Located on the EXV, enables control of the unit charge and indicates moisture in the circuit.

The presence of bubbles in the sight glass indicates an insufficient charge or non-condensables in the system.

The presence of moisture changes the colour of the indicator paper in the sight glass (from green to yellow).

11.7 - Dehumidifier filter

The role of the filter is to keep the circuit clean and moisture-free.

The moisture indicator shows when it is necessary to change the element.

A difference in temperature between the filter inlet and outlet shows that the element is dirty.

11.8 - Refrigerant accumulator with built-in filter drier

Specific data 30RQ/30RQP

The refrigerant charge required in cooling mode is greater than the permissible refrigerant charge in heating mode. The accumulator is used to store the excess charge in heating mode.

A removable element and metal filter keep the refrigerant circuit clean and free from moisture, by capturing solid contaminants.

When the moisture indicator turns yellow, it is necessary to change the element. When the unit is operating in cooling mode, a difference in temperature between the tank inlet and outlet indicates fouling of the element and/or filter.

11.9 - Water type heat exchanger

The water type heat exchanger is a brazed plate heat exchanger with two refrigerant circuits.

The hydraulic connections of the heat exchanger are Victaulic connections.

The water type heat exchanger is thermally insulated with 19 mm of foam.

As an option it can be protected against frost by an electric heater (water exchanger frost protection option).

Any products used for thermal insulation of recipients during hydraulic connection must be chemically neutral to the surfaces on which they are applied. All original materials supplied by the manufacturer comply with this requirement.

NOTE - Monitoring during operation

- **Follow local regulations on the monitoring of pressure equipment**
- **The user or the operator is usually requested to create and maintain a monitoring and maintenance register.**
- **In the absence of any regulations, or in addition to the regulations, follow the guidance in the EN 378 standard.**
- **Follow the local professional recommendations, whenever they exist.**
- **Regularly check for the presence of any impurities (e.g. sand, grit) in the heat-transfer fluids. These impurities maybe the cause of the wear or corrosion by puncture.**
- **The reports of the periodical checks by the user or the operator must be included in the monitoring and maintenance log.**

11.10 - Refrigerant

Units operating with R32 (A2L fluid).

Potentially flammable zones have been identified on the edge of the unit: please refer to chapter “4.4 - Positioning of potentially flammable zones around the unit”.

11.11 - High-pressure safety pressostat

The units are equipped with high pressure safety pressostats with automatic reset.

These pressure switches are located at the discharge of each circuit.

11.12 - Variable frequency drive

30RBP and 30RQP units are equipped with variable frequency drives to control the fan speed within the fmin-fmax frequency range (standard, fmin=5 Hz and fmax=50 Hz).

All fans on the same refrigerant circuit are actuated and controlled by a single variable frequency drive. The fans are driven by generating a supply waveform with a variable frequency and voltage, generated by pulse width modulation.

Fan start-up/shut-down and the working range frequency setpoint are controlled by the Controller through RS485 communication using the LEN Protocol.

11.13 - Fan arrangement

30RB/30RBP 170R
30RQ/30RQP 165R - 180R

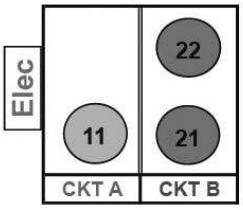

30RB/30RBP 190R -210R-230R-270R
30RQ/30RQP 210R -230R-270R

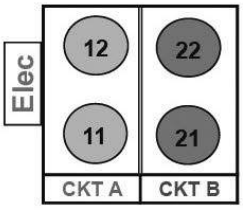

30RB/30RBP 310R-340R
30RQ/30RQP 310R-330R

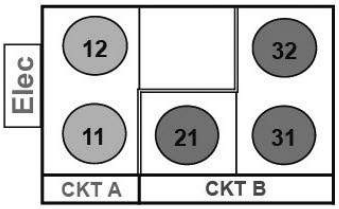

30RB/30RBP 380R-410R
-

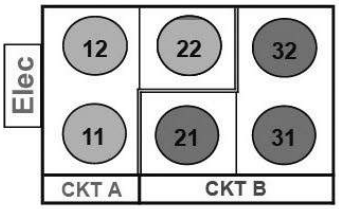

-
30RQ/30RQP 370R-400R

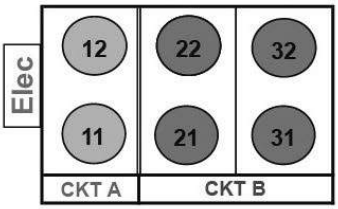

30RB/30RBP 450R-480R
30RQ/30RQP 430R-470R

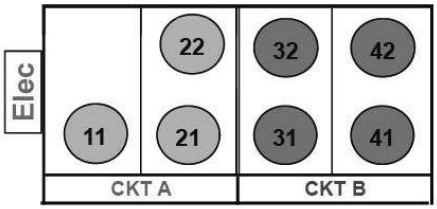

30RB/30RBP 550R
30RQ/30RQP 520R

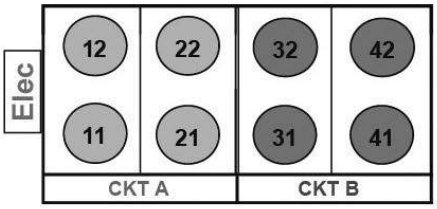

30RQP 570R
-

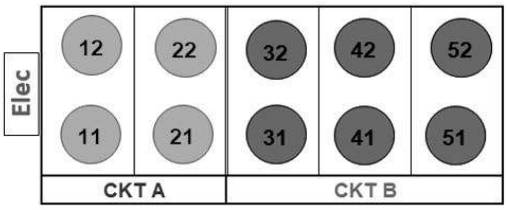

30RB/30RBP 610R
-

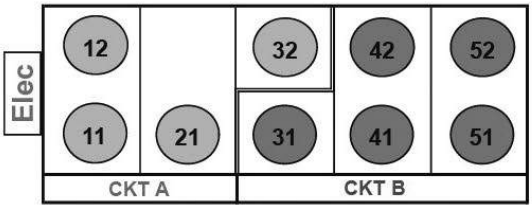

30RB/30RBP 670R-720R
-

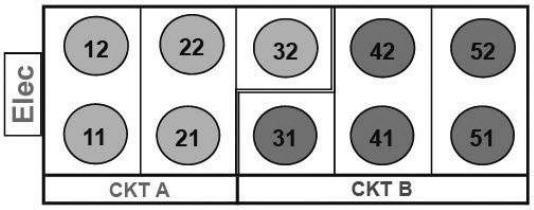

30RB/30RBP 770R-800R
-

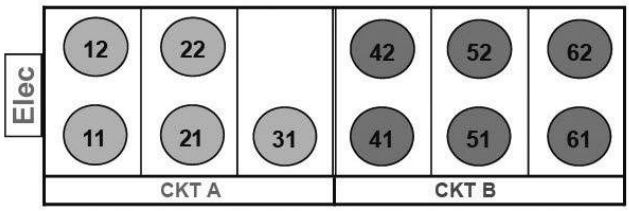

30RB/30RBP 870R-950R
30RQP 610R-680R

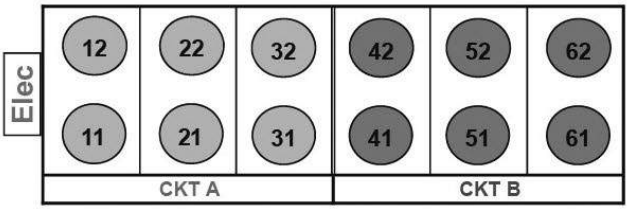

30RQP 740R-800R

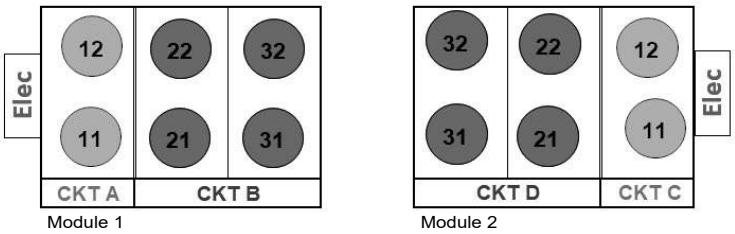

30RQP 860R-940R

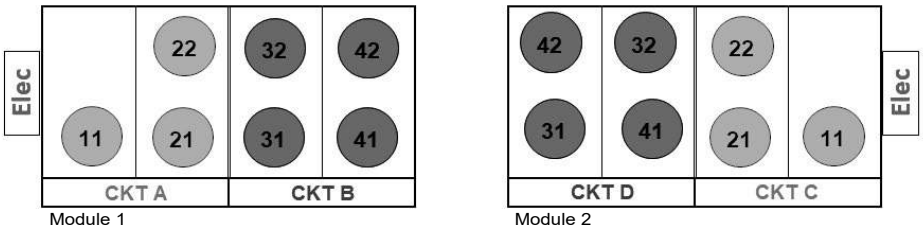

30RQP 1040R

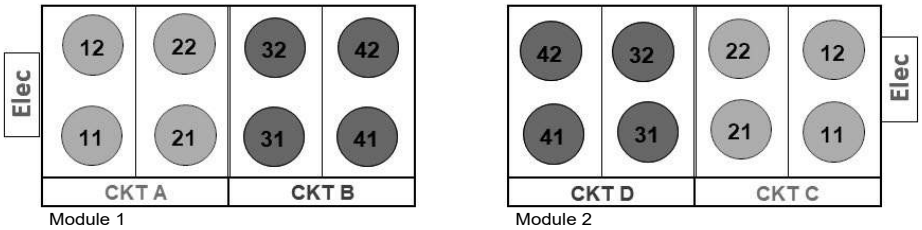

11.14 - Fan stages

Product	Circuit	Stage 1	Stage 2	Stage 3	Stage 4	Variable drive on 30RBP/30RQP or Option 17
30RB/RBP 170R	A	EV11	-	-	-	All
30RQ/RQP 165R-180R	B	EV21	EV21+EV22	-	-	All
30RB/RBP 190R-210R-230R-270R	A	EV11	EV11+EV12	-	-	All
30RQ/RQP 210R-230R-270R	B	EV21	EV21+EV22	-	-	All
30RB/RBP 310R-340R	A	EV11	EV11+EV12	-	-	All
30RQ/RQP 310R-330R	B	EV31	EV31+EV21	EV31+EV21+EV32	-	All
30RB/RBP 380R-410R	A	EV11	EV11+EV12	EV11+EV12+EV22	-	All
	B	EV31	EV31+EV32	EV31+EV32+EV21	-	All
30RQ/RQP 370R-400R	A	EV11	EV11+EV12	-	-	All
	B	EV21	EV21+EV31	EV21+EV31+EV22	EV21+EV31+EV22+EV32	All
30RB/30RBP 450R-480R	A	EV21	EV21+EV11	EV21+EV11+EV22	-	All
30RQ/RQP 430R-470R	B	EV31	EV31+EV41	EV31+EV41+EV32	EV31+EV41+EV32+EV42	All
30RB/30RBP 550R	A	EV11	EV11+EV21	EV11+EV21+EV12	EV11+EV21+EV12+EV22	All
30RQ/RQP 520R	B	EV31	EV31+EV41	EV31+EV41+EV32	EV31+EV41+EV32+EV42	All
30RB/30RBP 610R	A	EV11	EV11+EV21	EV11+EV21+EV12	EV11+EV21+EV12+EV32	All
	B	EV51	EV51+EV41	EV51+EV41+EV52	EV51+EV41+EV52+EV42	All
30RB/30RBP 670R-720R	A	EV11	EV11+EV21	EV11+EV21+EV12	EV11+EV21+EV12+EV22	All
	B	EV51	EV51+EV41	EV51+EV41+EV52	EV51+EV41+EV52+EV42	All
30RB/30RBP 770R-800R	A	EV11	EV11+EV21	EV11+EV21+EV31	EV11+EV21+EV31+EV12	All
	B	EV41	EV41+EV51	EV41+EV51+EV61	EV41+EV51+EV61+EV42	All
30RB/30RBP 870R-950R	A	EV11	EV11+EV21	EV11+EV21+EV31	EV11+EV21+EV31+EV12	All
	B	EV41	EV41+EV51	EV41+EV51+EV61	EV41+EV51+EV61+EV42	All
30RQP 570R-680R	A	-	-	-	-	All
	B	-	-	-	-	All
30RQP 620R-1040R	A / C	-	-	-	-	All
	B / D	-	-	-	-	All

Product	Circuit	Stage 5	Stage 6	Variable drive on 30RBP/30RQP or Option 17
30RB/RBP 170R	A	-	-	All
30RQ/RQP 165R-180R	B	-	-	All
30RB/RBP 190R-210R-230R-270R	A	-	-	All
30RQ/RQP 210R-230R-270R	B	-	-	All
30RB/RBP 310R-340R	A	-	-	All
30RQ/RQP 310R-330R	B	-	-	All
30RB/RBP 380R-410R	A	-	-	All
	B	-	-	All
30RQ/RQP 370R-400R	A	-	-	All
	B	-	-	All
30RB/30RBP 450R-480R	A	-	-	All
30RQ/RQP 430R-470R	B	-	-	All
30RB/30RBP 550R	A	-	-	All
30RQ/RQP 520R	B	-	-	All
30RB/30RBP 610R	A	-	-	All
	B	EV51+EV41+EV52+EV42+EV31	-	All
30RB/30RBP 670R-720R	A	EV11+EV21+EV12+EV22+EV32	-	All
	B	EV51+EV41+EV52+EV42+EV31	-	All
30RB/30RBP 770R-800R	A	EV11+EV21+EV31+EV12+EV22	-	All
	B	EV41+EV51+EV61+EV42+EV52	EV41+EV51+EV61+EV42+EV52+EV62	All
30RB/30RBP 870R-950R	A	EV11+EV21+EV31+EV12+EV22	EV11+EV21+EV31+EV12+EV22+EV32	All
	B	EV41+EV51+EV61+EV42+EV52	EV41+EV51+EV61+EV42+EV52+EV62	All
30RQP 570R-680R	A	-	-	All
	B	-	-	All
30RQP 620R-1040R	A / C	-	-	All
	B / D	-	-	All

11.15 - Variable speed ventilation (30RBP/30RQP units)

The variable speed drives on the fans are used to optimise the efficiency of the unit depending on the conditions of use (air temperature, circuit capacity) and hence improve the seasonal efficiency (SEER and SCOP).

All fans in the same refrigerant circuit are actuated and controlled by a single variable speed drive.

Therefore, they operate together at the same rotation speed.

All variable-speed fans are controlled by the unit controller.

For an EC fan option, each variable-speed fan is equipped with its own variable drive.

The speed is controlled independently for each refrigerating circuit,

This rotation speed at full-load or part load for each circuit is controlled by an algorithm that continuously optimises the condensing (cooling mode) or evaporation (heating mode) temperature, to obtain the best unit energy efficiency (EER and COP) whatever the operating conditions.

Fan motor electrical protection

The motors of a same circuit are electrically protected by the variable frequency drive in case of short-circuit, locked rotor or general overload.

Each variable frequency drive follows a variable current characteristic, based on the frequency from 5 to 50 Hz and the number of fans controlled.

In case of fan failure (e.g. motor disconnected) the variable frequency drive will detect this problem and an alert will be sent to the user interface.

Refer to the unit's control manual for the list of alarms.

11.16 - SmartVu™ control

The interface for the SmartVu™ control has the following characteristics:

- It has a 4.3-inch colour screen.
- It is intuitive and user-friendly. Clear and concise information is presented in the local language (choice of 8 languages).
- The complete menu can be adapted to the various users (end customer, maintenance personnel, manufacturer engineers).
- Unit setting and use are secure. Password protection prevents unauthorised access to advanced parameters.
- No password is required to access the most important operating parameters.

12.1 - Tables of options

Options	No.	Description	Advantages	30RB/RBP 170R-950R	30RQ/RQP 165R-1040R
Corrosion protection, traditional coils	3A	Aluminium fins pre-treated by chemical conversion	Improved corrosion resistance, recommended for moderate marine and urban environments	No	165R-1040R
Low-temperature brine solution	6B	Low temperature chilled water production down to -8 °C with ethylene or propylene glycol	Covers specific applications such as ice storage and industrial processes	170R-950R	No
High static fans	12	Unit equipped with high pressure static variable-speed fans (maximum 200 Pa), each fan being equipped with a connection flange for connection to the ducting system.	Ducted fan discharge, optimised temperature control, based on the operating conditions and system characteristics	30RBP 170R-950R	30RQP 165R-1040R
Very low noise level	15LS	Acoustic compressor enclosure and low-speed fans	Noise level reduction for sensitive sites	170R-950R	30RQP 165R-1040R
Ultra Low Noise	15LS+	Acoustic compressor enclosure, low-speed fans and enhanced sound insulation of main noise sources	Noise level reduction for sensitive sites	170R-950R	30RQP 165R-1040R
EC fans	17	Unit equipped with EC fans	Improves the unit's energy efficiency	30RBP 170R-950R	30RQP 165R-1040R
Protection grilles	23	Metallic protection grilles	Coil protection against possible impact	170R-950R	165R-1040R
Soft starter per circuit	25E	Soft starter on each circuit	Economical solution for reduced start-up current	170R-950R	165R-1040R
Soft starter per compressor	25	Electronic starter on each compressor	Reduced start-up current	170R-410R	165R-400R
Water exchanger frost protection	41	Electric heater on the water type heat exchanger and the water duct	Water type heat exchanger module frost protection for an outdoor air temperature between 0 °C and -20 °C	170R-950R	940R-1040R
Water collector frost protection	41D	Electric resistance heater and insulation on the water collector pipes	Water collector frost protection down to -20°C outside temperature	No	30RQP 740R-1040R
Unit frost protection with Free Cooling Glycol Free option	41E	Electric resistance heater on water exchanger, and hydraulic module	Water exchanger and hydraulic module frost protection down to -20°C outside temperature	170R-950R	No
Exchanger & hydraulic frost protection	42A	Electrical heaters on the water type heat exchanger, water pipes, hydraulic module and expansion tank	Water type heat exchanger and hydraulic module frost protection down to an outdoor air temperature of -20 °C	170R-950R	940R-1040R
Exchanger and hydraulic frost protection with buffer tank	42B	Electrical heaters on the water type heat exchanger, water pipes, hydraulic module and optional expansion tank and buffer tank	Water type heat exchanger and hydraulic module frost protection down to an outdoor air temperature of -20 °C	170R-950R	940R -1040R
Partial heat recovery	49	Unit equipped with one desuperheater on each refrigerant circuit	Production of free high-temperature hot water simultaneously with chilled water production (or hot water for heat pump)	170R-950R	165R-1040R
Total heat recovery	50	Unit equipped with additional heat exchanger in series with the condenser coils.	Production of free hot water, adjustable on demand	30RBP 170R-950R	No
Lead/Lag operation	58	Unit equipped with supplementary water outlet temperature sensor kit (to be field installed) allowing Lead/Lag operation of two units connected in parallel	Optimised operation of two units connected in parallel operation with runtime balancing	170R-950R	165R-680R
Compressor suction and discharge valves	92A	Shut-off valves on the common compressor suction and discharge pipes	Simplified maintenance. Possibility to store the refrigerant charge in the cooler or condenser side during servicing	170R-950R	165R-1040R
HP single-pump hydraulic module	116R	Single high-pressure water pump. (expansion tank with built-in safety hydraulic components available in option)	Quick and easy installation (plug & play)	30RB 170R-380R 30RBP 170R-550R	165R-520R
Evaporator dual HP pump	116S	Dual high-pressure fixed speed water pump.(optional expansion vessel and built-in hydraulic safety components available)	Quick and easy installation (plug & play)	30RB 170R-380R 30RBP 170R-550R	165R-520R

Options	No.	Description	Advantages	30RB/RBP 170R-950R	30RQ/RQP 165R-1040R
Evaporator single LP pump	116T	Single low-pressure fixed speed water pump. (optional expansion vessel and built-in hydraulic safety components available)	Quick and easy installation (plug & play)	30RB 170R-380R 30RBP 170R-550R	165R-520R
LP dual-pump hydraulic module	116U	Dual low-pressure water pump, fixed speed. (optional expansion vessel and built-in hydraulic safety components available)	Quick and easy installation (plug & play)	30RB 170R-380R 30RBP 170R-550R	165R-520R
Variable-speed single HP pump	116V	Single high-pressure water pump, water filter, electronic water flow control, pressure sensors.Multiple variable water flow control options.(optional expansion vessel and built-in hydraulic safety components available)	Quick and easy installation (plug & play), significant pumping energy cost savings (up to 2/3), tighter water flow control.	170R-950R	165R-1040R
Variable-speed dual high-pressure pump.	116W	Dual high-pressure water pump with speed regulator, pressure sensors. Multiple water flow rate control options. (optional expansion vessel and built-in hydraulic safety components available)	Quick and easy installation (plug & play), significant reduction in pumping energy consumption level (up to two-thirds), precise water flow control, improved system reliability	170R-950R	165R-1040R
High energy efficiency underfloor heating/cooling application	119C	Optimisation of the refrigerant circuit and control for the underfloor heating/cooling system application	Improvement of performance and reduction of energy costs for the underfloor heating/ cooling application	No	1040R, 180R, 230R-430R, 520R-860R
Lon gateway	148D	Two-directional communication board complying with Lon Talk protocol	Connects the unit by communication bus to a building management system	170R-950R	165R-1040R
ModBus over IP and RS485 communication gateway	149B	Two-directional high-speed communication using the ModBus over Ethernet network (IP) protocol	Easy, quick connection via Ethernet line to a building technical management system. Allows access to several unit parameters.	170R-950R	165R-1040R
Bacnet over IP	149	Two-directional high-speed communication using BACnet protocol over Ethernet network (IP)	Easy and high-speed connection by Ethernet line to a BMS. Allows access to multiple unit parameters	170R-950R	165R-1040R
Energy management module	156	EMM Control board with additional inputs/ outputs. See Energy Management Module section	Extended remote control capabilities (setpoint reset, ice storage end, demand limits, boiler on/off command...)	170R-950R	165R-1040R
Smart Grid Ready	157D	Standardized and secured label for integration on the smart electrical networks (DE, AUT, CH).	Optimizing the energy efficiency of the installation and helping to reduce the carbon footprint	No	165R-1040R
Contact for refrigerant leak detection	159	0-10 V signal to report any refrigerant leakage in the unit directly (the leak detector itself must be supplied by the customer)	Immediate customer notification of refrigerant losses to the atmosphere, allowing timely corrective actions	170R-950R	165R-1040R
Phase controller	159B	Phase controller on the power supply	Reinforced protection of the unit by monitoring rotation, the absence and asymmetry of the phases, and the over- or under-voltage of the electricity network	170R-950R	165R-1040R
Compliance with Swiss regulations	197	Additional tests on the water type heat exchangers: supply of supplementary test certifications and certificates (supplementary documents linked to the Pressure Equipment Directive)	Compliance with Swiss regulations	170R-950R	165R-1040R
Compliance with Russian regulations	199	EAC certification	Compliance with Russian regulations	170R-950R	165R-1040R

Options	No.	Description	Advantages	30RB/RBP 170R-950R	30RQ/RQP 165R-1040R
Compliance with Australian regulations	200	Unit approved to Australian code	Compliance with Australian regulations	Standard	165R-1040R
Coil defrost resistance heaters	252	Electric heaters under the coils and the condensate pans	Prevents frost formation on the coils; compulsory in heating mode if the outdoor temperature is below 0 °C	No	165R-1040R
Insulation of the evaporator inlet/ outlet refrigerant lines	256	Thermal insulation of the evaporator inlet/ outlet refrigerant lines, with UV-resistant flexible connection and insulation	Prevents condensation on the evaporator inlet/outlet refrigerant lines	170R-950R	165R-1040R
Enviro-Shield anti-corrosion protection®	262	Coating applied using a conversion process which modifies the surface of the aluminium producing a coating that is integral to the coil. Complete immersion in a bath to ensure 100% coverage. No heat transfer variation, tested to withstand more than 4000 hours of salt spray as per ASTM B117 (or equivalent)	Improved corrosion resistance, recommended for use in moderately corrosive environments	170R-950R	No
Anticorrosion coating on Total Free Cooling option coils	262AC	Same anticorrosion treatment as on MCHE condenser coils	Improved corrosion resistance, recommended for use in moderately corrosive environments.	170R-950R	No
Anticorrosion coating on Partial Free Cooling option coils	262BD	Same anticorrosion treatment as on MCHE condenser coils	Improved corrosion resistance, recommended for use in moderately corrosive environments.	170R-950R	No
Super Enviro-Shield anti-corrosion protection®	263	Extremely durable and flexible epoxy polymer coating applied by electro coating process, final UV protective topcoat. Minimal heat transfer variation, tested to withstand more than 6000 hours of constant neutral salt spray as per ASTM B117 (or equivalent), improved impact resistance as per ASTM D2794 (or equivalent)	Improved corrosion resistance, recommended for use in extremely corrosive environments	170R-950R	No
Welded evaporator connection kit	266	Victaulic piping connections with welded joints	Easy installation	170R-950R	165R-1040R
Flanged evaporator water connection kit	268	Victaulic piping connections with flanged joints	Easy installation	170R-950R	165R-1040R
Compressor enclosure	279a	Compressor with enclosure	Improved aesthetics, compressor protection against external elements (dust, sand, water…)	170R-950R	165R-1040R
EMC class. C2, as per EN 61800-3	282	Additional RFI filters on the unit power line	Reduces electromagnetic interference in accordance with the emission level required by category C2 to allow use in the first environment (“residential environment”)	170R-950R	165R-1040R
230 V electrical plug	284	230 VAC power source provided with plug socket and transformer (180 VA, 0,8 A)	Enables connection of a laptop or an electrical device during system start-up or maintenance	170R-950R	165R-1040R
Expansion tank	293	6-bar expansion tank built into the hydraulic module (requires hydraulic module option)	Easy and fast installation (plug & play), & protection of closed water systems from excessive pressure	170R-950R	165R-1040R
Electric energy meter	294	Electric energy meter. Display of energy consumption, instantaneous (U, V, I) and cumulative (kWh) on the machine interface, data available on the communication buses	Enables acquisition, monitoring (remote on CMS/BMS) of energy used.	170R-950R	165R-1040R
Ultra-fast capacity recovery	295+	Built-in capacity module to allow an ultra-rapid restart whilst maintaining the unit's reliability.	Full capacity recovery in less than 2.5 minutes after a power failure lasting less than ten minutes. Matches requirements of typical critical mission applications. (process, data centres)	170R-950R	No
Screwed water connection sleeves for desuperheater	303	DSH connections with screw connection sleeves	Easy to install. Allows unit connection to a screw connector	170R-950R	165R-1040R

Options	No.	Description	Advantages	30RB/RBP 170R-950R	30RQ/RQP 165R-1040R
Welded connection sleeve for desuperheater	304	DSH inlet/outlet welded connection sleeves	Easy installation	170R-950R	165R-1040R
Free cooling (total)	305A	Free cooling hydraulic coils on the two refrigerant circuits	Energy savings for applications which require cooling all year round (e.g.: industrial processes, data centres)	170R-950R	No
Free cooling (partial)	305B	Free cooling hydraulic coils on a refrigerant circuit	Energy savings for applications with reduced demand for cooling in the winter (e.g. office space with computer room, meeting rooms, etc.)	170R-950R	No
Free-Cooling Glyco Free (Total)	305C	Free cooling hydraulic coils on both refrigerant circuits and decoupling exchanger.	Energy savings for applications which require cooling all year round (e.g.: industrial processes, data centres, etc.) Glycol-free operation	170R-950R	No
Water buffer tank module	307	Built-in water buffer tank module	Avoids short cycle on compressors and ensures stable water in the loop	170R-950R	165R-1040R
Free cooling dry coolers management	313	Control and connections to a Free Cooling dry coolers 09PE or 09VE fitted with option FC control box	Easy system management, control capabilities extended to a dry coolers used in Free Cooling mode	170R-950R	165R-1040R
Compliance with UAE regulations	318	Additional label on the unit with input power, current and EER under rated conditions in accordance with AHRI 550/590	Compliance with ESMA standard UAE 5010-5:2019.	170R-950R	No
Compliance with Qatar regulations	319	Specific name plate on the unit with 415 V +/-6% power supply	Compliance with KAHRAMAA regulations in Qatar	170R-950R	No
Water collection vessel	325A	Pipe system providing a single hydraulic connection point	Easy installation	No	740R-1040R
Installation or application process outside Europe	326	Specific management of option compatibility	Permits non-standard option compatibility for HVAC application in the EU	30RB 170R-380R 30RBP 170R-950R	No
Compliance with Moroccan regulations	327	Specific regulatory documentation	Compliance with Moroccan regulations	170R-950R	165R-1040R
Delivered in plastic film	331	Plastic sheet covering the unit with strapping to secure on the wooden pallet.	Prevents external dust and dirt from contaminating the machine when storing and transporting the unit.	170R-950R	165R-1040R
IT neutral system	333	Specific earthing to insulate the earth neutral point.	The unit still operates after the first electrical isolation fault to guarantee continuity of operation (industrial processes, data centres, hospitals).	170R-950R	165R-1040R

12.2 - Description

12.2.1 - Hydraulic module without variable speed (Options 116R, 116S, 116T, 116U)

The hydraulic module is composed of the system's main hydraulic components: factory-fitted water pump, screen filter and relief valve.

The fixed-speed operating pressure pump provides the nominal flow rate for the system water loop.

Several types of water pump are available to suit all applications:

- Single or dual low pressure pumps
- Single or dual high pressure pumps.

The nominal flow rate of the system should be adjusted using a manual control valve provided by the customer.

The relief valve placed on the water inlet pipes at the pump inlet limits the pressure to 400 kPa (4 bar).

A screen filter that can be easily removed is placed at the pump inlet and protects the pump and the plate heat exchanger against solid particles that are greater than 1.2 mm.

Additional options can be ordered if necessary:

- Option 42A (42B if option 307): hydraulic module protection (42A) or hydraulic module and buffer tank protection (42B) down to an outdoor temperature of -20 °C.
- Option 293: Expansion tank for water circulation system.

IMPORTANT: The use of the hydraulic module on open systems is prohibited.

12.2.2 - Hydraulic module with variable speed (Options 116V, 116W)

The composition of the hydraulic module with variable speed is similar to that of the hydraulic module without variable speed.

In this case, the pump is controlled by a variable frequency drive that allows the pump's nominal flow rate to be adjusted according to the chosen control mode (constant pressure or temperature differential, or fixed speed) and the installation operating conditions.

IMPORTANT: The use of the hydraulic module on open systems is prohibited.

12.2.3 - Partial heat recovery (Option 49)

This option enables free hot water to be produced using heat recovery by desuperheating the compressor discharge gases. The option is available for the entire 30RB/RBP and 30RQ/RQP range.

A plate heat exchanger is installed in series with the air-cooled exchanger coils on the compressor discharge line of each circuit. (This design guarantees the function for 30RQ/30RQP units in cooling and heating mode).

The control configuration for the desuperheater option is factory-assembled (see chapter 12.2.3.4 - Operation). The installer must protect the heat exchanger against frost.

12.2.3.1 - Physical properties of units with partial heat recovery using desuperheaters

30RB/RBP		170R	190R	210R	230R	270R	310R	340R	380R	410R	450R
Desuperheater in circuits A/B		Brazed-plate heat exchanger									
Water volume circuits A/B	l	2 / 3,75	2 / 3,75	3,75 / 3,75	3,75 / 3,75	3,75 / 3,75	3,75 / 5,5	3,75 / 5,5	5,5 / 5,5	5,5 / 5,5	5,5 / 7,5
Maximum operating pressure, water side	kPa	1000	1000	1000	1000	1000	1000	1000	1000	1000	1000
Hydraulic connections		Victaulic									
Connection	in	2"	2"	2"	2"	2"	2"	2"	2"	2"	2"
External diameter	mm	60,3	60,3	60,3	60,3	60,3	60,3	60,3	60,3	60,3	60,3
30RB											
Operating weight(1)											
Standard unit + desuperheater option	kg	1409	1457	1457	1581	1616	2055	2109	2271	2329	2757
Unit with option 15LS/15LS+ + desuperheater option(2)	kg	1492	1540	1540	1690	1725	2182	2236	2416	2474	2920
Unit with option 15LS/15LS+ + option 116W + desuperheater option(2)	kg	1627	1675	1675	1825	1871	2331	2431	2611	2669	3154
Unit + option 15LS/15LS+ + option 116W + option 307 + desuperheater option(2)	kg	2610	2658	2658	2808	2854	3318	3417	3597	3654	4146
30RBP											
Operating weight(1)											
Standard unit + desuperheater option	kg	1409	1457	1457	1581	1616	2055	2109	2271	2329	2757
Unit with option 15LS/15LS+ + desuperheater option(2)	kg	1492	1540	1540	1690	1725	2182	2236	2416	2474	2920
Unit with option 15LS/15LS+ + option 116W + desuperheater option(2)	kg	1627	1675	1675	1825	1871	2331	2431	2611	2669	3154
Unit + option 15LS/15LS+ + option 116W + option 307 + desuperheater option(2)	kg	2610	2658	2658	2808	2854	3318	3417	3597	3654	4146

30RB/RBP		480R	550R	610R	670R	720R	770R	800R	870R	950R
Desuperheater in circuits A/B		Brazed-plate heat exchanger								
Water volume circuits A/B	l	5,5 / 7,5	7,5 / 7,5	7,5 / 11	11 / 11	11 / 11	11 / 15	11 / 15	15 / 15	15 / 15
Maximum operating pressure, water side	kPa	1000	1000	1000	1000	1000	1000	1000	1000	1000
Hydraulic connections		Victaulic								
Connection	in	2"	2"	2"	2"	2"	2"	2"	2"	2"
External diameter	mm	60,3	60,3	60,3	60,3	60,3	60,3	60,3	60,3	60,3
30RB										
Operating weight(1)										
Standard unit + desuperheater option	kg	2782	2987	3325	3571	3571	4102	4102	4351	4351
Unit with option 15LS/15LS+ + desuperheater option(2)	kg	2945	3168	3458	3724	3724	4276	4276	4545	4545
Unit with option 15LS/15LS+ + option 116W + desuperheater option(2)	kg	3179	3439	3768	4034	4034	4665	4665	4934	4934
Unit + option 15LS/15LS+ + option 116W + option 307 + desuperheater option(2)	kg	4171	4431	4775	5041	5041	5686	5686	5955	5955
30RBP										
Operating weight(1)										
Standard unit + desuperheater option	kg	2782	2987	3325	3571	3571	4102	4102	4351	4351
Unit with option 15LS/15LS+ + desuperheater option(2)	kg	2945	3168	3458	3724	3724	4276	4276	4545	4545
Unit with option 15LS/15LS+ + option 116W + desuperheater option(2)	kg	3179	3439	3768	4034	4034	4665	4665	4934	4934
Unit + option 15LS/15LS+ + option 116W + option 307 + desuperheater option(2)	kg	4171	4431	4775	5041	5041	5686	5686	5955	5955

(1) Weights are guidelines only. Refer to the unit name plate.
(2) Options: 15LS = Very low noise level, 15LS+= Ultra Low Noise, 116W = Variable-speed high pressure dual-pump hydraulic module, 307 = Water buffer tank module,

30RQ/RQP		165R	180R	210R	230R	270R	310R	330R	370R	400R	430R
Desuperheater on circuits A and C / B and D[a]		Brazed-plate heat exchanger									
Water volume of circuits A and C / B and D[a]	l	2 / 3,75	2 / 3,75	3,75 / 3,75	3,75 / 3,75	3,75 / 3,75	3,75 / 5,5	3,75 / 5,5	3,75 / 7,5	3,75 / 7,5	5,5 / 7,5
Maximum operating pressure, water side	kPa	1000	1000	1000	1000	1000	1000	1000	1000	1000	1000
Hydraulic connections		Victaulic									
Connection	in	2"	2"	2"	2"	2"	2"	2"	2"	2"	2"
External diameter	mm	60,3	60,3	60,3	60,3	60,3	60,3	60,3	60,3	60,3	60,3
30RQ/30RQP											
Operating weight[1]											
Standard unit + desuperheater option	kg	1651	1657	1873	1900	1906	2500	2558	2785	2791	3283
Unit with option 15LS/15LS+ + desuperheater option[2]	kg	1735	1741	1981	2009	2015	2626	2685	2930	2936	3446
Unit with option 15LS/15LS+ + option 116W + desuperheater option[2]	kg	1870	1876	2128	2156	2162	2821	2880	3164	3170	3681
Unit + option 15LS/15LS+ + option 116W + option 307 + desuperheater option[2]	kg	2853	2859	3111	3138	3144	3831	3889	4173	4179	4680

30RQ/RQP		470R	520R	570R	610R	680R	740R	800R	860R	940R	1040R
Desuperheater on circuits A and C / B and D[a]		Brazed-plate heat exchanger									
Water volume of circuits A and C / B and D[a]	l	5,5 / 7,5	7,5 / 7,5	7,5 / 11	11 / 11	11 / 11	3,75 / 7,5	3,75 / 7,5	5,5 / 7,5	5,5 / 7,5	7,5 / 7,5
Maximum operating pressure, water side	kPa	1000	1000	1000	1000	1000	1000	1000	1000	1000	1000
Hydraulic connections		Victaulic									
Connection	in	2"	2"	2"	2"	2"	2"	2"	2"	2"	2"
External diameter	mm	60,3	60,3	60,3	60,3	60,3	60,3	60,3	60,3	60,3	60,3
30RQ/30RQP											
Operating weight[1]											
Standard unit + desuperheater option	kg	3309	3565	4185	4815	4815	5570	5582	6567	6619	7130
Unit with option 15LS/15LS+ + desuperheater option[2]	kg	3472	3746	4324	4975	4975	5860	5872	6893	6945	7493
Unit with option 15LS/15LS+ + option 116W + desuperheater option[2]	kg	3744	4018	4616	5268	5268	6328	6340	7361	7487	8035
Unit + option 15LS/15LS+ + option 116W + option 307 + desuperheater option[2]	kg	4743	5017	5623	6289	6289	-	-	-	-	-

(1) Weights are guidelines only. Refer to the unit name plate.
(2) Options: 15LS = Very low noise level, 15LS+= Ultra Low Noise, 116W = Variable-speed high pressure dual-pump hydraulic module, 307 = Water buffer tank module.
(a) Circuits C and D only relate to sizes 620R to 1040R. These sizes are composed of 2 modules.

Dimensions/clearances

30RB/P - 30RQ/P

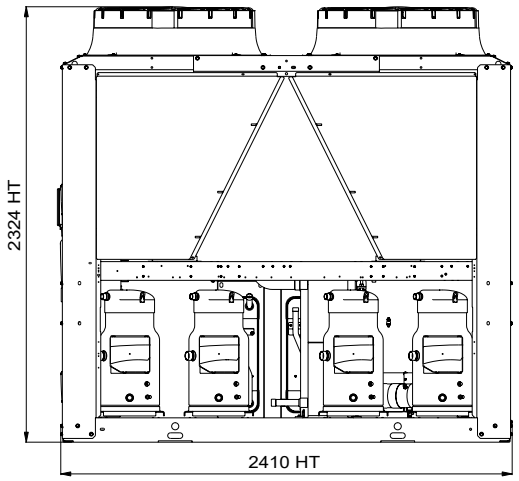

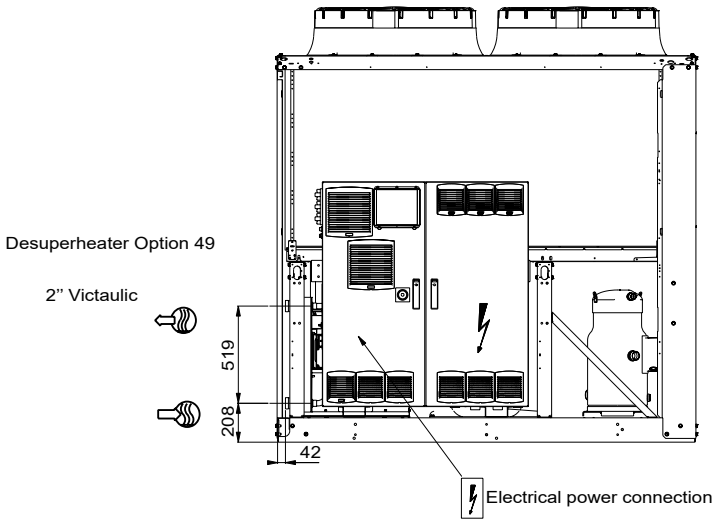

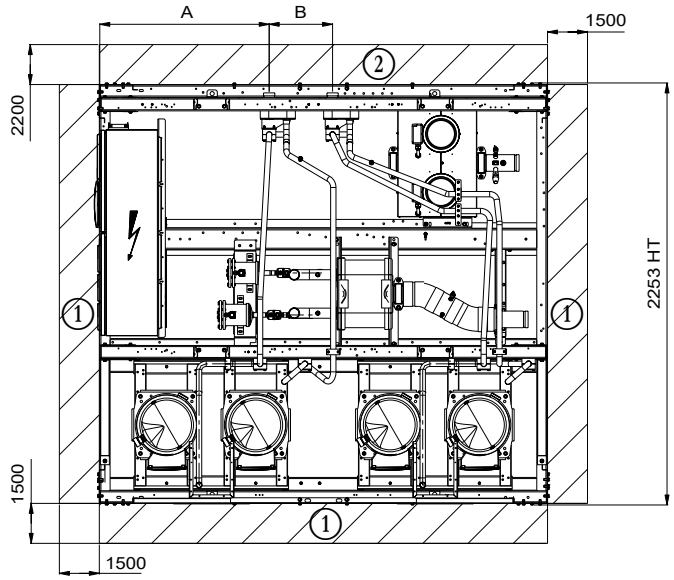

Key:
All dimensions are given in mm.

1. Clearances required for maintenance and air flow
2. Clearance recommended for coil removal

Water inlet
Water outlet
Air outlet, do not obstruct
Control box

NOTE: Non-contractual drawings.

When designing a system, refer to the certified dimensional drawings provided with the unit or available on request.

Refer to the certified dimensional drawings for the location of fixing points, weight distribution and coordinates of the centre of gravity, hydraulic and electrical connections.

Unit model					
30RB/30RBP	170R to 270R	310R to 410R	450R to 550R	610R to 720R	770R to 950R
30RQ/30RQP	165R to 270R	310R to 400R	430R to 520R	-	-
Length (mm)	3604	4798	5992	7186	8379

12.2.3.2 - Installation and operation of the heat recovery with desuperheater option

Units with the desuperheater option are supplied with one plate heat exchanger per refrigerant circuit.

When installing the unit, the heat recovery plate heat exchangers must be insulated and protected against frost if required.

Refer to the main diagram below for the main components or functions associated with a unit with desuperheater option in a standard system.

Typical installation diagram of units with the desuperheater option

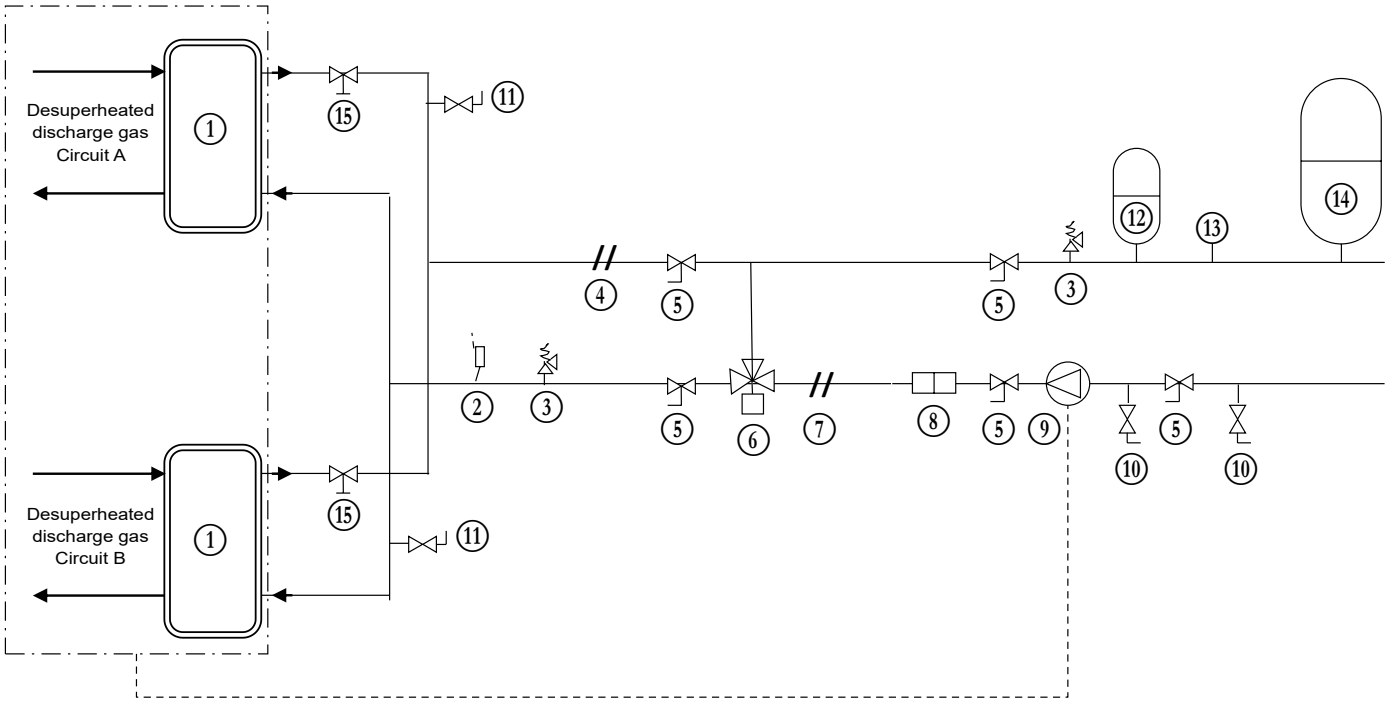

Integrated in the unit

Pump control if option 49 and 156 configured (wiring by the installer, refer to the unit wiring diagrams)

Key

Component installed on the unit

1 Plate heat exchanger (desuperheater condenser)

Installation components (installation example)

2 Flow rate controller
3 Safety valve
4 Water outlet temperature sensor kit (not supplied and not part of the unit control)
5 Shut-off valve
6 Three-way valve (essential for low water inlet temperature)
7 Water inlet temperature sensor kit (not supplied and not part of the unit control)
8 Filter to protect the pump and the heat recovery condenser
9 Desuperheater hydraulic circuit pump
10 Water circuit bleed or charging valve
11 Air vent
12 Expansion tank
13 Pressure gauge
14 Hot water tank
15 Desuperheater water flow balancing and control valve
16 Air vent

12.2.3.3 - Installation

The hydraulic supply for each desuperheater is delivered in parallel.

The hydraulic connection on the desuperheater water inlet and outlets must not generate any local mechanical stress on the exchangers. If necessary, install flexible couplings.

Fit water flow rate balancing and control valves at the exchanger outlet.

Balancing and control of the flow rates may be performed by reading the pressure drop in the exchangers.

The pressure drop on each of these must be identical to the total water flow rate given by the selection programme.

To adjust the balancing valves before starting up the system, refer to the pressure drop curves below.

It is possible to fine-tune the water flow rate settings for each desuperheater when the unit is running at full load by trying to obtain water outlet temperatures which are strictly identical for each of the circuits.

Desuperheater (plate heat exchanger pressure drop curves)

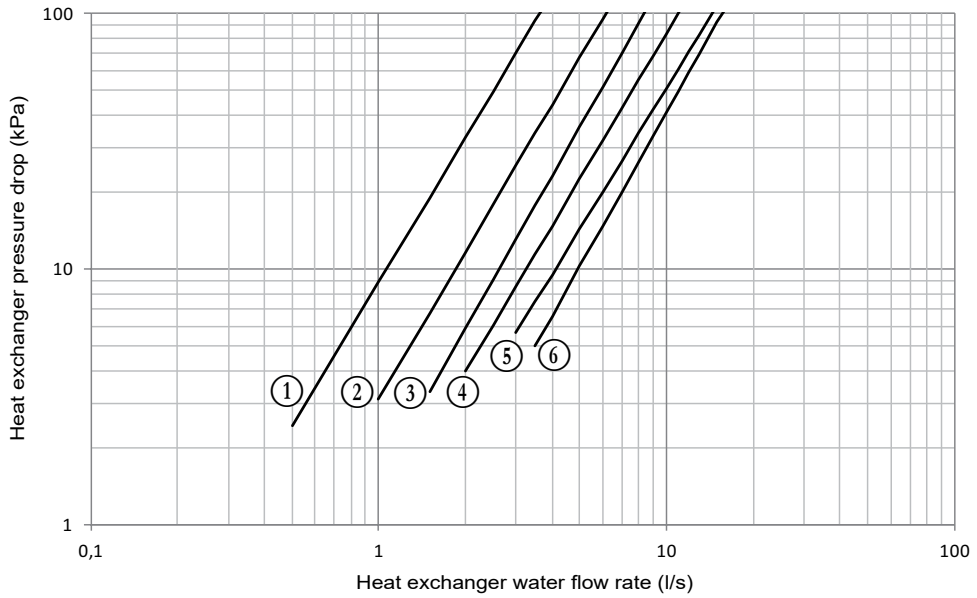

1. Circuit with 1 compressor (165-550 KW units)
2. Circuit with 2 compressors (165-550 KW units)
3. Circuit with 3 compressors (165-550 KW units)
4. Circuit with 4 compressors (165-550 KW units)
5. Circuit with 3 compressors (610-850 KW units)
6. Circuit with 4 compressors (610-850 KW units)

12.2.3.4 - Operation

Desuperheater mode is activated and deactivated by DI-04 on the CIOB B board (“DSHTR_SW”). (Customer terminal strip no.: 495/494)

If option 49 is associated with option 156 (energy management module – CIOB EMM board), the installer may connect a switch to the DO-01 of a pump for the desuperheater (item 9 - DSH_PUMP). (Customer terminal strip no.: 491/492).

The volume of the desuperheater circuit water loop must be as low as possible to be able to rapidly increase the temperature during warm-up.

The minimum desuperheater water inlet temperature is 30 °C.

This may require the use of a three-way valve (item 6), with its controller and sensor controlling the minimum required water inlet temperature.

The desuperheater water loop must include an expansion vessel selected on the basis of the water loop volume and a valve (calibrated to over 10 bar) to maintain the water temperature below 100 °C.

12.2.3.5 - Operating limits

30RB/RBP 170R-950R units

Desuperheater		Minimum	Maximum
Water inlet temperature at start-up	°C	30(1)	75
Water outlet temperature during operation	°C	45	80
Water inlet temperature on shut-down	°C	3	75

30RQ/RQP 165R-1040R units

Desuperheater		Minimum	Maximum
Water inlet temperature at start-up	°C	30(1)	60
Water outlet temperature during operation	°C	45	80
Water inlet temperature on shut-down	°C	3	60

Note: Do not exceed the maximum operating temperature.

(1) On start-up, the water inlet temperature must not be below 25 °C. On lower temperature installations, a 3-way valve is required until the desuperheater water outlet reaches 45 °C.

Cooling mode operating range

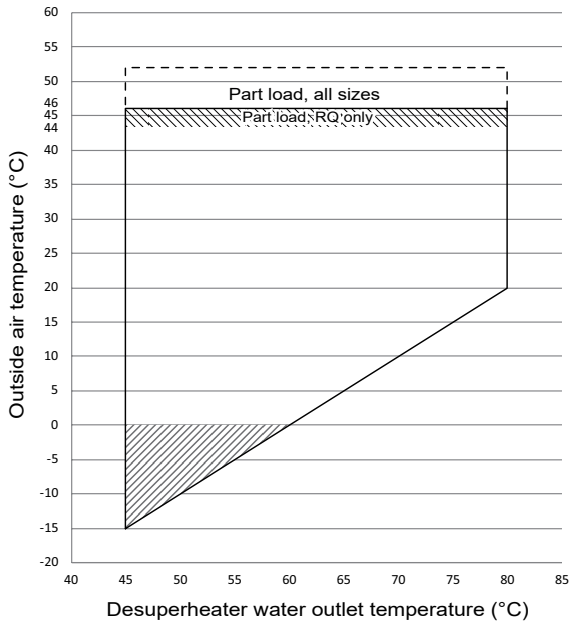

Heating mode operating range

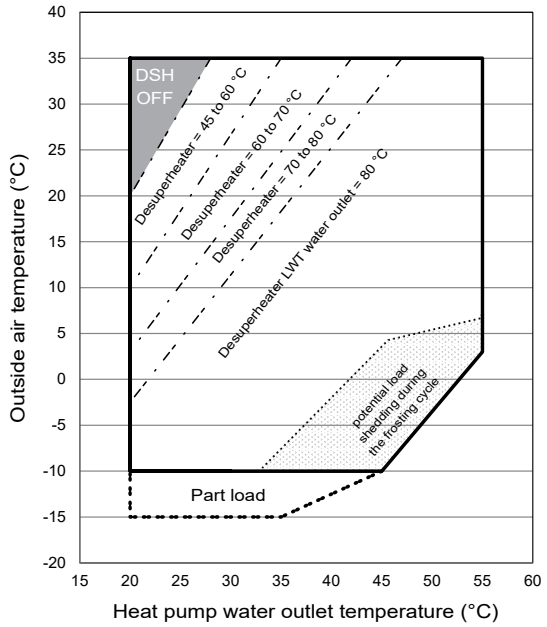

Notes

1. **Desuperheater water type heat exchanger ΔT = 10K.**
2. **The hydraulic and/or water type heat exchanger module must be must be protected against frost (option 41 or 42A or 42B) or the loop must be protected with by an antifreeze solution for outdoor temperatures < 0 °C.**
   However, the customer is responsible for protecting the desuperheater water type heat exchanger water loop at outdoor temperatures below 0 °C
3. **These ranges are guidelines only. Verify the operating range with the electronic catalogue.**

Key

- Operating range at full load
- Extension of the operating range, 30RBP/RQP unit: frost protection required (see note 2).
- Heating mode: part load at inlet air temperature between -10 and -15 °C.
  Cooling mode: Part load above an inlet air temperature of 46 °C.
  Limited desuperheater power.
- Operating range at part load for RQ only with limited desuperheater power.
- Potential load shedding before defrosting during the frosting cycle, depending on the humidity conditions.
  Limited desuperheater power. Please refer to the selection in the electronic catalogue.
- Desuperheater not operational
- Limited desuperheater water outlet temperature

12.2.4 - TOTAL HEAT RECOVERY (option 50)

Suitable for heating, domestic hot water production, agriculture and food industry, industrial processes and other hot-water requirements.

With the total heat recovery option it is possible to reduce the energy consumption bill considerably, when compared to conventional heating equipment such as fossil fuel boilers or electric water tanks.

Operating principle

If hot water production is required, the compressor discharge gases are directed towards the heat recovery condenser. The refrigerant releases its heat to the hot water that leaves the condenser at a temperature of up to 60 °C. In this way, 100% of the heat rejected by the liquid chiller can be used to produce hot water. The hot water temperature is controlled by the chiller's SmartVu™ control unit

NOTE: Heat recovery is only possible if the unit is producing cooling at the same time.

12.2.4.1 - Physical properties of units with total heat recovery

30RBP		170R	190R	210R	230R	270R	310R	340R	380R	410R	450R
Total recovery exchanger		Brazed-plate heat exchanger									
Water volume circuits A/B	l	20	24	24	29	29	31	31	31	31	44
Maximum operating pressure, water side	kPa	600	600	600	600	600	600	600	600	600	600
Hydraulic connections		Victaulic									
Connection	in	3"	3"	3"	3"	3"	4"	4"	4"	4"	4"
External diameter	mm	88,9	88,9	88,9	88,9	88,9	114,3	114,3	114,3	114,3	114,3
Operating weight(1)											
Standard unit + total recovery option	kg	1490	1580	1580	1740	1775	2300	2354	4561	2620	3084
Unit with option 15LS/15LS+ + total recovery option(2)	kg	1573	1663	1663	1849	1884	2427	2481	4706	2765	3247
Refrigerant(3)(4)		R32 / A2L / GWP=675 as per AR4									
Circuit A	kg	11,5	13,7	13,7	19,3	19,7	20,0	20,8	28,7	29,3	30,4
	tCO_2e	7,8	9,2	9,2	13,0	13,3	13,5	14,0	19,4	19,8	20,5
Circuit B	kg	16,2	19,2	19,2	19,3	19,7	28,1	28,9	28,7	29,3	33,0
	tCO_2e	10,9	13,0	13,0	13,0	13,3	19,0	19,5	19,4	19,8	22,3

30RBP		480R	550R	610R	670R	720R	770R	800R	870R	950R
Total recovery exchanger		Brazed-plate heat exchanger								
Water volume circuits A/B	l	44	44	61	61	61	61	61	61	61
Maximum operating pressure, water side	kPa	600	600	600	600	600	600	600	600	600
Hydraulic connections		Victaulic								
Connection	in	4"	4"	5"	5"	5"	5"	5"	5"	5"
External diameter	mm	114,3	114,3	139,7	139,7	139,7	139,7	139,7	139,7	139,7
Operating weight(1)										
Standard unit + total recovery option	kg	3110	3315	3848	4093	4093	4627	4627	4876	4876
Unit with option 15LS/15LS+ + total recovery option(2)	kg	3273	3496	3981	4246	4246	4801	4801	5070	5070
Refrigerant(3)(4)		R32 / A2L / GWP=675 as per AR4								
Circuit A	kg	30,7	33,9	41,8	43,2	43,2	44,7	44,7	50,9	50,9
	tCO_2e	20,7	22,8	28,2	29,2	29,2	30,2	30,2	34,3	34,3
Circuit B	kg	33,4	33,9	43,2	43,2	43,2	50,9	50,9	50,9	50,9
	tCO_2e	22,5	22,8	29,2	29,2	29,2	34,3	34,3	34,3	34,3

(1) Weights are guidelines only. Refer to the unit name plate.
(2) Options: 15LS = Very low sound level, 15LS+= Ultra Low Noise.
(3) Values are guidelines only. Refer to the unit name plate.
(4) For a combination of option 50 and 6B, refer to the unit name plate

Dimensions/clearances

30RBP

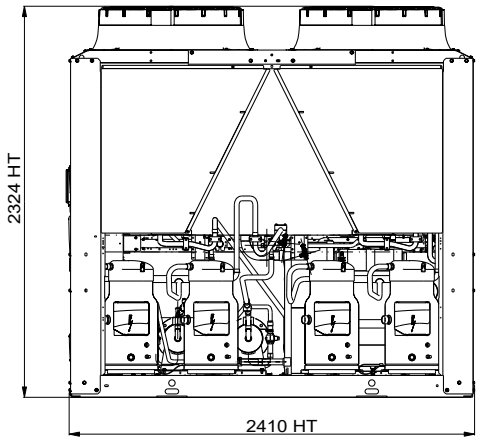

Total recovery Option 50

2" Victaulic

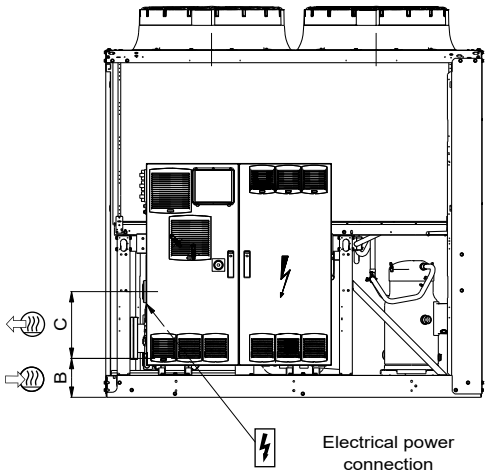

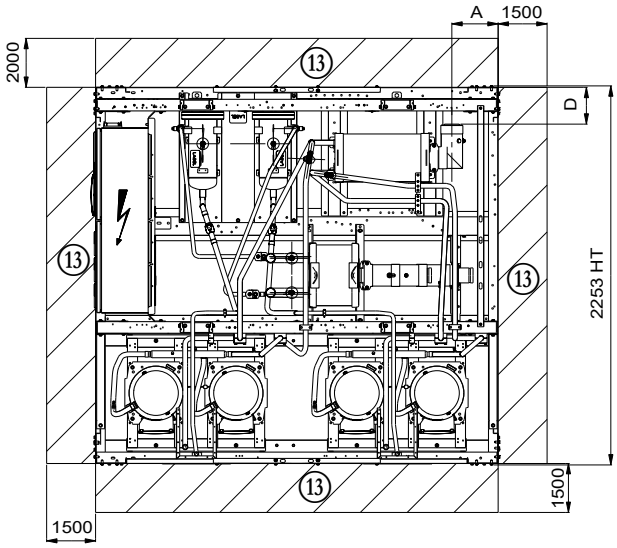

Key:
All dimensions are given in mm.

- (13) Required space for maintenance
- Water inlet
- Water outlet
- Air outlet, do not obstruct
- Control box

NOTE: Non-contractual drawings.

When designing a system, refer to the certified dimensional drawings provided with the unit or available on request.

Refer to the certified dimensional drawings for the location of fixing points, weight distribution and coordinates of the centre of gravity, hydraulic and electrical connections.

	Unit model						
30RBP	170R	190R - 210R	230R - 270R	310R - 410R	450R - 550R	610R - 720R	770R - 950R
Length (mm)	2410			3604	4798	5992	7186
Length A (mm)	437	384	273	538	1272	1992	3064
Length B (mm)	231			266			
Length C (mm)	397			492		431	
Length D (mm)	126			157		36	

12.2.4.2 - Total heat recovery operation

Total heat recovery system:

For this option, a dual-circuit plate heat exchanger is installed in series on air-cooled condensers on the compressor discharge line on each circuit. The refrigerant flow always passes through the recovery exchanger, ensuring hot water is produced as soon as the unit is operating. Refrigerant accumulators enable the machine's performance to be optimised in all operating modes.

Since there is no isolation valve or solenoid valve on the refrigerant circuit, hot water production is switched off by actuating a three-way valve and/or a variable flow pump on the hot water hydraulic circuit. (See the control manual)

Variable water flow control:

Heat recovery mode is activated or deactivated using a digital input (see the control manual).

A 0-10 V output is available on the unit electronic board to control either a three-way valve connected to a fixed speed pump or just a variable flow pump. The control regulates the temperature by adapting the water flow which passes through the heat recovery condenser and the air speed in the air-cooled condenser.

It is very much not recommended to suddenly stop or increase the water flow rate at the heat recovery exchanger terminal.

A three-way valve or a variable flow pump must be installed to ensure a smooth transition between recovery mode and standard mode.

This control also guarantees a minimum entering water temperature when the recovery is started up, to protect the compressors from a low condensing temperature. (See the control manual)

Frost protection:

The low water temperature cutout option (41C) for the condenser with heat recovery comprises electrical heaters which are activated if the outdoor air temperature is below 3 °C and if the machine is not running. The heat recovery circuit pump is then activated.

A flow switch allows start-up problems with the pump to be detected, and prevents the BPHE freezing.

Note:

- **If the heat recovery is not used during the winter, it is preferable that the water circuit is drained.**
- **If there is glycol in the hot water loop, it is possible to configure it and deactivate the frost protection on the water-cooled condenser side**

Operation in cooling mode only (without heat recovery):

During standard operation, the heat recovery condenser is subject to the outlet gas from the compressors which can reach temperatures of above 100 °C. This phenomenon could eventually cause damage to the components of the heat recovery hydraulic circuit. To prevent this, water circulation is activated (actuation of the pump and/or opening of the three-way valve) to keep this temperature below 95 °C. Above this temperature, an alarm is triggered and the machine stops.

To prevent this alarm being triggered, it is recommended that for prolonged operation in cooling mode only without any heat recovery (during the summer, for example):

- The heat recovery water loop is drained and the heat recovery demand deactivated.
- Or, the heat transmitted to the hydraulic circuit is constantly either being used or rejected.

Note: Due to the risk of burns, the heat recovery condenser and the hydraulic piping are delivered with insulation. The installer is responsible for ensuring the safety of anyone working on these components.

12.2.4.3 - Installation and hydraulic connection of the condenser

The unit is delivered with two temperature sensors and a flow rate controller which control the heat recovery.

The water flow controller is installed on the heat recovery unit water inlet and there is a sensor at the outlet. The water inlet sensor is supplied with a maximum cable length of 15 metres which may be installed after the three-way valve (see diagram below).

It is recommended that the water inlet temperature sensor is placed as shown in the diagram below to guarantee optimal control of the hot water temperature.

Note:

- **The water temperature can be controlled on the exchanger inlet or outlet when actuated by a three-way valve but on the water inlet only when actuated by a pump. (see the control manual)**
- **The installation of a three-way valve or a variable speed pump ensures optimum performance of the control whilst protecting the compressors from very low water inlet temperatures.**

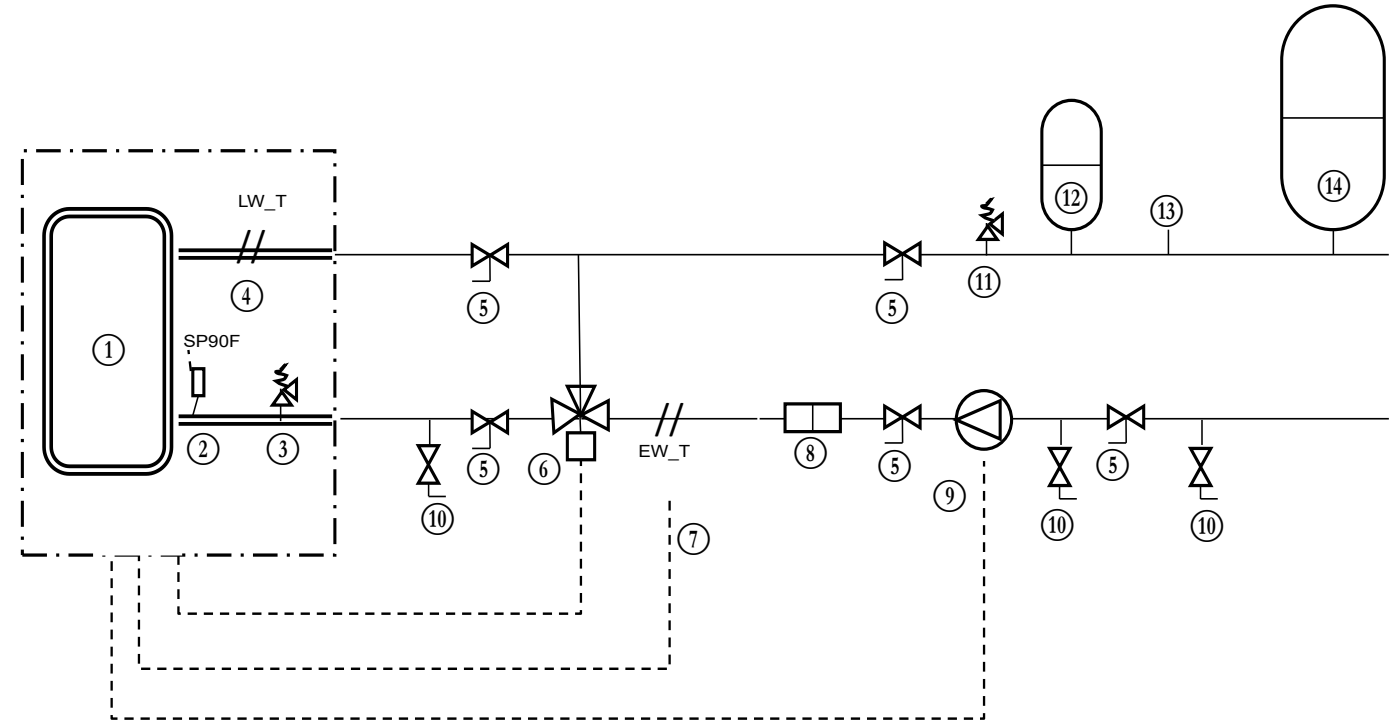

Integrated in the unit
Actuation by controlling the unit if option 50 configured.
Insulation (integrated in the unit)

Components fitted on the unit

1. Heat recovery condenser
2. Flow rate controller
3. Safety relief valve
4. Water outlet temperature sensor

Installation components (installation example)

5. Shut-off valve
6. Three-way valve (recommended and essential for low water inlet temperature)
7. Water inlet temperature sensor (supplied with the machine with 15 metres of cable and a sensor pocket (contact paste to be added by the installer))
8. Filter to protect the pump and the heat recovery condenser
9. Heat recovery hydraulic circuit pump
10. Water circuit bleed or charging valve
11. Safety relief valve
12. Expansion tank
13. Pressure gauge
14. Hot water tank

Total recovery (pressure drop curves for the plate heat exchangers)

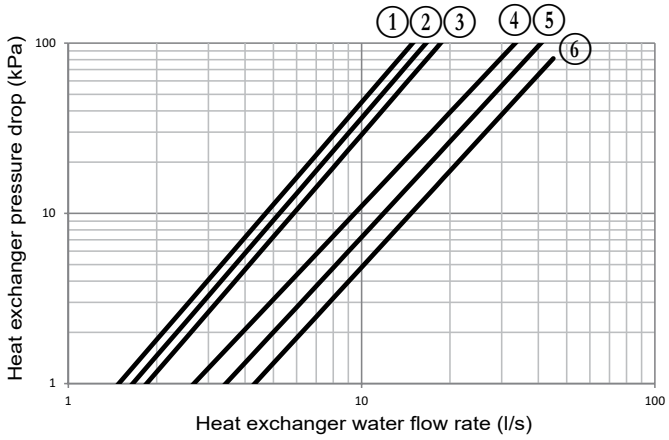

1. 30RBP 170R
2. 30RBP 190R-210R
3. 30RBP 230R-270R
4. 30RBP 310R-410R
5. 30RBP 450R-550R
6. 30RBP 610R-950R

12.2.4.4 - Operating limits

30RBP 170R-950R units

Total recovery exchanger		Minimum	Maximum
Water inlet temperature at start-up	°C	25(1)	60
Water outlet temperature during operation	°C	30	65
Water inlet temperature on shut-down	°C	3	70

Note: Do not exceed the maximum operating temperature.
(1) On start-up, the water inlet temperature must not be below 25 °C. For installations with a lower temperature, a three-way valve is necessary

Operating range in cooling mode

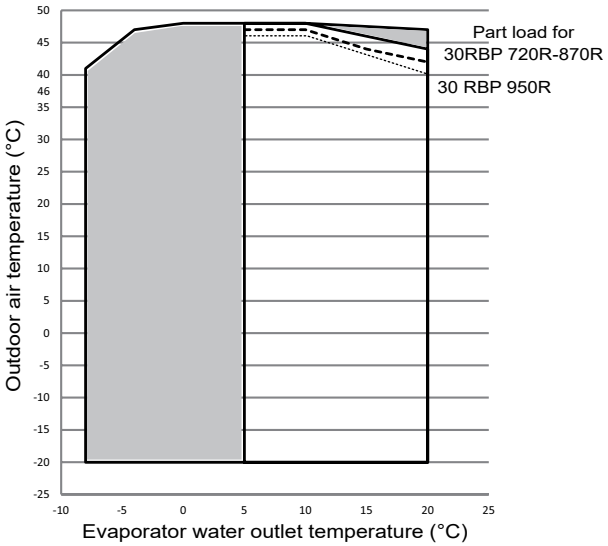

Key

- Full load
- Low temperature brine solution option
- Part load for RBP720R-870R
- Part load for RBP950R

Notes

1. **Evaporator ΔT = 5K.**
2. **The unit must be either equipped with frost protection options for the water type heat exchangers (evaporator and heat recovery) and the hydraulic module (if used), or the water loop must be protected against freezing by the installer with an antifreeze solution**
3. **These ranges are guidelines only. Verify the operating range with the electronic catalogue.**

Operating range in heat recovery mode

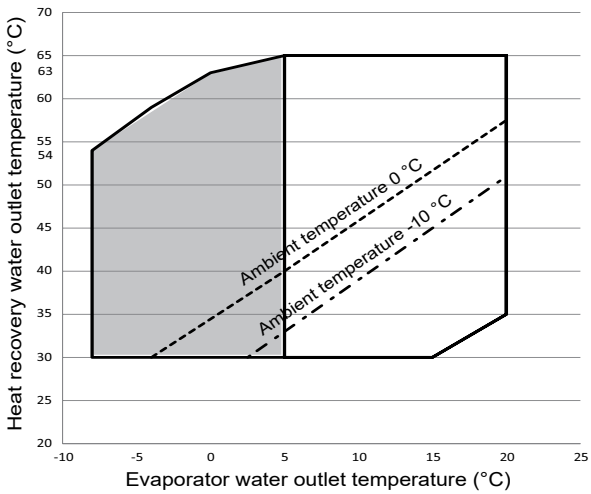

Key

- Full load
- Low temperature brine solution option
- Limitation to a part load of 50% below an ambient air temperature of -10 °C Averaged values. Check the electronic catalogue for details of each unit
- Limitation to a part load of 50 % below an ambient air temperature of 0 °C Averaged values. Check the electronic catalogue for details of each unit

Notes

- **Evaporator ΔT = 5K**
- **Condenser ΔT = 5K minimum up to 30RBP550 and 8K minimum for sizes 610R to 950R**
- **These operating ranges are guidelines only. Verify the operating range with the electronic catalogue.**

12.2.5 - Operation of two units in a Lead/Lag assembly

The customer must connect both units with a communication bus using a 0.75 mm² twisted, shielded cable (contact the manufacturer's Service for the installation).

All the parameters required for the Lead/Lag function must be configured using the Service configuration menu.

All remote controls of the Lead/Lag assembly (start/stop, setpoint, load shedding, etc.) are managed by the unit configured as the Lead and must only be applied to the Lead unit.

Units supplied with hydraulic module

Lead/Lag operation is possible only when the units are installed in parallel:

- The Lead/Lag assembly is controlled on the water inlet without any additional sensors (system return) (see Example 1).
- This can also be done on the water outlet with the addition of two additional sensors on the common pipe (see Example 2).

Each unit controls its own water pump.

Units supplied without hydraulic module

In the case of units installed in parallel, and if there is only one common pump installed by the installer, isolating valves must be installed on each unit. These should be controlled (opened and closed) using the control for the relevant unit (valves for each unit can be controlled using the water pump control outputs). Refer to the control manual for the connections.

In this case, a variable-speed pump must be controlled by the unit via the 0-10 V dedicated output of the Lead unit (control on Delta T° only).

Installation in series is only possible with a fixed-speed pump (see Example 3):

- The operation of the pump will be controlled by the Lead unit.
- The Lead/Lag assembly is controlled on the water outlet without additional sensor.
- The installation must be carried out only by following the diagram provided in Example 3.

IMPORTANT:

Both units must be equipped with an option to allow Lead/Lag operation.

If one or both units is equipped with the variable-speed pump option, it is strongly recommended not to set the control mode on the pressure differential. It is recommended to configure the temperature differential mode with the same setpoint.

Example 1: Operation in parallel - control on water inlet for a hydraulic module

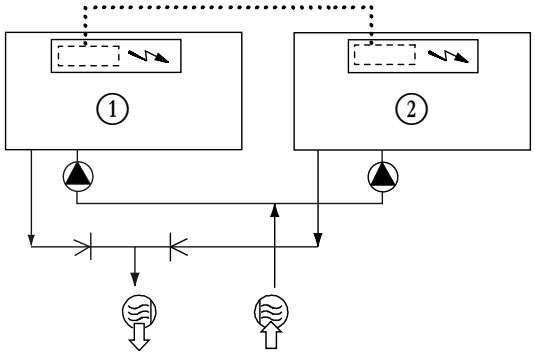

Example 2: Operation in parallel - control on water outlet for a hydraulic module

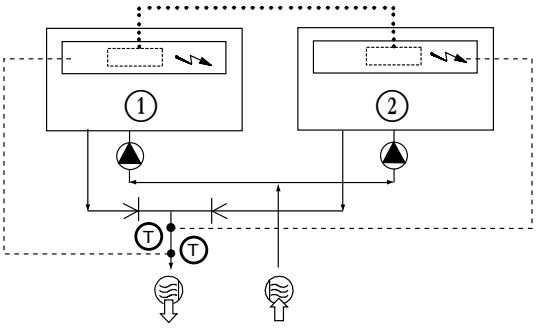

Example 3: Operation in series - control on water outlet for a unit assembly

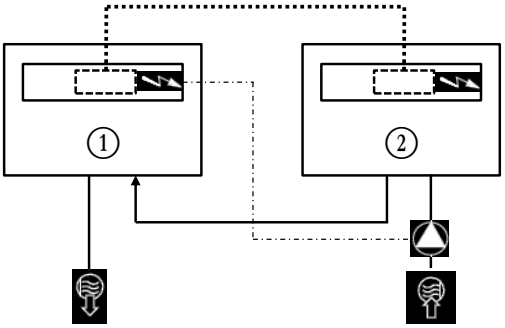

Key:
All dimensions are given in mm.

- 1 Lead unit
- 2 Lag unit
- Water inlet
- Water outlet
- Control boxes of the Lead and Lag units
- Water pumps for each unit (normally included in the units with hydraulic module)
- T Additional sensor for water outlet control, to be connected to channel 1 of the Lag boards of each Lead and Lag unit
- •••• CCN communication bus
- ..... Connection of two additional sensors
- Non-return valve

12.2.6 - Brine option (Option 6B)

Brine production from 5°C to -8 °C is only possible with the low-temperature brine solution option (6B).

The unit is equipped with insulation on the intake tubes. The insulation is reinforced on the low-temperature brine solution option.

The operating range is based on:

- The size of the machine,
- The type of glycol,
- Its concentration,
- The flow rate,
- The temperature of the glycol solution,
- The condensing pressure (ambient temperature).

Operating range

- Low water temperature brine solution (ethylene glycol or propylene glycol)

Operating range Standard unit

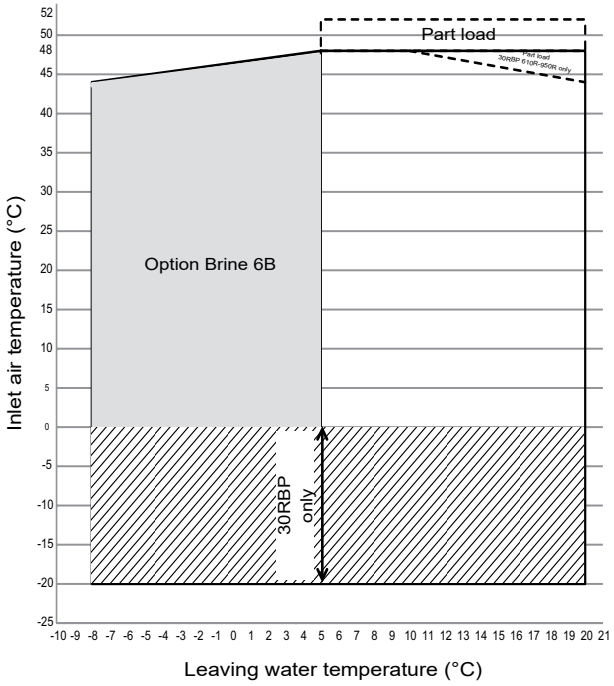

Operating range Unit option 15LS/15LS+

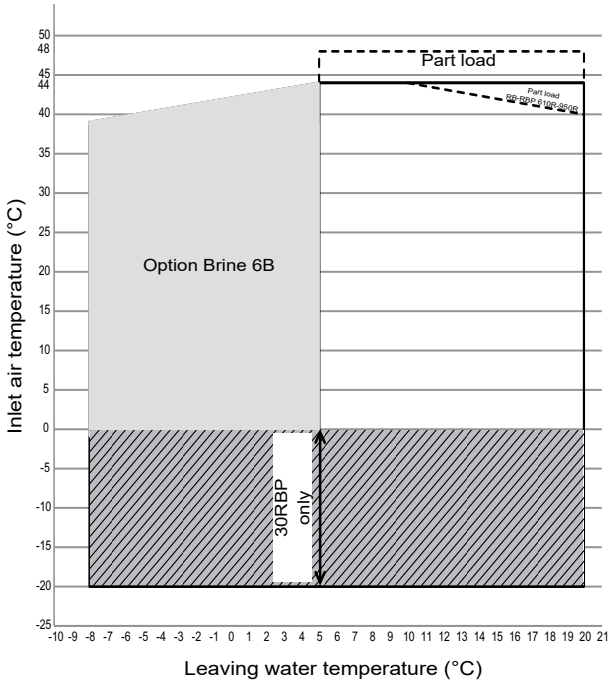

1. Water type heat exchanger ΔT = 5K.
2. The hydraulic and/or water type heat exchanger module must be must be protected against frost (option 41 or 42A or 42B) or the loop must be protected by an antifreeze solution for outdoor temperatures < 0 °C.
3. These ranges are guidelines only. Verify the operating range with the electronic catalogue.

Key

- Operating range at full load
- Extension of the operating range, 30RBP unit: Frost protection required (see note 2).
- Operating range of units at part load
- Extension of the operating range, unit with option 6B

Refrigerant charge for the low-temperature brine solution option

30RB/RBP		170R	190R	210R	230R	270R	310R	340R	380R	410R	450R
Refrigerant(1)											
Circuit A	kg	4,9	7,4	7,4	8,6	8,6	10,8	11,5	15,6	16,2	16,5
	tCO_2e	3,3	5,0	5,0	5,8	5,8	7,3	7,8	10,5	10,9	11,1
Circuit B	kg	8,6	8,6	8,6	8,6	8,6	15,1	15,8	15,6	16,2	19,7
	tCO_2e	5,8	5,8	5,8	5,8	5,8	10,2	10,7	10,5	10,9	13,3

30RB/RBP		480R	550R	610R	670R	720R	770R	800R	870R	950R
Refrigerant(1)										
Circuit A	kg	30,2	20,5	19,7	20,9	20,9	22,5	22,5	26,6	26,6
	tCO_2e	20,4	13,8	13,3	14,1	14,1	15,2	15,2	18,0	18,0
Circuit B	kg	32,4	20,5	20,9	20,9	20,9	26,6	26,6	26,6	26,6
	tCO_2e	21,9	13,8	14,1	14,1	14,1	18,0	18,0	18,0	18,0

(1) For a combination of option 50 and 6B, refer to the unit name plate.

Frost protection

The protection provided to the evaporator against low pressure and frost depends on the amount of antifreeze in the water loop.

The evaporator pinch (LWT – SST) and the frost protection depend on this level.

It is therefore crucial to check the amount of antifreeze in the loop carefully during the initial system start-up (allow it to circulate for 30 minutes to check that the mixture is homogeneous before sampling).

Refer to the manufacturer's data to define the frost protection, based on the measured concentration amount.

The minimum temperature for frost protection must be entered in the parameters on the unit's controller.

This value will enable the following limits to be defined:

1. Evaporator frost protection.
2. Low pressure protection.

For information, based on the antifreeze solutions used in our laboratories, the protection values provided by our supplier are as follows (these values may change depending on the supplier):

It is therefore recommended that a low temperature installation be commissioned by the manufacturer.

Required glycol concentration

Freezing curve for Ethylene and Propylene glycol

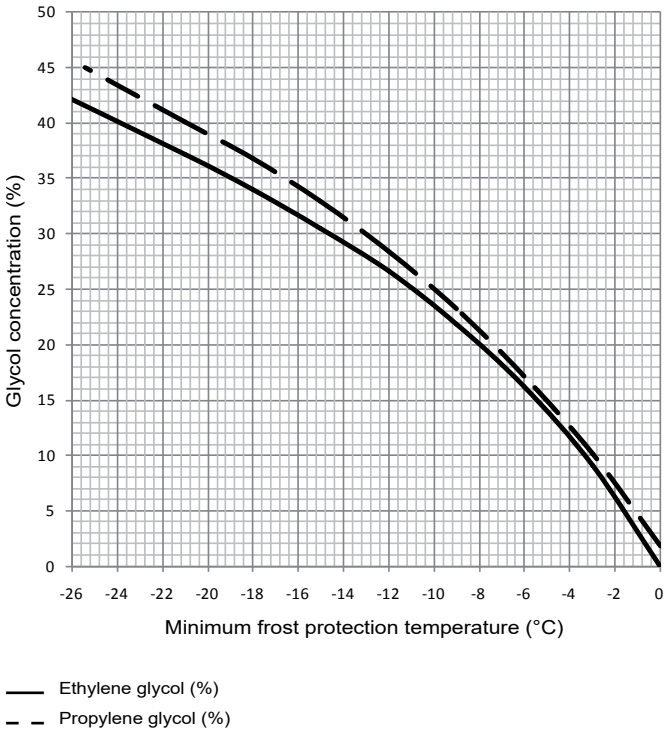

Minimum frost protection temperature to be observed based on the water outlet temperature.

Minimum frost protection temperature based on the water outlet temperature (example)

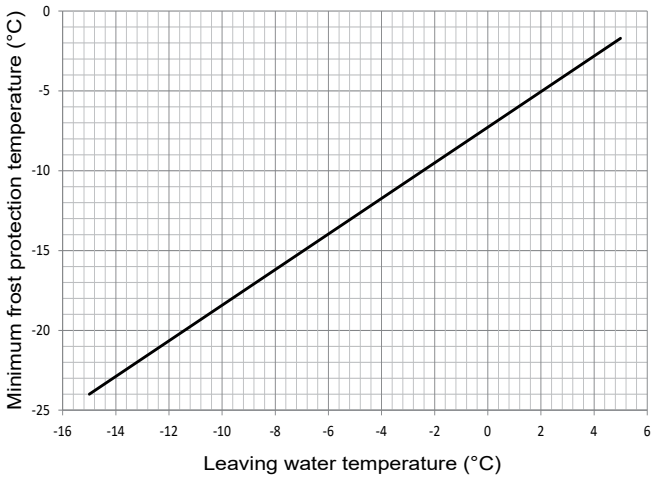

For example, based on the above curves, if the ethylene glycol mass concentration measured in the loop is 30%, the frost protection temperature value of -14.8 °C must be entered in the software. This corresponds to a minimum water outlet temperature of -6.7 °C. The control point must be added as a result.

IMPORTANT:

- ***It is vital to check the glycol content at least once a year and adjust the software's frost protection based on the measured level.***
- ***This procedure must be performed systematically if water or antifreeze solution is added.***
- ***Observe the minimum frost protection temperature based on the water outlet temperature.***

NOTE:

- **In the case of frost protection of the unit by low air temperature, the percentage brine must be evaluated accordingly.**
- **The maximum glycol content for units equipped with a hydraulic module is 45%.**
- **The maximum recommended temperature differential is 5 K.**
- **To facilitate maintenance operations, it is recommended that isolation valves are installed upstream and downstream of the machine**

12.2.7 - Units with fans with available pressure (Option 12)

The design of this range using R32, is intended for outdoor installation. More more details on the various installation scenarios, refer to the installation guide for A2L refrigerants. Units with fans with available pressure are designed to be ducted to the fan discharge which results in pressure drops in the air circuit.

It is for this reason that more powerful fan motors are installed for this option.

For each installation, the duct pressure drops differ, depending on the duct length, the duct section and the changes in direction.

Ductable units equipped with this option are designed to operate with ducts whose air evacuation generates a maximum pressure drop of 200 Pa.

Using a speed variation up to 19 rps enables the system to overcome the pressure drops in the ducts while maintaining an optimised air flow in each circuit.

All the fans in the same circuit run at the same time at the same speed.

In the cooling/heating mode, the full load or part load speed is controlled by a patented algorithm that permanently optimises the condensation/evaporation temperature to ensure the best unit energy efficiency (EER/COP) whatever the operating conditions and pressure drop of the duct network.

If required by a specific installation, the unit's maximum fan speed can be configured in the Service Configuration menu. Refer to the control manual.

The maximum configured speed applies to both the cooling and heating modes.

The performances (capacity, efficiency, noise level) depend on the fan speed and the duct network. Please refer to the manufacturer's electronic catalogue to evaluate the estimated impact of the ducting system on the unit's operating conditions.

12.2.7.1 - Specific installation in ductable units

The rotation speed of all the fans in the same circuit is controlled in the same way.

Therefore each circuit operates independently.

Each refrigerant circuit must have an independent network of ducts to prevent any recycling of air between the air-cooled exchangers of different refrigerant circuits.

On ductable units, each fan is equipped with a factory-fitted connection interface frame providing a link between the duct network itself and the refrigerant circuit to which the fan belongs.

Refer to the dimensional plans of the units for the precise dimensions of this connection interface.

Please refer to the chapter ‘‘Arrangement of fans’’ to assign each fan to their own circuit.

Specific data 30RQP

IMPORTANT: When the 30RQP units operate in heating mode, dehumidification of the air and defrosting of the air heat exchangers generate a large amount of condensate that must be evacuated from the unit installation site.

30RQP units must be installed on a waterproof base enabling efficient drainage and evacuation of the condensate from the exchangers.

At low ambient temperature, when the exchangers form frost, the defrost water must be collected to ensure that there is no risk of flooding of the area where the units are installed.

12.2.7.2 - Nominal and maximum air flow rate per circuit and per unit type

30RBP	Rated air flow rate(1) (l/s)	Maximum air flow rate(2) (l/s)
170R	13500	20160
190R	18220	26880
210R	18110	26880
230R	18010	26880
270R	17770	26880
310R	22370	33600
340R	22180	33600
380R	26810	40320
410R	26610	40320
450R	31230	47040
480R	31050	47040
550R	35490	53760
610R	39990	60480
670R	44470	67200
720R	44200	67200
770R	48710	73920
800R	48570	73920
870R	52970	80640
950R	52620	80640

30RQP	Rated air flow rate(1) (l/s)	Maximum air flow rate(2) (l/s)
165R	16320	18720
180R	16320	18720
210R	21760	24960
230R	21760	24960
270R	21760	24960
310R	27200	31200
330R	27200	31200
370R	32640	37440
400R	32640	37440
430R	38080	43680
470R	38080	43680
520R	43520	49920
570R	54400	62400
610R	65280	74880
680R	65280	74880
740R	65280	74880
800R	65280	74880
860R	76160	87360
940R	76160	87360
1040R	87040	99840

(1) The rated air flow rate is set in accordance with Eurovent 12/7 - 35 °C, with an operating pressure of 160 Pa.

(2) The maximum air flow rate corresponds to the maximum obtainable by these fans (maximum speed, operating pressure = 0 Pa)
These values are given for illustrative purposes only. The actual and up-to-date flow rates based on the condition are indicated via the selection on the electronic catalogue.

12.2.7.3 - Air connection on discharge

Refer to the dimensional plans of the units for the precise dimensions of the connection interface.

12.2.7.4 - Factory-installed duct connection interface on each fan

V-type air-cooled exchangers

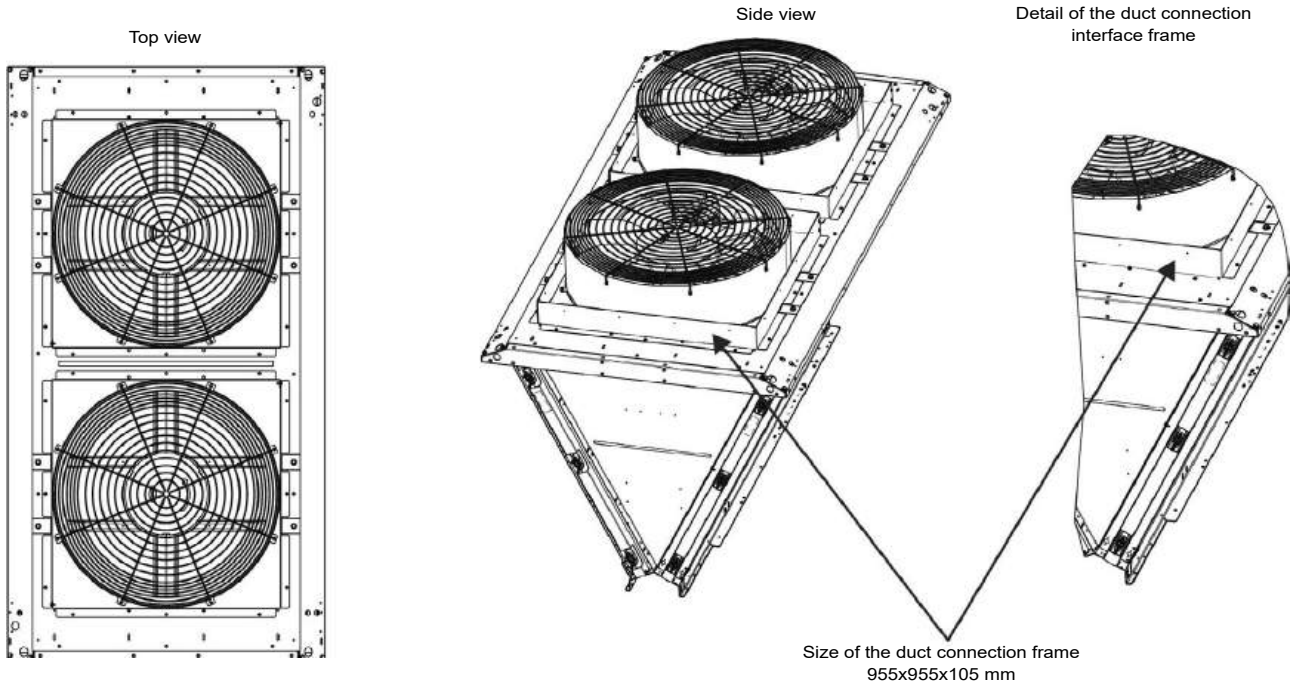

12.2.7.5 - Duct installation principle

Solution 1
Each fan has its own duct

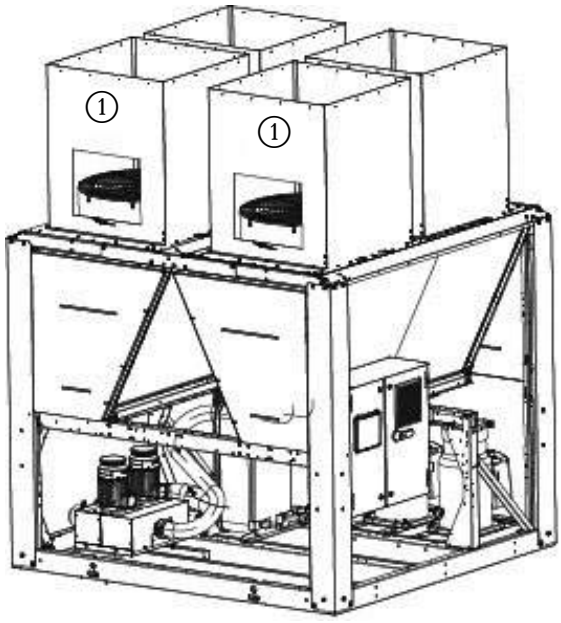

Solution 2
2 fans can share the same duct

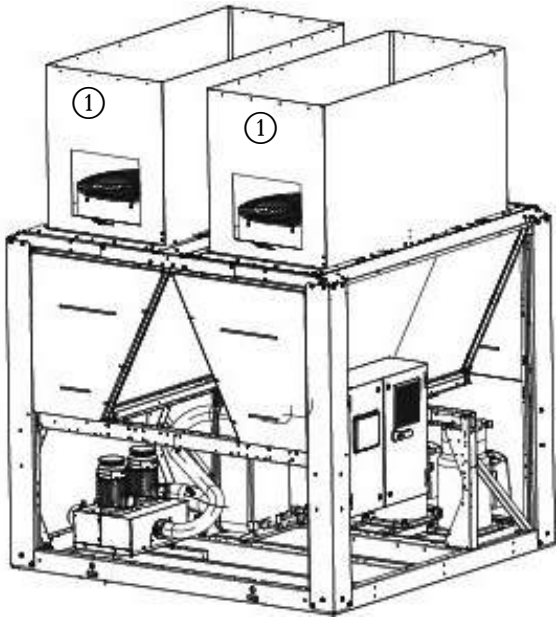

(1) Fan motor access hatches (install a 700 x 700 mm hatch) for each single and dual duct

Rules for a correct duct network

- Each duct must serve a maximum of 2 fans – DO NOT EXCEED this limit.
- In case of multiple fans in the same duct, they must belong to the same refrigerant circuit and to the same V coil system – DO NOT MIX refrigerant circuits or V coil systems in the same duct.

IMPORTANT:

The duct connections on the units must not generate any mechanical stress on the fan supporting structure.

The fan shrouds and the fan protection grilles must always remain in their position inside the ducts.

Use bellows or flexible sleeves for the duct connection.

At the start of each duct, install an access hatch measuring at least 700 x 700 mm to allow maintenance of fan components (motor replacement, removal of impeller).

Fan motor electrical protection

In case of a locked rotor or an overload, the motors of each circuit are electrically protected by the circuit variable speed drive.

Each drive follows a variable current characteristic, based on the frequency from 10 to 60 Hz and the number of controlled fans.

If a fan stops working, the variable drive will automatically detect the malfunction.

Refer to the control manual for the list of alarms specific to this option.

12.2.8 - TOTAL/PARTIAL FREE COOLING Glycol Free (Option 305A / 305B / 305C)

Reducing operating costs and protecting the environment have become the key concerns, both for air conditioning applications, and for industrial processes and cooling data centres.

The Free Cooling option allows significant energy savings to be made in all applications that require cooling throughout the year, particularly when used in colder climates. In these regions, Free Cooling can be used to fulfil a large proportion of the cooling requirements both economically and in a way that respects the environment.

Operating principle

When the outdoor air temperature is lower than the setpoint temperature, the Free Cooling hydraulic system can be used to cool the customer loop by allowing fluid to circulate in the micro-channel coils, positioned in parallel with the MCHE condensers. With this type of operation, it is possible to save energy when outdoor temperatures are low.

Hydraulic Free Cooling is available as 2 options:

- 305A: Total hydraulic Free Cooling: the FC coils are built into each condenser on two refrigerating circuits (available in glycol-based process circuit version or Glycol-Free process circuit version supplied using pure water).
- 305B: Partial hydraulic Free Cooling: the FC coils are built into the condensers on a single refrigerating circuit.

Advantage of the Free Cooling Glycol-Free system

In applications or countries in which the use of glycol is strictly regulated or banned, the Free Cooling Glycol-Free option is equipped with a separation heat exchanger, and only the circuit inside the unit contains glycol, while the user circuit contains pure water.

This solution with an intermediate exchanger shifts the Free Cooling mode activation thresholds by a few degrees, and the heat exchangers selected by Carrier help to minimise this shift.

12.2.8.1 - Physical properties of units with total free cooling (305A) and partial free cooling (305B)

30RBP		170R	190R	210R	230R	270R	310R	340R	380R	410R	450R
Free cooling Total - Option 305A											
Free cooling coil		All-aluminium micro-channel coils (MCHE)									
Quantity		3	4	4	4	4	5	5	6	6	7
Hydraulic connection											
Connection	in	3"	3"	3"	3"	3"	4"	4"	4"	4"	4"
External diameter	mm	88,9	88,9	88,9	88,9	88,9	114,3	114,3	114,3	114,3	114,3
Additional water volume	l	60	72	72	72	72	113	113	126	126	200
Weight(1)											
Additional weight (without water)	kg	262	316	316	316	316	444	447	496	498	652
Additional weight (during operation)	kg	324	391	391	391	391	562	565	627	629	861
Operation											
Max. operating pressure, water side (without pump)	kPa	600	600	600	600	600	600	600	600	600	600
Max. operating pressure, water side (with pump)	kPa	400	400	400	400	400	400	400	400	400	400
Partial Free Cooling - Option 305B											
Free cooling coil		All-aluminium micro-channel coils (MCHE)									
Quantity		2	2	2	2	2	2	2	3	3	3
Hydraulic connection											
Connection	in	3"	3"	3"	3"	3"	4"	4"	4"	4"	4"
External diameter	mm	88,9	88,9	88,9	88,9	88,9	114,3	114,3	114,3	114,3	114,3
Additional water volume	l	48	48	48	48	48	58	58	75	75	101
Weight(1)											
Additional weight (without water)	kg	204	204	204	204	205	260	261	310	312	380
Additional weight (during operation)	kg	253	253	253	253	254	321	322	388	390	485
Operation											
Max. operating pressure, water side (without pump)	kPa	600	600	600	600	600	600	600	600	600	600
Max. operating pressure, water side (with pump)	kPa	400	400	400	400	400	400	400	400	400	400

30RBP		480R	550R	610R	670R	720R	770R	800R	870R	950R
Free cooling Total - Option 305A										
Free cooling coil		All-aluminium micro-channel coils (MCHE)								
Quantity		7	8	9	10	10	11	11	12	12
Hydraulic connection										
Connection	in	4"	4"	5"	5"	5"	5"	5"	5"	5"
External diameter	mm	114,3	114,3	139,7	139,7	139,7	139,7	139,7	139,7	139,7
Additional water volume	l	200	213	298	310	310	351	351	364	364
Weight(1)										
Additional weight (without water)	kg	652	704	861	911	911	1044	1044	1093	1093
Additional weight (during operation)	kg	861	926	1171	1234	1234	1410	1410	1472	1472
Operation										
Max. operating pressure, water side (without pump)	kPa	600	600	600	600	600	600	600	600	600
Max. operating pressure, water side (with pump)	kPa	400	400	400	400	400	400	400	400	400
Partial Free Cooling - Option 305B										
Free cooling coil		All-aluminium micro-channel coils (MCHE)								
Quantity		3	4	4	5	5	5	5	6	6
Hydraulic connection										
Connection	in	4"	4"	5"	5"	5"	5"	5"	5"	5"
External diameter	mm	114,3	114,3	139,7	139,7	139,7	139,7	139,7	139,7	139,7
Additional water volume	l	101	120	186	198	198	205	205	224	224
Weight(1)										
Additional weight (without water)	kg	380	432	527	577	577	636	636	686	686
Additional weight (during operation)	kg	485	557	721	784	784	850	850	920	920
Operation										
Max. operating pressure, water side (without pump)	kPa	600	600	600	600	600	600	600	600	600
Max. operating pressure, water side (with pump)	kPa	400	400	400	400	400	400	400	400	400

(1) Values are guidelines only. Refer to the unit name plate.

30RBP		170R	190R	210R	230R	270R	310R	340R	380R	410R	450R
Total glycol-free free cooling - Option 305C											
Free cooling coil		All-aluminium micro-channel coils (MCHE)									
Quantity		3	4	4	4	4	5	5	6	6	7
Volume of brine in the intermediate loop	l	87	101	101	101	101	137	137	151	151	229
Hydraulic connection											
Connection	in	3"	3"	3"	3"	3"	3"	3"	3"	3"	4"
External diameter	mm	88,9	88,9	88,9	88,9	88,9	88,9	88,9	88,9	88,9	114,3
Additional water volume	l	51	51	51	51	51	82	82	80	80	135
Dimensions											
Additional length	mm	1194	1194	1194	1194	1194	1194	1194	1194	1194	1194
Weight(1)											
Additional weight (without water)	kg	750	804	804	804	804	945	945	995	993	1223
Additional weight (during operation)	kg	905	972	972	972	977	1192	1201	1260	1268	1655
Operation											
Max. operating pressure, water side (without pump)	kPa	1000	1000	1000	1000	1000	1000	1000	1000	1000	1000
Max. operating pressure, water side (with pump)	kPa	400	400	400	400	400	400	400	400	400	400

30RBP		480R	550R	610R	670R	720R	770R	800R	870R	950R
Total glycol-free free cooling - Option 305C										
Free cooling coil		All-aluminium micro-channel coils (MCHE)								
Quantity		7	8	9	10	10	11	11	12	12
Volume of brine in the intermediate loop	l	229	244	293	302	302	348	348	362	362
Hydraulic connection										
Connection	in	4"	4"	5"	5"	5"	5"	5"	5"	5"
External diameter	mm	114,3	114,3	139,7	139,7	139,7	139,7	139,7	139,7	139,7
Additional water volume	l	135	133	172	172	172	199	199	199	199
Dimensions										
Additional length	mm	1194	1194	1194	1194	1194	1194	1194	1194	1194
Weight(1)										
Additional weight (without water)	kg	1224	1277	1430	1480	1480	1599	1599	1650	1650
Additional weight (during operation)	kg	1660	1731	1977	2037	2037	2230	2230	2295	2295
Operation										
Max. operating pressure, water side (without pump)	kPa	1000	1000	1000	1000	1000	1000	1000	1000	1000
Max. operating pressure, water side (with pump)	kPa	400	400	400	400	400	400	400	400	400

(1) Values are guidelines only. Refer to the unit name plate.

DIMENSIONS, CLEARANCES 305A and 305B

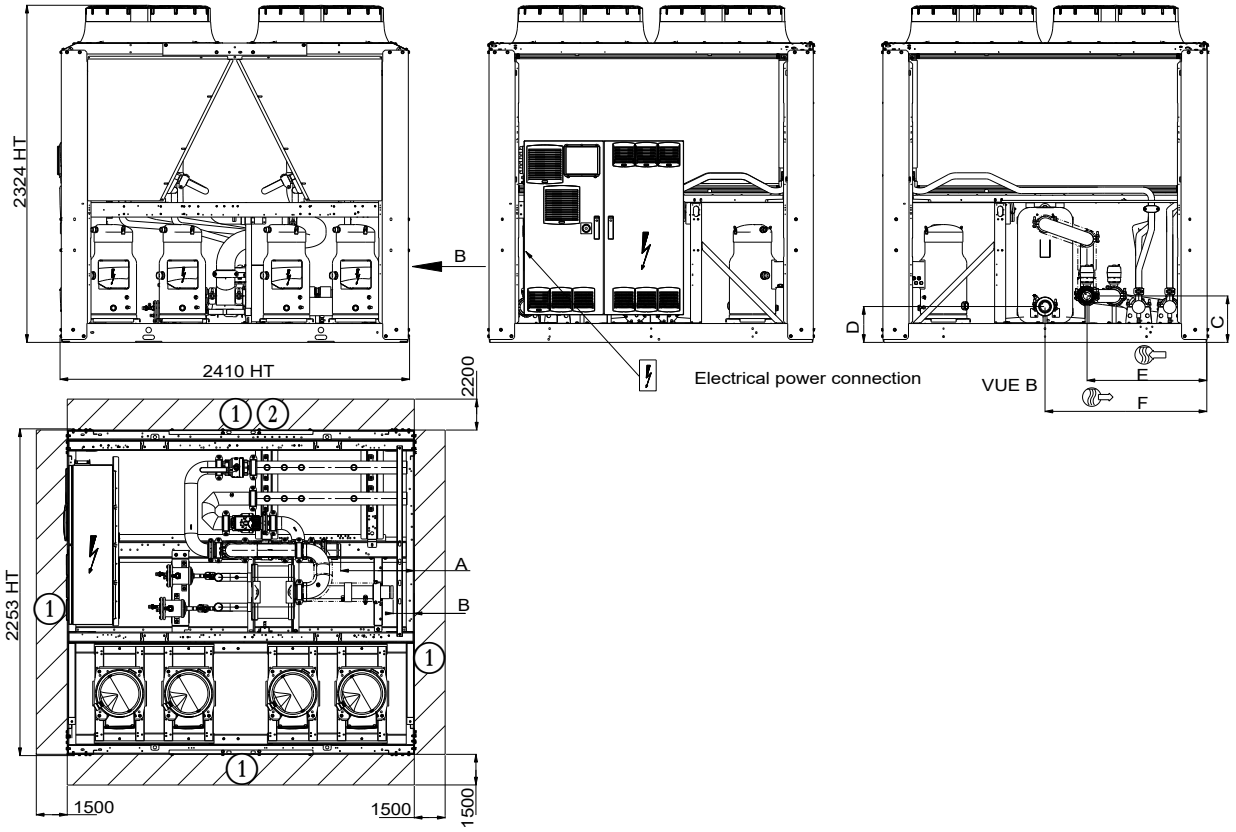

30RB/30RBP	170R-190R-210R-230R	270R	310R	340R	380R	410R	450R	480R	550R	610R-720R	770R-950R
Length	2410		3604				4798			5992	7186
Length A	507		761				813			1172	1760
Length B	196	147	858	756	788	677	856	815	745	1520	2646
Length C	320		320				320			320	320
Length D	247		247				247			251	251
Length E	825		825				826			826	826
Length F	1116		1116				1116			1030	1030
Victaulic	3”		4”				4”			5”	5”

Key:
All dimensions are given in mm.

1 Clearances required for maintenance and air flow
2 Clearance recommended for coil removal
Water inlet
Water outlet
Air outlet, do not obstruct
Control box

NOTE: Non-contractual drawings.

When designing a system, refer to the certified dimensional drawings provided with the unit or available on request.

Refer to the nameplate for the machine weight.

Refer to the certified dimensional drawings for the location of fixing points, weight distribution and coordinates of the centre of gravity, hydraulic and electrical connections.

DIMENSIONS AND FREE SPACE, GLYCOL-FREE 305C

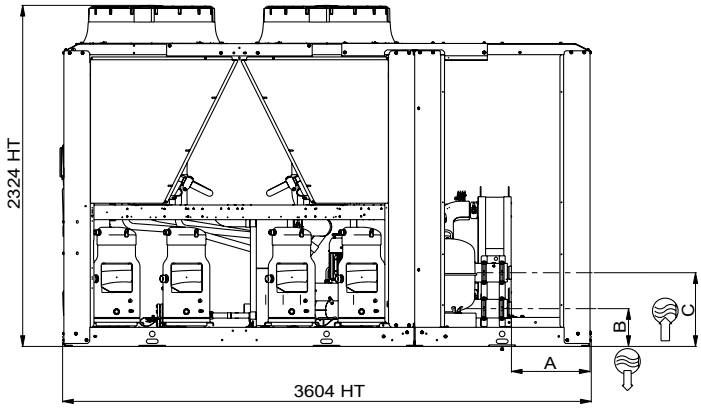

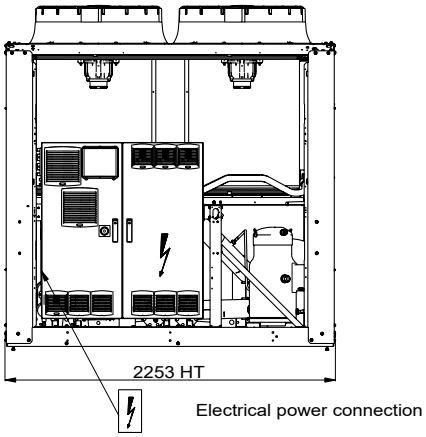

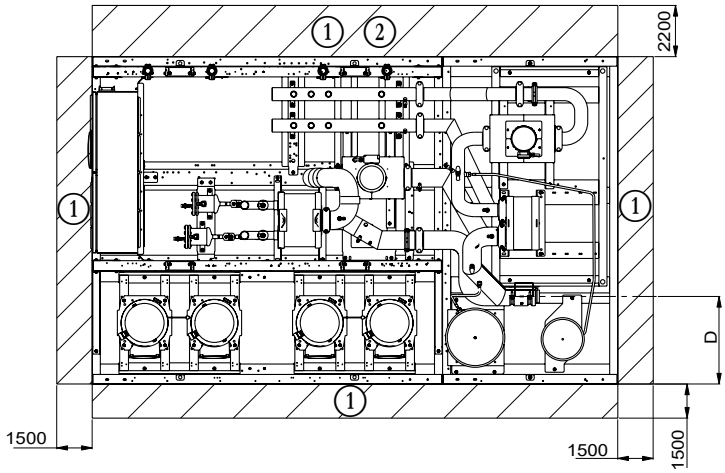

30RBP	170R-190R-210R-230R-270R	310R-340R-380R-410R	450R-480R-550R	610R-720R	770R-950R
Length	3604	4798	5991	7186	8379
Length A	534	534	534	357	357
Length B	258	258	258	258	258
Length C	503	503	503	503	503
Length D	597	597	597	597	597
Victaulic	3”	3”	4”	5”	5”

Key:
All dimensions are given in mm.

1. Clearances required for maintenance and air flow
2. Clearance recommended for coil removal

Water inlet

Water outlet

Air outlet, do not obstruct

Control box

NOTE: Non-contractual drawings.

When designing a system, refer to the certified dimensional drawings provided with the unit or available on request.

Refer to the nameplate for the machine weight.

Refer to the certified dimensional drawings for the location of fixing points, weight distribution and coordinates of the centre of gravity, hydraulic and electrical connections.

12.2.8.2 - Free cooling operation

The unit's SmartVu™ control maximises the use of the Free Cooling based on the needs of the application and the climate conditions. Once the chilled water/ambient air temperature differential exceeds the threshold value by 1K, the SmartVu™ control activates Free Cooling and adjusts the air flow rate to optimise the unit's energy performance. If the operating conditions permit the Free Cooling to operate on its own to meet the requirements, the compressors are stopped. Two motorised valves direct the chilled water to the Free Cooling coils.

Operating modes:

There are three operating modes

Summer (warm weather season): Mechanical cooling mode

The liquid chiller meets the needs traditionally using the refrigerant circuit. The fluid bypasses the Free Cooling coils and is cooled by the evaporator.

Mid-season: Combination mode

It is possible to operate in combination Free Cooling and mechanical cooling mode. This helps optimise Free Cooling operations while covering the system's cooling requirements. The fluid is pre-cooled by the Free Cooling coils positioned in series with the refrigerant circuit evaporator which finalises cooling of the fluid.

Winter (cold weather season): Free Cooling mode

Depending on the capacity requested and the setpoint, all of the requirements may be fulfilled by the Free Cooling in this operating mode without the fans running, thereby ensuring optimum energy efficiency.

12.2.8.3 - General information

Corrosion protection:

With the hydraulic Free Cooling options (305A/B or in the intermediate loop of the 305C), **it is compulsory to use a glycol-based solution** (EG or PG) containing corrosion inhibitors, in order to protect the aluminium exchangers.

It is strongly recommended that the loop is analysed each year to ensure that these inhibitors are present.

The table below gives the maximum period after which it is necessary to top up the inhibitors.

Open loop operation is prohibited.

Maximum number of years between two top-ups of corrosion inhibitor for the 305A and 305B free cooling options:

		Total number of Free Cooling coils connected to the water loop											
		2	4	6	8	10	12	14	16	18	20	22	24
		Glycol 20%**											
Total volume in the loop* (litres)	500	3	2	***	***	***	***	***	***	***	***	***	***
	1000	6	3	2	2	***	***	***	***	***	***	***	***
	2500	>15	8	5	4	3	3	***	***	***	***	***	***
	5000	>15	>15	11	8	6	5	5	4	4	3	3	3
	10000	>15	>15	>15	>15	>15	11	9	8	7	6	6	5
	15000	>15	>15	>15	>15	>15	>15	14	12	11	10	9	8
		Glycol 30%**											
	500	5	2	***	***	***	***	***	***	***	***	***	***
	1000	10	5	3	2	***	***	***	***	***	***	***	***
	2500	>15	12	8	6	5	4	***	***	***	***	***	***
	5000	>15	>15	>15	>15	10	8	7	6	5	5	4	4
	10000	>15	>15	>15	>15	>15	>15	14	12	11	10	9	8
	15000	>15	>15	>15	>15	>15	>15	>15	>15	>15	14	13	12
		Glycol 45%**											
	500	7	4	***	***	***	***	***	***	***	***	***	***
	1000	14	7	5	4	***	***	***	***	***	***	***	***
	2500	>15	>15	12	9	7	6	***	***	***	***	***	***
	5000	>15	>15	>15	>15	>15	12	10	9	8	7	6	6
	10000	>15	>15	>15	>15	>15	>15	>15	>15	>15	14	13	12
	15000	>15	>15	>15	>15	>15	>15	>15	>15	>15	>15	>15	>15

* Also check the minimum volume in the standard “application data” section.
** New EG or PG.
*** Volume too low.

	Volume of inhibitor to add after x* years, as a proportion to the total volume in the loop:
Glycol 20%	0,8%
Glycol 30%	1,2%
Glycol 45%	1,8%

* See previous table.

Example:

If the loop contains 2500L, comprising EG30%, for a unit with 6 Free Cooling coils, then it is necessary to add 30L (2500*1.2%) of corrosion inhibitor every 8 years.

The corrosion inhibitors to be used are dipotassium hydrogen phosphate type inhibitors. Only use products compatible with aluminium. It is not recommended that the glycol is diluted to obtain the desired concentration, so as to not reduce the original quantity of corrosion inhibitors.

Formula equivalent to table 1 ► X = (V*P) / (1578*N)

- X = Number of years between two corrosion inhibitor top-ups
- V = Total volume in the loop (litres)
- P = Glycol concentration (%)
- N = Total number of Free Cooling coils connected to the water loop

Formula equivalent to table 2 ► X = (V*P) / (2500*N)

- I = Volume of inhibitor to be added after X years (litres)
- V = Total volume in the loop (litres)
- P = Glycol concentration (%)

Maximum number of years between two top-ups of corrosion inhibitor for the 305C free cooling options:

With the glycol-free option (305C), the corrosion inhibitor must be topped up every 5 years, in the intermediate loop.

The top-up volume of corrosion inhibitor is determined in the same way as the free cooling option (see the formula in table 2) with the volumes of the intermediate loop.

Protection against fouling:

The brine loop must be clean. To ensure the exchangers are able to operate correctly, it is recommended that a sludge container, settling container, or another filtration system is also installed upstream of the unit, if necessary.

Frost protection

To prevent the risks of freezing when operating in low temperature environments, the units equipped with the Free Cooling option must be protected with a glycol-based solution, see Freezing curve for Ethylene and Propylene glycol (section 12.2.6). The unit is delivered without glycol.

Free cooling 305A or 305B

When filling with glycol, ensure that the two motorised valves are open, along with the manual valve, to guarantee that the glycol is correctly distributed within the unit.

If the customer loop requires testing or flushing, ensure that the Free Cooling circuit valve is closed to prevent water from returning to the Free Cooling micro-channel coils.

If water is introduced, drain the unit using the drain screws placed on each coil and the drain valves at the low point in the Free Cooling manifolds. Then add a glycol-based solution to protect the unit from freezing.

NOTE: If the manufacturer's recommendations are not respected, there is a risk of damage to the equipment.

The use of fresh water is prohibited with the option 305 A and 305 B.

Glycol Free : 305C

The unit is delivered without glycol in the intermediate loop. During installation, it must be filled with the required concentration. In the technical specifications, you will find the volumes of glycol to be used.

The intermediate loop must be filled with glycol via the drain taps. Ensure you use clean glycol, when filling the tank. Ideally, use a filter with a mesh size of 700 µm for filling. The use of fresh water to fill the intermediate loop is prohibited.

Ensure that the air is purged correctly from the high point (level with the free cooling coils and the glycol-free exchanger)

Free cooling pipes

The maximum operating pressure for the total and partial Free Cooling option is 6 bar. The nominal value is indicated on the unit's name plate.

The manual valve installed on the unit's Free Cooling loop must always be in the open position, except during draining or maintenance.

12.2.8.4 - Installation and hydraulic connection

Circulation diagram, option 305A and 305B

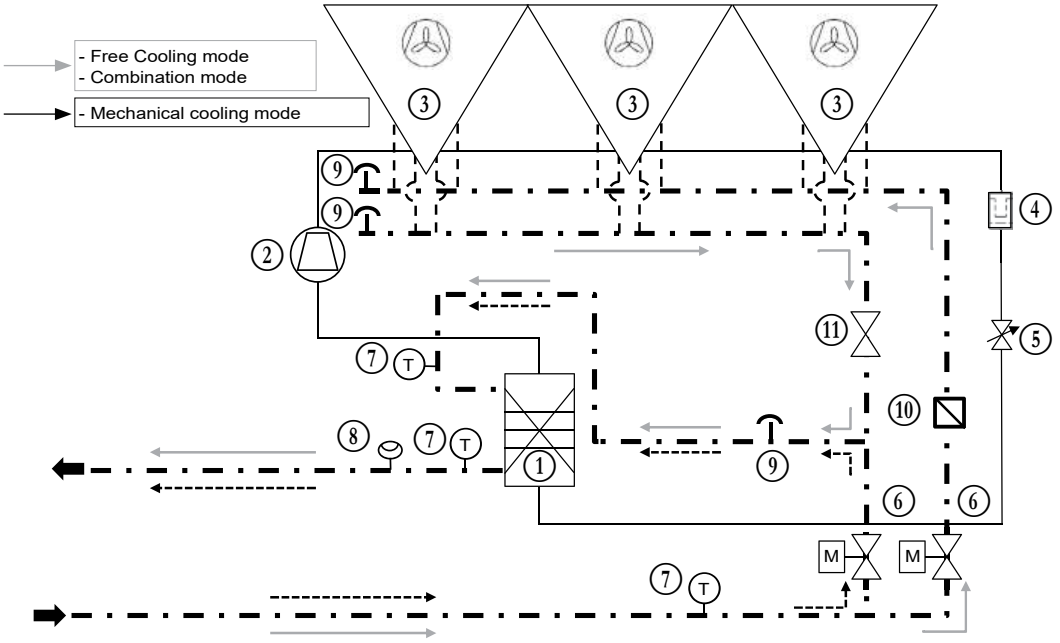

Refrigerant circuit: ——
1. Evaporator
2. Compressors
3. MCHE condenser & MCHE Free Cooling coil
4. Dehumidifier filter
5. Electronic expansion valve

Water circuit: - · - · -
6. Motorised valve
7. Temperature sensor
8. Flow rate controller
9. Vent valve
10. Filter
11. Manual valve

Circulation diagram, option 305C

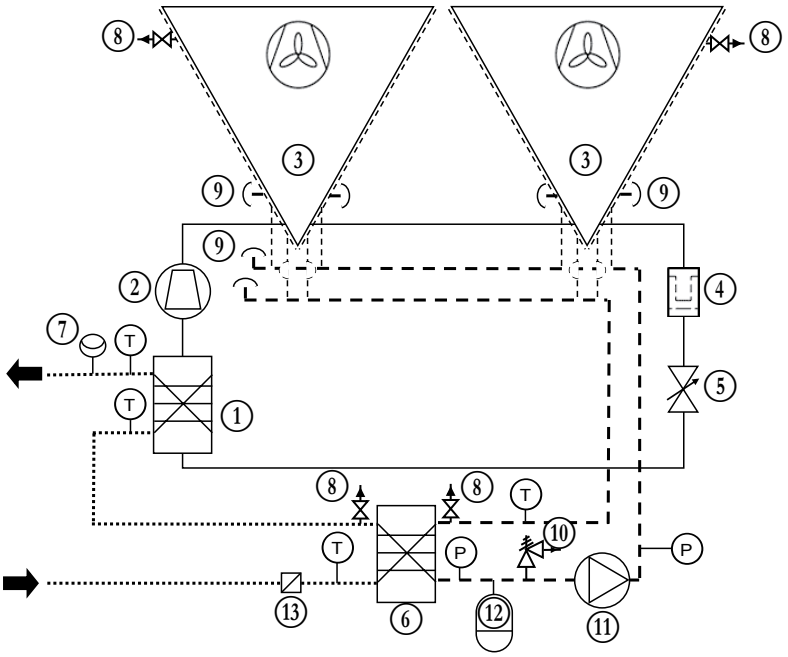

1. Evaporator
2. Compressors
3. MCHE condenser & MCHE Free Cooling coil
4. Dehumidifier filter
5. Electronic expansion valve
6. BPHE Glycol Free
7. Flow rate controller
8. Air bleed
9. Brine drain valve
10. Safety valve
11. Pumpe Glycol Free
12. Expansion tank
13. Filter

T Temperature sensor
P Pressure sensor

Water circuit .....
Internal brine circuit – – –
Refrigerant circuit ——

Free cooling hydraulic module 305A and 305B

A filter with a mesh size of 0.7 mm is factory fitted inside the Free Cooling circuit pipe to protect the micro-channel coils from any contamination. During system start-up, after a few hours of operation, it is recommended that the cleanliness of the filter is checked to ensure no debris was been caught in the mesh.

The filters do not have any particular operating requirements. However, the mesh must be cleaned or changed as necessary. To check the level of fouling, two branch connections (2) are provided upstream and downstream of the filter for the installation of a differential pressure sensor (not provided).

Replacement procedure for the filter for options 305A and 305B

1. Close the Free Cooling circuit valve and close the manual valve
2. Unscrew the clamp (4) and remove the clamp (3)
3. Swivel the piping so that the filter (1) can be accessed
4. Clean the filter using water or replace it if necessary (the filter cleaning frequency depends on the fouling level in the network)
5. Refit the clamps and tighten. For the tightening torques for the screws, nuts and bolts, refer to table 13.5 – Tightening torques for the main fastenings
6. Check that the clamps are correctly sealed
7. Re-open the manual valve.
8. If necessary, top up the glycol with a concentration suitable for the installation.

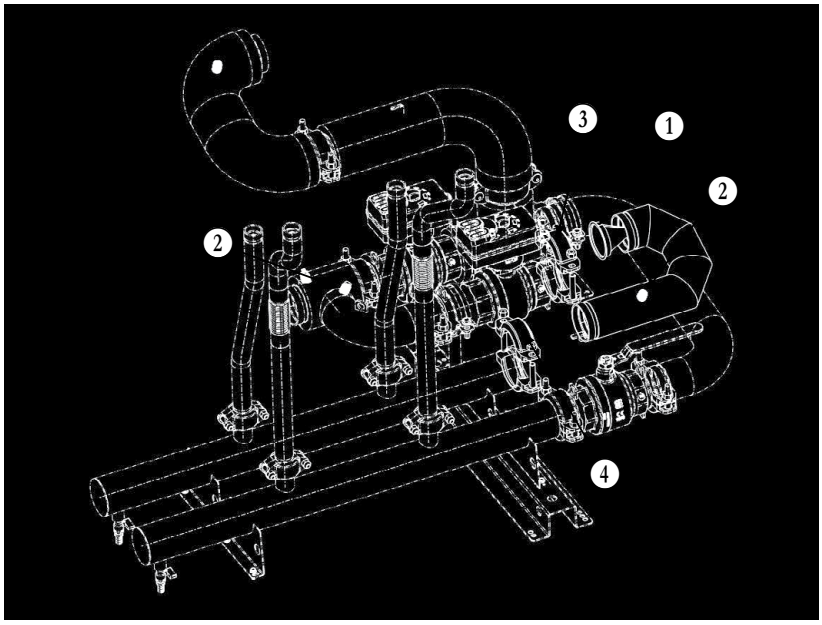

Expansion vessel for options 305A and 305B

If the Free Cooling option is combined with the expansion tank, the tank is supplied in the machine in a non-final position. To be installed by the installer. The tank should be positioned vertically and fixed outside the machine. A 2 m long hydraulic hose is supplied for the connection.

12.2.8.5 - Application data

Unit pressure drop curves

Total Free Cooling option (305A) – Operation in mechanical cooling mode

Sizes 170R - 550R

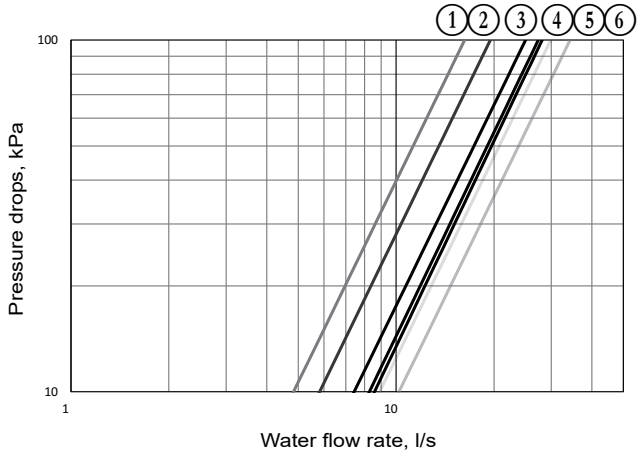

Sizes 610R - 950R

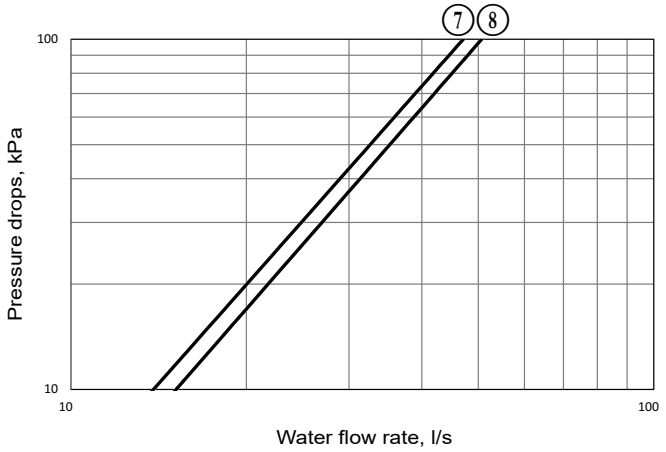

1. 30RBP 170R - 230R
2. 30RBP 270R
3. 30RBP 310R
4. 30RBP 340R - 380R
5. 30RBP 410R
6. 30RBP 450R - 550R
7. 30RBP 610R - 720R
8. 30RBP 770R - 950R

Total Free Cooling option (305A) – Operation in Free Cooling mode

Sizes 170R - 550R

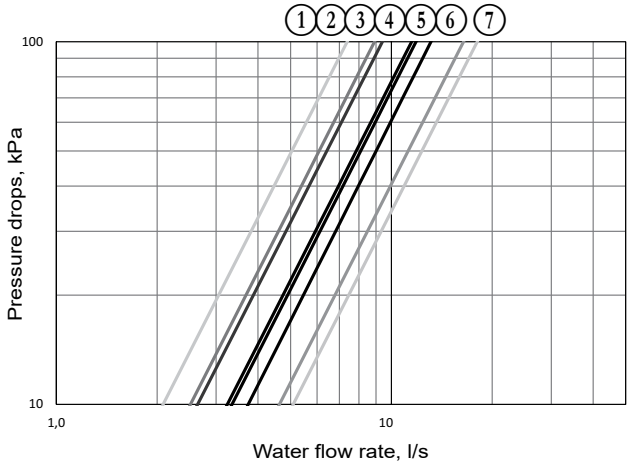

Sizes 610R - 950R

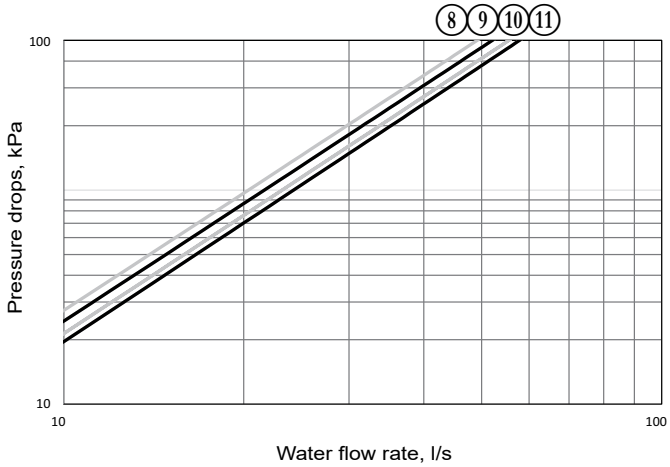

1. 30RBP 170R
2. 30RBP 190R - 230R
3. 30RBP 270R
4. 30RBP 310R - 340R
5. 30RBP 380R - 410R
6. 30RBP 450R - 480R
7. 30RBP 550R
8. 30RBP 610R
9. 30RBP 670R - 720R
10. 30RBP 770R - 800R
11. 30RBP 870R - 950R

Partial Free Cooling option (305B) – Operation in mechanical cooling mode

Sizes 170R - 550R

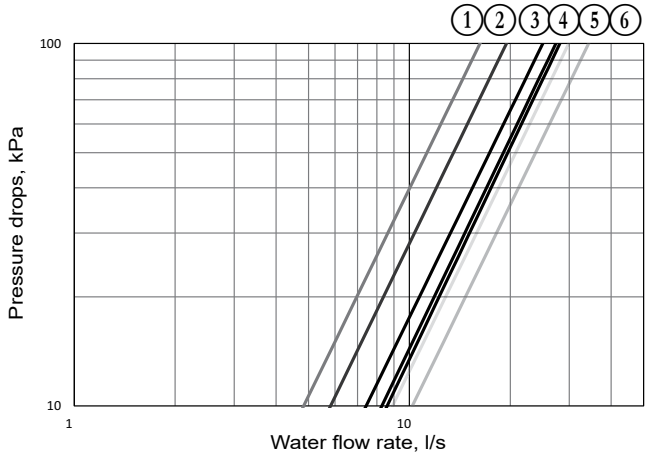

1 30RBP 170R - 230R
2 30RBP 270R
3 30RBP 310R
4 30RBP 340R - 380R
5 30RBP 410R
6 30RBP 450R - 550R

Sizes 610R - 950R

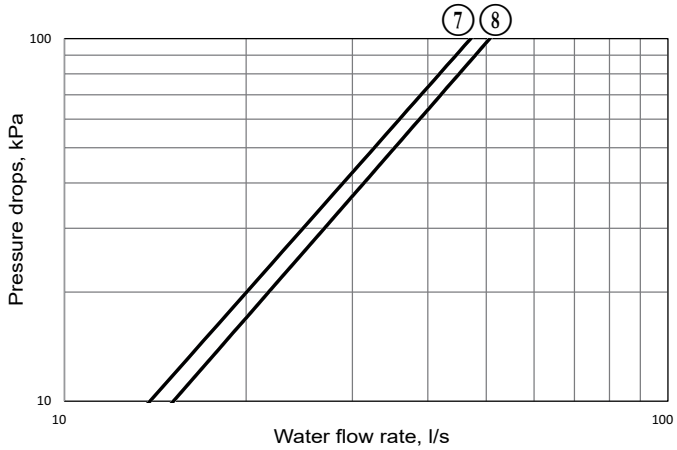

7 30RBP 610R - 720R
8 30RBP 770R - 950R

Partial Free Cooling option (305B) – Operation in Free Cooling mode

Sizes 170R - 550R

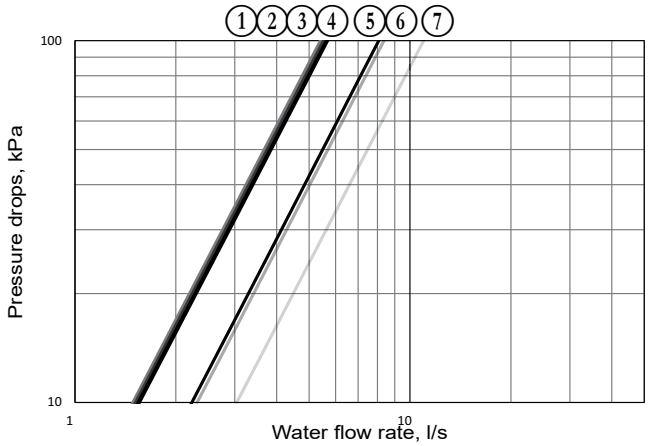

1 30RBP 170R
2 30RBP 190R - 230R
3 30RBP 270R
4 30RBP 310R - 340R
5 30RBP 380R - 410R
6 30RBP 450R - 480R
7 30RBP 550R

Sizes 610R - 950R

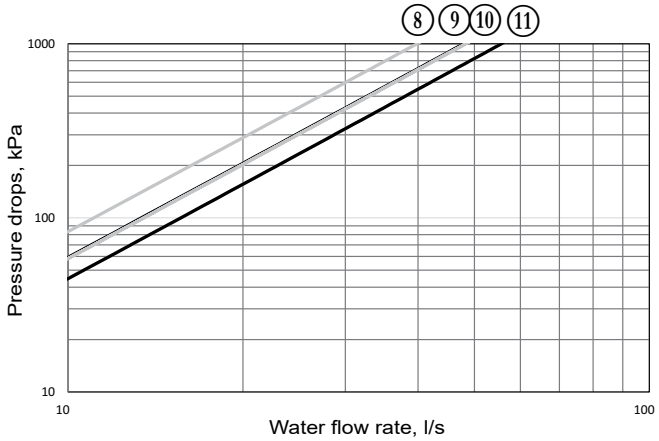

8 30RBP 610R
9 30RBP 670R - 720R
10 30RBP 770R - 800R
11 30RBP 870R - 950R

Total glycol-free option (305C) - Operation in mechanical cooling and free cooling mode

Sizes RBP 170R - 410R

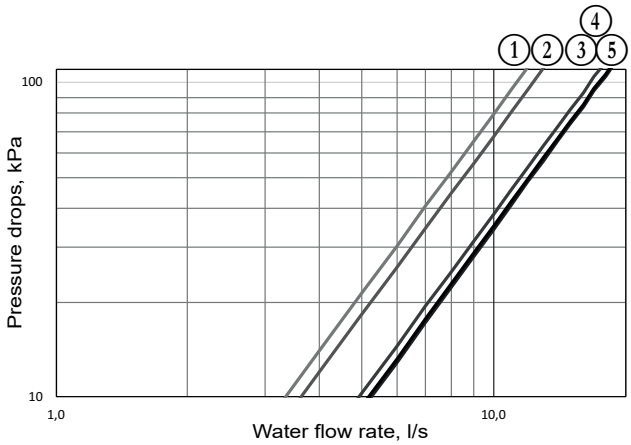

1 30RBP 170R-230R
2 30RBP 270R
3 30RBP 310R
4 30RBP 340R - 380R
5 30RBP 410R

Sizes RBP 450R - 950R

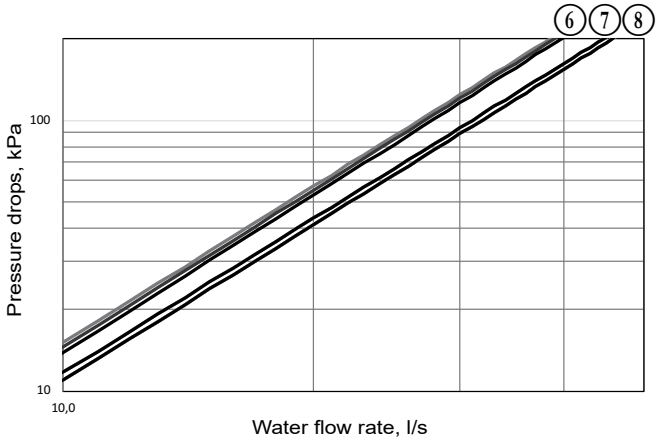

1 30RBP 450R - 550R
2 30RBP 610R - 720R
3 30RBP 770R - 950R

Available static system pressure

Case of units with option 116V (single high pressure variable-speed pump at 50 Hz)

Data applicable for:

- Pure water at 20 °C.
- When using frost, the maximum flow rate is reduced.

Total Free Cooling option (305A) – Operation in Free Cooling mode

Sizes 170R - 380R

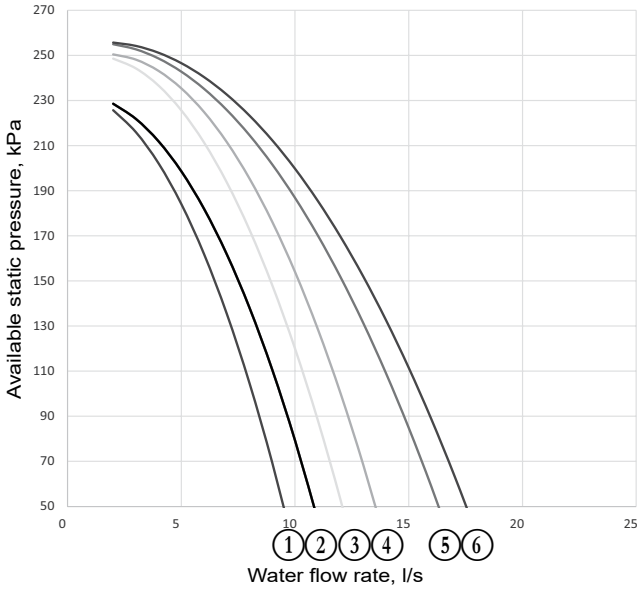

1 30RBP 170R
2 30RBP 190R - 230R
3 30RBP 270R
4 30RBP 310R
5 30RBP 340R
6 30RBP 380R

Sizes 410R - 550R

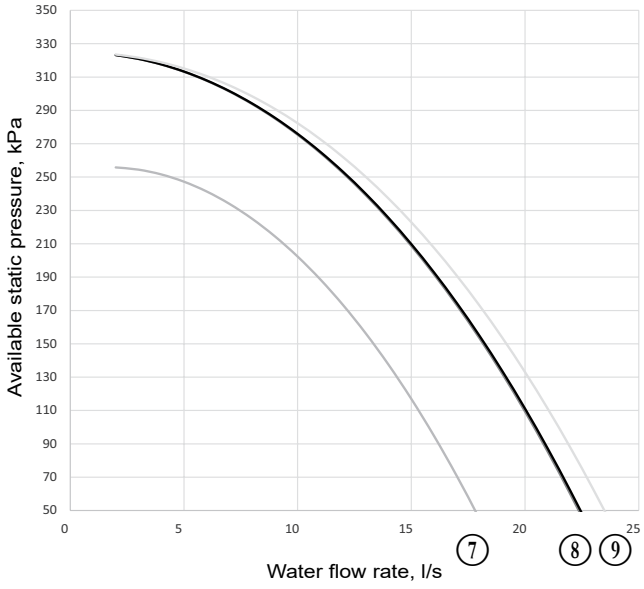

7 30RBP 410R
8 30RBP 450R - 480R
9 30RBP 550R

Sizes 610R - 950R

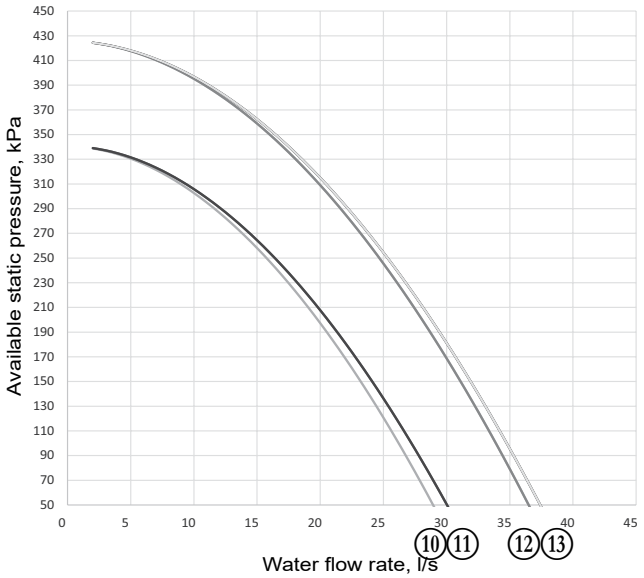

10 30RBP 610R
11 30RBP 670R - 720R
12 30RBP 770R - 800R
13 30RBP 870R - 950R

Partial Free Cooling option (305B) – Operation in Free Cooling mode

Sizes 170R - 380R

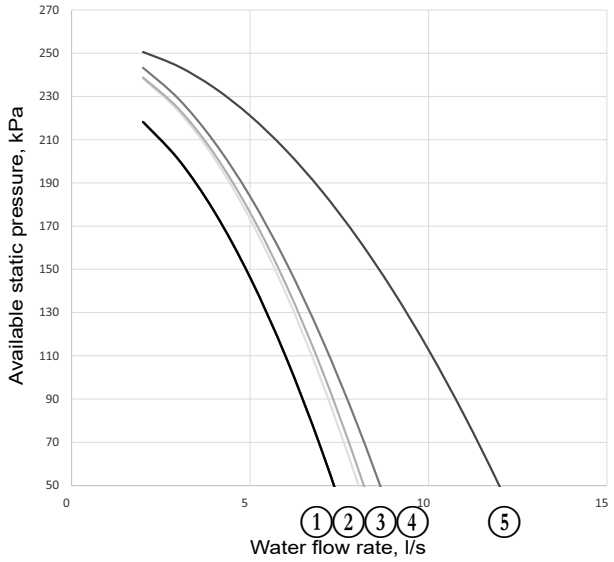

1 30RBP 170R - 230R
2 30RBP 270R
3 30RBP 310R
4 30RBP 340R
5 30RBP 380R

Sizes 410R - 550R

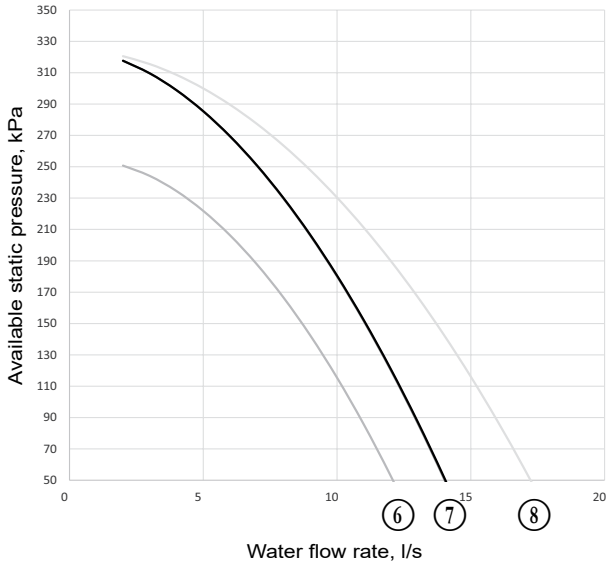

6 30RBP 410R
7 30RBP 450R - 480R
8 30RBP 550R

Sizes 610R - 950R

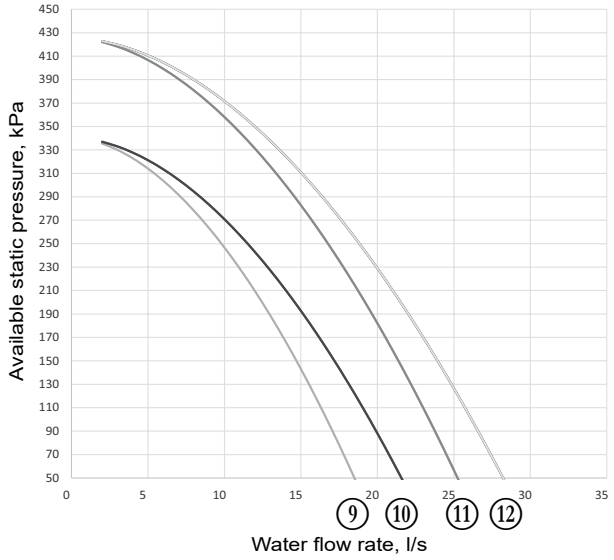

10 30RBP 610R
11 30RBP 670R - 720R
12 30RBP 770R - 800R
13 30RBP 870R - 950R

Total glycol-free option (305C) - Operation in mechanical cooling and free cooling mode

Sizes RBP 170R - 550R

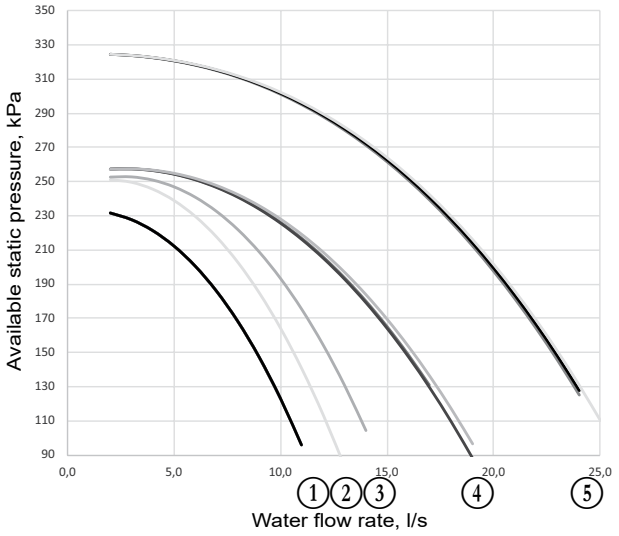

Sizes RBP 610R - 950R

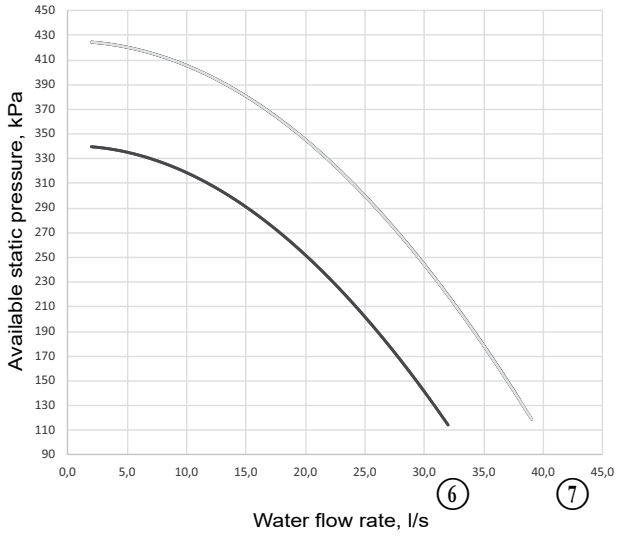

1. 30RBP 170R - 230R
2. 30RBP 270R
3. 30RBP 310R
4. 30RBP 340R - 410R
5. 30RBP 450R - 550R
6. 30RBP 610R - 720R
7. 30RBP 770R - 950R

12.2.8.6 - Operating limits

30RBP 170R-950R units

Water-cooled heat exchanger		**Minimum**	**Maximum**
Water inlet temperature at start-up	°C	8	40
Water outlet temperature during operation	°C	5	20
Air-cooled exchanger		**Minimum**	**Maximum**
Outdoor ambient operating temperature			
30RBP units - Full load	°C	-20	47
30RBP units - Part load	°C	-20	52(1)

(1) Part load operation permitted above an outdoor air temperature of 47 °C. Contact the manufacturer to select a unit using the electronic catalogue.

To ensure optimal efficiency and reliability of the equipment and all its functions, we recommend taking out a maintenance contract with the local organisation set up by your manufacturer. This contract will include regular inspections by the manufacturer's Service specialists so that any malfunction is detected and corrected quickly, ensuring that no serious damage can occur. The manufacturer's service maintenance contract is the best way to ensure the maximum operating life for your equipment and, through the expertise of manufacturer's qualified personnel, provides the ideal way to manage your system energy consumption effectively.

The refrigeration equipment must be serviced by professionals; however, routine checks may be carried out locally by specially-trained technicians. See standard EN 378-4.

All refrigerant charging, removal and draining operations must be carried out by a qualified technician and with the correct equipment for the unit. Any inappropriate handling can lead to uncontrolled fluid or pressure leaks.

IMPORTANT:

Before performing any work on the unit ensure it is de-energized. If a refrigerant circuit is opened, it must be evacuated, recharged and tested for leaks. Before any operation on a refrigerating circuit, it is necessary to evacuate the refrigerant charge from the device using a load transfer unit.

Simple preventive maintenance will allow you to get the best performance from your HVAC unit:

- Optimisation of energy performance,
- Reduced electricity consumption,
- Prevention of accidental component failure,
- Prevention of major time-consuming and costly work,
- Protection of the environment.

There are five maintenance levels for refrigeration units, as defined by the AFNOR X60-010 standard.

NOTE: Any deviation from or failure to comply with these maintenance criteria will render the guarantee conditions for the refrigeration unit null and void, and will release the manufacturer from its liability.

13.1 - Level 1 maintenance

These simple procedures can be carried out by the user:

- Visual inspection for oil traces (sign of a refrigerant leak),
- Check for leaks in the circuit (monthly),
- Clean the air-cooled exchanger once a year,
- Check that the protective grilles are present and in good condition, and that the doors and covers are properly closed,
- Check the alarm report if the unit does not operate (see the control manual),
- Verify the refrigerant charge in the liquid line sight glass,
- Verify the temperature difference at the heat exchanger inlet and outlet is correct,
- Check for any general signs of deterioration,
- Check the anti-corrosion coatings.

13.2 - Level 2 maintenance

This level requires specific expertise in electrical, hydraulic and mechanical systems. It is possible that this expertise may be available locally; there may be a maintenance service, industrial site or specialist subcontractor in the area.

This maintenance can be carried out monthly or annually, depending on the type of check.

In these conditions, the following maintenance work is recommended:

Carry out all level 1 operations, then:

Electrical checks (annual checks):

- At least once a year, tighten the electrical connections for the power circuits (see tightening torques table),
- Check and tighten all control connections, if required,
- Check the labelling of the system and instruments, re-apply the missing labels if required,
- Remove the dust and clean the interior of the electrical boxes. Be careful not to blow dust or debris into components; use a brush and vacuum wherever possible,
- Clean the insulators and bus bar supports (dust combined with moisture reduces the insulation gaps and increases current leakage between phases and from phase to ground),
- Check the presence, condition and operation of electrical protective devices,
- Check the presence, condition and operation of control components,
- Check that all heaters are operating correctly,
- Replace the fuses every 3 years or every 15000 hours (ageing),
- Check that no water has penetrated into the electrical box,
- On the main electrical box and for units equipped with offset electrical boxes, regularly check the cleanliness of the filter media to maintain the correct air flow.
- Check that the capacitor is operating correctly (Power factor correction option).

Mechanical checks:

- Check that the mounting bolts for the ventilation sub-assemblies, fans, compressors and electrics box are securely tightened

Hydraulic checks:

- When working on the hydraulic circuit, take care not to damage the adjacent air-cooled exchanger,
- Check the hydraulic connections,
- Check the condition of the expansion tank (presence of corrosion or loss of gas pressure) and replace it if required, paying attention to the maximum pressure indicated on it.
- Drain the hydraulic circuit (see chapter “Water flow control procedure”),
- Clean the water filter (see chapter “Water flow control procedure”),
- Replace the gland packing of the pump after 20000 hours of operation and the bearings after 17500 hours,
- Check the operation of the low water flow safety device,
- Check the condition of pipe thermal insulation,
- Check the concentration of the antifreeze protection (ethylene glycol or propylene glycol),
- Check the water flow via the heat exchanger pressure difference,
- Check the condition of the heat-transfer fluid or the water quality,
- Check for corrosion of the steel pipe work.

Refrigerant circuit checks:

- The unit is subject to F-gas tight regulatory checks. Please refer to the table in the introduction.
- Check the unit operating parameters and compare them with the previous values,
- Check the operation of the high pressure switches. Replace them if there is a fault,
- Check the fouling of the dehumidifier filter. Replace it if necessary,
- Keep and maintain a maintenance sheet, attached to each HVAC unit.

IMPORTANT: Ensure all adequate safety measures are taken for all these operations: use appropriate PPE (personal protective equipment), comply with all applicable industry and local regulations, and use common sense.

13.3 - Level 3 maintenance

Maintenance at this level requires specific skills, qualifications, tools and expertise. Only the manufacturer, his representative or authorised agent are permitted to carry out this work.

This maintenance work relates to the following:

- Replacement of major components (compressor, water type heat exchanger),
- Operations on the refrigerant circuit (handling refrigerant),
- Modification of factory-set parameters (change of application),
- Movement or disassembly of the refrigeration unit,
- Any operation due to proven lack of maintenance,
- Any operation covered by the warranty,
- One or two leak detection operations per year performed by qualified personnel using a certified leak detector.
- To reduce waste, the refrigerant and the oil must be transferred in accordance with applicable regulations, using methods that limit refrigerant leaks and pressure drops and with materials that are suitable for the products.
- Any leaks detected must be repaired immediately
- The compressor oil that is recovered during maintenance contains refrigerant and must be treated accordingly.
- Pressurised refrigerant must not be vented to the open air.
- If the refrigerant circuit must be opened, cap all openings for a period of up to one day. If open for longer, blanket the circuit with a dry, inert gas (e.g. nitrogen).

13.4 - Tightening the electrical connections

Component	Description	Value (N.m)
PE welded screw, customer connection		30
Power supply fuse holder cage screw terminal	FU - FUA - FUB	0,5 … 0,8
Power supply circuit breaker cage screw terminal	QF, QF1	2
Circuit breaker cage screw terminal option 284	QFA	2
Socket cage screw terminal option 284	PC	1,2
Compressor fuse holder cage screw terminal	FU1 --> FU8	3,5
Compressor contactor cage screw terminal Size 170R to 550 - Check	KM1-->KM8	1,7
Compressor contactor cage screw terminal Size 170R to 550 - Power	KM1-->KM8	5
Compressor fuse cage screw terminal Size 610 to 950	QM1-->QM8	5
Compressor contactor cage screw terminal Size 610R to 950R - Check	KM1-->KM8	1,2
Compressor contactor cage screw terminal Size 610R to 950R - Power	KM1-->KM8	9
Screw terminal, fan circuit breakers	QM11-->QM62	High 1,7 / Low 1,3
Variable drive cage screw terminal 1,5 kW, 2,2 kW, 4 kW	GS11 --> GS22	1,3
Variable drive cage screw terminal 7,5 kW, 11 kW	GS11 --> GS22	2,5
Variable drive cage screw terminal 15 kW, 18 kW	GS11 --> GS22	4,5
M6 screw, customer connection (30RB-RBP and 30RQ-RQP ≤ 170R)	QS101	8
M8 screw, customer connection (180R ≤ 30RB-RBP and 30RQ-RQP ≤ 270R)	QS101	15
M10 screw, customer connection (310R ≤ 30RQ-RQP ≤ 520R)	QS101	50
M10 screw, customer connection (310R ≤ 30RB-RBP ≤ 720R)	QS101	50
M12 screw, customer connection (from 30RB-RBP770R to 30RB-RBP950R)	QS101	75

13.5 - Tightening torques for the main fastenings

Screw type	Use	Value (N.m)
Metal screw D=4,8	Condensing module, casing, supports	4,2
Metal screw D = 6,3	Plastic impeller	4,2
Taptite M10 screw	Condensing module, casing-structure, electrical box fixing, plate heat exchanger and pump	30
Taptite M6 screw	Mounting pipes, enclosure	7
Oil equalisation screw	Oil equalisation line	145
M6 hex screw	Pipe clip	10
M10 H nut	Compressor chassis, Compressor fixing	30
M8 H nut	MCHE coil refrigerant connection unit	14

13.6 - Air-cooled exchanger

We recommend that coils are inspected regularly to check the degree of fouling. This depends on the environment where the unit is installed, in particular urban and industrial sites, and for units installed near trees that shed their leaves.

Recommendations for maintenance and cleaning of air-cooled exchangers:

- Regularly cleaning the coil surface is essential for correct unit operation.
- Eliminating contamination and removal of harmful residue will increase the operating life of the coils and the unit.
- The maintenance and cleaning procedures below are part of the regular maintenance to increase the operating life of coils.
- Specific recommendation in case of snow: for long term storage, regularly check that no snow has accumulated on the coil.

Specific data for RB and RBP fitted with MCHE:

- Clean the surface of the coil by spraying the coil regularly and uniformly from bottom to top, orienting the water jet at right angles to the surface. Do not exceed a water pressure of 6200 kPa (62 bar) or an angle of 45° in relation to the coil. The nozzle must be at least 300 mm away from the coil surface.
- Clean and scrub the entire connection with a flexible Nylon, PolyPro® or Tynex® brush and low pressure tap water.

Level 1 cleaning:

- Remove all foreign objects or debris attached to the surface of the coil or wedged between the casing and the supports
- For RQ and RQP fitted with RTPF coils, scrub vertically and gently using a brush.
- Use a low pressure dry air jet to remove all traces of dust from the coil.

Level 2 cleaning:

- Carry out the level 1 cleaning operations.
- Clean the coil using appropriate products.

Use appropriate PPE including safety glasses and/or mask, waterproof clothes and safety gloves. It is recommended to wear clothing that covers the whole body.

Specific products approved by the manufacturer for cleaning coils are available from the manufacturer's spare parts network. The use of any other product is strictly prohibited. After the cleaning product is applied, rinsing with water is mandatory (see manufacturer's standard RW01-25).

IMPORTANT:

When using a water jet, protect the (main and secondary) electrics boxes with a plastic cover to prevent water ingress.

Never use a pressure water spray without a large diffuser.

Concentrated and/or rotating water jets are strictly forbidden.

Never use a fluid with a temperature above 45°C to clean the air-cooled exchangers.

Correct and frequent cleaning (approximately every three months) will prevent two thirds of corrosion problems.

13.7 - Water type heat exchanger

Check that:

- The insulation has not been detached or torn during operations,
- The heaters and probes are operating and correctly positioned in their supports,
- The water-side connections are clean and show no sign of leakage,
- The periodic inspections required by local regulations have been carried out

13.8 - Variable frequency drive

IMPORTANT: Before any work on the variable frequency drive, ensure that the circuit is isolated and there is no voltage present (reminder: The capacitors take approximately 5 minutes to discharge once the circuit breaker has been opened). Only appropriately qualified personnel are authorised to work on the variable frequency drive.

In case of any alarm or persistent problem related to the variable frequency drive, contact the manufacturer's service department.

The variable frequency drives fitted on the units do not require a dielectric test, even if being replaced: they are systematically checked before delivery. Moreover, the filtering components installed in the variable frequency drive can falsify the measurement and may even be damaged. If there is a need to test the insulation of a component (fan motors and pumps, cables, etc.), the variable frequency drive must be disconnected from the power circuit.

13.9 - Refrigerant volume

It is essential to run the unit in cooling mode to find out whether the charge is correct; this is done by checking the actual subcooling.

Following a slight leak, it will be possible to detect a drop in the refrigerant charge from the initial charge, and this will affect the subcooling value obtained at the air-cooled exchanger outlet; it cannot, however, be detected in heating mode.

IMPORTANT:

It is therefore not possible to optimise the charge in heating mode following a leak. The unit must be run in cooling mode if the charge needs topping up.

13.10 - Refrigerant properties

R32 properties

Saturated temperatures (°C) based on the relative pressure (in kPa)							
Saturated temp.	**Relative pressure**	**Saturated temp.**	**Relative pressure**	**Saturated temp.**	**Relative pressure**	**Saturated temp.**	**Relative pressure**
-20	306	4	822	28	1730	52	3189
-19	321	5	851	29	1778	53	3264
-18	337	6	881	30	1828	54	3341
-17	354	7	912	31	1878	55	3420
-16	371	8	943	32	1929	56	3500
-15	388	9	974	33	1982	57	3581
-14	406	10	1007	34	2035	58	3664
-13	424	11	1040	35	2090	59	3748
-12	443	12	1074	36	2145	60	3833
-11	463	13	1109	37	2202	61	3920
-10	483	14	1144	38	2260	62	4009
-9	503	15	1181	39	2318	63	4099
-8	524	16	1218	40	2378	64	4191
-7	546	17	1256	41	2439	65	4284
-6	568	18	1295	42	2501	66	4379
-5	591	19	1334	43	2565	67	4476
-4	614	20	1375	44	2629	68	4575
-3	638	21	1416	45	2695	69	4675
-2	662	22	1458	46	2762	70	4777
-1	687	23	1501	47	2830		
0	713	24	1545	48	2899		
1	739	26	1635	49	2969		
2	766	25	1590	50	3041		
3	794	27	1682	51	3114		

14 - FINAL SHUT-DOWN

14.1 - Shutting down

Separate the units from their energy sources, allow them to cool then drain them completely.

14.2 - Recommendations for disassembly

Read information relating to the presence of potentially dangerous substances in the product and their precautions for use (REACH, Regulation no. 1907/2006). This information is available on the Manufacturer's website.

Use the original lifting equipment.

Sort the components according to their material for recycling or disposal, in accordance with regulations in force.

Check whether any part of the unit can be recycled for another purpose.

14.3 - Fluids to be recovered for treatment

- Refrigerant (In compliance with regulation F-GAS no. 517/2014)
- Heat-transfer fluid: depending on the installation, water, brine solution, etc.
- Compressor oil

14.4 - Materials to be recovered for recycling

- Steel
- Copper
- Aluminium
- Plastics
- Polyurethane foam (insulation)

The proportions of materials for each unit are listed in the Product Environmental Profile (PEP) available at the following website: http://www.pep-ecopassport.org/fr/consulter-les-pep/

14.5 - Waste Electrical and Electronic Equipment (WEEE)

At the end of its life, this equipment must be disassembled and contaminated fluids removed by professionals and processed via approved channels for electrical and electronic equipment (WEEE).

15 - UNIT START-UP CHECKLIST FOR INSTALLERS PRIOR TO CONTACTING THE MANUFACTURER

Preliminary information

Job name:.....

Location:.....

Installing contractor: .....

Distributor: .....

Start-up performed by..... On .....

Equipment

Model ..... Serial number .....

Compressors

Circuit A

1. Model .....
   Serial number .....
2. Model .....
   Serial number .....
3. Model .....
   Serial number .....
4. Model .....
   Serial number .....

Circuit B

1. Model .....
   Serial number .....
2. Model .....
   Serial number .....
3. Model .....
   Serial number .....
4. Model .....
   Serial number .....

Air handling equipment

Manufacturer: .....

Model ..... Serial number .....

Additional air handling units and accessories.....

.....

Preliminary equipment check

Is there any shipping damage? ..... If so, where? .....

.....

Will this damage prevent unit start-up? .....

☐ The unit is installed level
☐ The power supply corresponds to the unit nameplate
☐ Electrical circuit wiring has been sized and installed properly
☐ The unit earth cable has been connected
☐ Electrical circuit protection has been sized and installed properly
☐ All terminals are tight
☐ All cables and thermistors have been inspected for crossed wires
☐ All plug assemblies are tight

Air handling systems check

☐ All air handling units are operating
☐ All chilled water valves are open
☐ All fluid piping is connected properly
☐ All air has been vented from the system
☐ Chilled water pump is operating with the correct rotation. CWP current: Assigned:..... Actual.....

15 - UNIT START-UP CHECKLIST FOR INSTALLERS PRIOR TO CONTACTING THE MANUFACTURER

Unit start-up

☐ Chilled water pump contactor has been correctly cabled with the chiller
☐ Oil level is correct
☐ The unit has been checked for leaks (including couplings)
☐ Locate, repair, and report any refrigerant leaks

.....
.....
.....

Check voltage imbalance: AB..... AC..... BC.....
Average voltage = ... (See installation instructions)
Maximum deviation = ... (See installation instructions)
Voltage imbalance = ... (See installation instructions)

☐ Voltage imbalance is less than 2%

WARNING
Do not start the chiller if the voltage imbalance is greater than 2%. Contact your local power company for assistance.

☐ All incoming power voltage is within the nominal voltage range
☐ The compressor crankcase heaters have been running for 6 hours

Evaporator water loop check

Water loop volume ..... = ... (litres)
Calculated volume ..... = ... (litres)

☐ Correct loop volume established
☐ Correct loop corrosion inhibitor included ..... litres of
☐ Correct loop frost protection included (if required) ..... litres of
☐ Water piping uses trace heating with an electric heater up to the evaporator
☐ Return water piping is equipped with a screen filter with a mesh size of 1.2 mm

Checking the pressure drop across the evaporator (without hydraulic module) or ESP(1) (with hydraulic module)

Evaporator inlet = ... (kPa)
Evaporator outlet = ... (kPa)
Pressure drop (Inlet - Outlet) = ... (kPa)

(1) ESP: External Static Pressure

WARNING
Plot the pressure drop on the evaporator flow rate/pressure drop curve to determine the flow rate in l/s at the nominal operating conditions for the system. For units with hydraulic module, an indication of the flow rate is displayed by the unit control device (see the 30RB/RBP and 30RQ/RQP control manual).
If necessary, use the control valve to adjust the flow rate to its rated value.

☐ Flow rate from the pressure drop curve, l/s = ...
☐ Nominal flow rate, l/s = ...
☐ The flow rate in l/s is higher than the minimum unit flow rate
☐ The flow rate in l/s corresponds to the specification of ..... (l/s)

15 - UNIT START-UP CHECKLIST FOR INSTALLERS PRIOR TO CONTACTING THE MANUFACTURER

Carry out the QUICK TEST function (Consult the manufacturer's Service):

Check and log on to the user menu configuration

Load sequence selection.....
Capacity ramp loading selection.....
Start-up delay .....
Pump control .....
Setpoint reset mode .....
Night mode capacity limitation.....

Re-enter the setpoints

To start the chiller

WARNING

Be sure that all service valves are open, and that the pump is on before attempting to start this machine. Once all checks have been made, try to start the unit.

The unit starts and operates properly

Temperatures and pressures

WARNING

Once the machine has been operating for a while and the temperatures and pressures have stabilised, record the following:

Evaporator water inlet.....
Evaporator water outlet .....
Ambient temperature .....
Circuit A suction pressure.....
Circuit B suction pressure.....
Circuit A discharge pressure.....
Circuit B discharge pressure .....
Circuit A suction temperature .....
Circuit B suction temperature .....
Circuit A discharge temperature .....
Circuit B discharge temperature.....
Circuit A liquid line temperature.....
Circuit B liquid line temperature.....

NOTES:

.....
.....
.....

CARRIER participates in the ECP programme for LCP-HP
Check ongoing validity of certificate:
www.eurovent-certification.com

The quality management system of this product's assembly site has been certified in accordance with the requirements of the ISO 9001 standard (latest current version) after an assessment conducted by an authorized independent third party.
The environmental management system of this product's assembly site has been certified in accordance with the requirements of the ISO 14001 standard (latest current version) after an assessment conducted by an authorized independent third party.
The occupational health and safety management system of this product's assembly site has been certified in accordance with the requirements of the ISO 45001 standard (latest current version) after an assessment conducted by an authorized independent third party.
Please contact your sales representative for more information.

Order No.: 10579, 07.2024 - Supersedes order No.: 10579, 12.2023.
The manufacturer reserves the right to make changes to the product specifications without notice.

Carrier, Montluel, France.
Printed in the European Union.