Carrier

INSTALLATION, OPERATION AND MAINTENANCE MANUAL

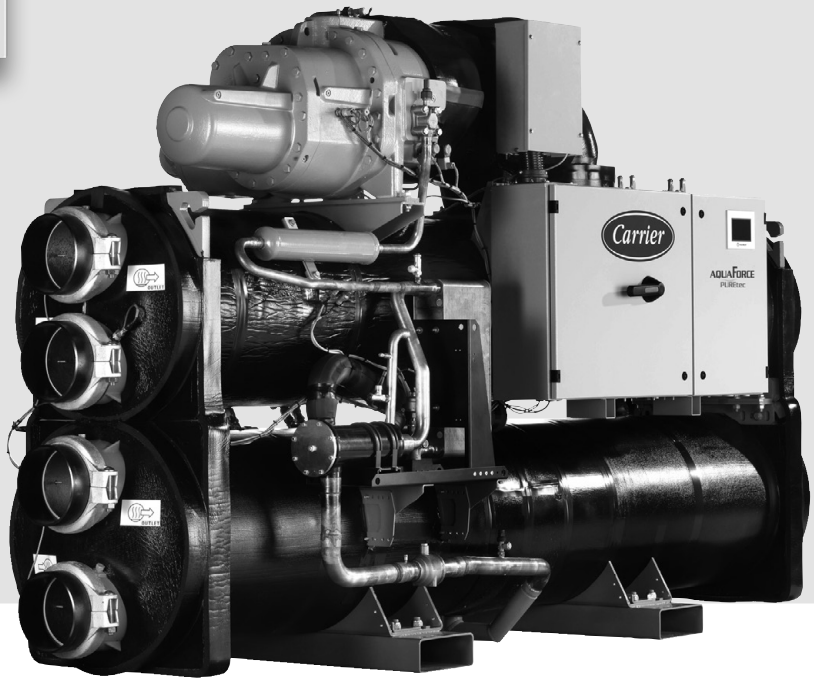

High temperature water-source heat pump AquaForce® PUREtec with R1234ze(E)

61XWHLZE 03 - 17
61XWH-ZE 03 - 17
61XWHHZE 03-10 & 15

AQUAFORCE PUREtec

Original document

CONTENTS

1 - INTRODUCTION 5
1.1 - Installation safety considerations 5
1.2 - Equipment and components under pressure 7
1.3 - Maintenance safety considerations 7
1.4 - Repair safety considerations 8

2 - PRELIMINARY CHECKS 10
2.1 - Check equipment received 10
2.2 - Moving and sitting the unit 10

3 - DIMENSIONS, CLEARANCES 11
3.1 - 61XWHLZE/61XWH-ZE/61XWHHZE 03-05-07 11
3.2 - 61XWHLZE/61XWH-ZE 10-14-15-17; 61XWHHZE 10-15 12

4 - PHYSICAL AND ELECTRICAL DATA 13
4.1 - Physical data 13
4.2 - Electrical data 14
4.3 - Short-circuit stability current for all units 15
4.4 - Compressor electrical data 15
4.5 - Compressor usage per circuit (A, B) 15

5 - ELECTRICAL CONNECTION 16
5.1 - Power supply 16
5.2 - Voltage phase imbalance (%) 16
5.3 - Power connection/disconnect switch 16
5.4 - Recommended wire sections 16
5.5 - Power cable entry 17
5.6 - Field control wiring 17
5.7 - 24 V power reserve for the user 17

6 - APPLICATION DATA 18
6.1 - Operating limits 18
6.2 - Minimum chilled water flow 18
6.3 - Maximum chilled water flow 18
6.4 - Condenser water flow rate 18
6.5 - Standard and optional number of water passes 18
6.6 - Evaporator and condenser water flow rates 18
6.7 - Variable flow evaporator 19
6.8 - System minimum water volume 19
6.9 - Evaporator pressure drop curves 20
6.10 - Condenser pressure drop curves 20

7 - WATER CONNECTIONS 21
7.1 - Operating precautions 21
7.2 - Water connections 21
7.3 - Flow control 22
7.4 - Evaporator and condenser water box bolt tightening 22
7.5 - Operation of two units in Lead/Lag mode 22

8 - OPERATING MODE FOR HEAT PUMP UNITS 61XWH 23
8.1 - Heating mode 23
8.2 - Simultaneous operating use (Heating and cooling): 23

9 - MAJOR SYSTEM COMPONENTS AND OPERATION DATA 23
9.1 - Direct-drive twin-screw compressor with variable capacity slide valve 23
9.2 - Pressure vessels 23
9.3 - Detection of the air pressurization of the electrical cabinet 24
9.4 - Electronic expansion valve (EXV) 24
9.5 - Moisture indicator 24
9.6 - Filter drier 24
9.7 - Sensors 24
9.8 - SRMCR high-pressure safety circuit 24

CONTENTS

10 - OPTIONS AND ACCESSORIES **26**

11 - STANDARD MAINTENANCE **28**
11.1 - Level 1 maintenance 28
11.2 - Level 2 maintenance 28
11.3 - Level 3 (or higher) maintenance 28
11.4 - Tightening of the electrical connections 29
11.5 - Tightening torques for the main bolts and screws 30
11.6 - Evaporator and condenser maintenance 30
11.7 - Compressor maintenance 30
11.8 - Expansion valves maintenance 30
11.9 - High pressure safety loop periodic test 31

12 - FINAL SHUTDOWN **32**
12.1 - Shutting down 32
12.2 - Recommendations for disassembly 32
12.3 - Fluids to be recovered for treatment 32
12.4 - Materials to be recovered for recycling 32
12.5 - Waste electrical and electronic equipment (WEEE) 32

13 - START-UP CHECKLIST FOR 61XWH UNIT (USE FOR JOB FILE) **33**

This manual applies to the following three 61XWH unit types:

- **61XWHLZE Low temperature water source heat pump**
- **61XWH-ZE Medium temperature water source heat pump**
- **61XWHHZE High temperature water source heat pump**

For the operation of the control please refer to the SmartVu™ control manual.

The illustrations on the front cover and inside this document are for illustrative purposes only and not part of any offer for sale or contract.

1 - INTRODUCTION

The 61XWH units are designed to cool and heat water (or brine) for the air conditioning and heating of buildings and industrial processes.

Prior to the initial start-up of the 61XWH units, the people involved in the on-site installation, start-up, operation, and maintenance of this unit must be thoroughly familiar with these instructions and the specific project data for the installation site (Machine room, etc).

They are designed for a theoretical operating life of 15 years. Beyond this operating period, the manufacturer recommends carrying out periodic requalification of the cooling circuit according to the national regulations in force. Subject to the application of more restrictive national regulations, the manufacturer then recommends respecting a periodicity of 5 years for this requalification.

This manual provides the necessary information to familiarize yourself with the control system before performing start-up procedures. The procedures in this manual are arranged in the sequence required for machine installation, start-up, operation and maintenance.

Always ensure that all required safety measures are followed, including those in this document, such as: wearing protective clothing (gloves, safety glasses and shoes) using appropriate tools, employing qualified and skilled technicians (electricians, refrigeration engineers) fully trained in the use of flammable refrigerants and following local regulations (see annexe E in EN 378 -4 - Guidelines for repairs of equipment using flammable refrigerants).

To find out, if these products comply with European directives (machine safety, low voltage, electromagnetic compatibility, equipment under pressure etc.) check the declarations of conformity for these products.

According to ISO-817, R1234ze(E) is classified in safety group A2L: lower flammability. One of the characteristic of this refrigerant is the absence of flammable mixture with air under 21°C of ambiance and controlled humidity conditions. However when humidity or temperature goes up, this refrigerant can become flammable and can represent a potential danger if flammability risks are not properly mitigated within the machine room installation.

Local building codes and safety standards shall be followed. In absence of local codes and standards, please refer to EN-378 (2012) (Safety requirements for substances classified A2) or to ISO-5149 (2014) (for substances classified A2L) as a guide. Customer shall obtain approval from the local building authorities.

Carrier also provides additional guidelines for the safe use of R1234ze(E) refrigerant that should be added to the requirements of safety standards and building codes to insure that the risks are minimised to acceptable levels.

Refer to paragraph 2 "additional guidelines for safe use of R1234ze(E) refrigerant in machinery rooms"

For further details on physical properties, flammability & toxicity characteristics, hazards Identification, installation safety requirements, etc, refer to standards such as:

- **ASHRAE 34, EN 378, ISO-817 and ISO-5149**
- **Safety Data Sheet (SDS) supplied by the refrigerant manufacturer**
- **European union's REACH database (Registration, Evaluation, Authorisation and Restriction of Chemicals)**

1.1 - Installation safety considerations

The 61XWH heat pumps are classified as "indirect heat exchange system" and are designated to be installed in a special machinery room (Class C as per ISO-5149 and EN-378) where **only authorized personnel** have access, who are acquainted with general and special safety precautions of the establishment and are qualified and trained in monitoring and maintenance. The access limitation device must be installed by the customer (e.g. cut-off, enclosure).

The refrigerant R1234ze(E) falls into refrigerant safety group A2L in accordance to ISO-5149 and A2 in accordance to EN-378. No Charge limitations apply for the level of occupancy is 'C'. Please refer to these standards for further details. This level needs to be confirmed by the customer.

Refer also to paragraph 2 for "Additional guidelines for safe use of R1234ze(E) refrigerant in machinery rooms"

After the unit has been received, when it is ready to be installed or reinstalled, and before it is started up, it must be inspected for damage. Check that the refrigerant circuit(s) is (are) intact, especially that no components or pipes have shifted (e.g. following a shock). If in doubt, carry out a leak tightness check and verify with the manufacturer that the circuit integrity has not been impaired. If damage is detected upon receipt, immediately fill a claim with the shipping company.

Carrier strongly recommends employing a specialised company to unload the machine.

It is compulsory to wear personal protection equipment.

Do not remove the skid or the packaging until the unit is in its final position. These units can be moved with a fork lift truck, as long as the forks are positioned in the right place and direction on the unit.

The units can also be lifted with slings, using only the designated lifting points marked on the unit.

Use slings or lifting beams with the correct capacity, and always follow the lifting instructions on the certified drawings supplied with the unit. Do not tilt the unit more than 15°.

Safety is only guaranteed, if these instructions are carefully followed. If this is not the case, there is a risk of material deterioration and injuries to personnel.

Never cover any protection devices.

This applies to the relief valves in the refrigerant or heat transfer medium circuits, and the pressure switches.

Ensure that the valves are correctly installed, before operating the unit.

DO NOT OBSTRUCT ANY PROTECTIVE DEVICES:

This applies to any fusible plugs, rupture disks and valves fitted on the refrigerant or heat transfer fluid circuits. Check whether the original protection plugs are still present at the valve outlets. These plugs are generally made of plastic and should not be used. If they are still present, please remove them. Fit devices at the valve or discharge piping outlets to prevent the penetration of foreign bodies (dust, building debris, etc.) and atmospheric agents (water can form rust or ice). These devices, as well as the discharge piping, must not impair operation or lead to a pressure drop that is higher than 10% of the set pressure.

CLASSIFICATION AND CONTROL:

In accordance with the Pressure Equipment Directive and national usage monitoring regulations in the European Union, the protective devices fitted to these machines are classified as follows:

	Safety device(1)	Device for damage limitation in the event of an external fire(2)
Refrigerant Side		
High pressure safety loop(3)	X	
External relief valve(4)		X
Rupture disk		X
Heat transfer fuid side		
External relief valve	(5)	(5)

(1) Classified for protection in normal service situations.
(2) Classified for protection in abnormal service situations. These accessories are sized for fires with a thermal flow of 10kW/m². No combustible matter should be placed within 6.5m of the unit.
(3) High pressure safety loop = SRMCR as described in component section of this manual and in electrical diagram.
(4) The instantaneous overpressure limitation of 10% of the operating pressure does not apply to this abnormal service situation.
The control pressure can be higher than the service pressure. In this case, either the design temperature or the high pressure switch ensures that the service pressure is not exceeded in normal service situations.
(5) The selection of these relief valves must be made by the personnel responsible for completing the hydraulic installation.

All factory-installed relief valves are lead-sealed to prevent cany calibration change. The external relief valves must always be vented to outside if the units are installed in a closed space. Refer to the installation regulations, for example those of European standard EN 378 and EN 13136. These pipes must be installed in a way that ensures that people and property are not exposed to vented refrigerant. As the fluids can be diffused in the air, ensure that refrigerant is discharged away from building air intakes, relief valves must be checked periodically. The valves must be checked periodically.

The safety device shall be tested at least once a year to verify good operation and cut out value.

An example of test procedure without removing the pressure switch **is given in Section 11.9 of this manual**.

If the relief valves are installed on a change-over manifold, this is equipped with a relief valve on each of the two outlets. Only one of the two relief valves is in operation, the other one is isolated. Never leave the change-over valve in the intermediate position, i.e. with both ways open (locate the control element in the stop position). If a relief valve is removed for checking or replacement please ensure that there is always an active relief valve on each of the change-over valves installed in the unit.

All factory-installed relief valves are lead-sealed to prevent any calibration change.

The external relief valves are designed and installed to ensure damage limitation in case of a fire.

In accordance with the regulations applied for the design, the European directive on equipment under pressure and in accordance with the national usage regulations:

- These relief valves (and rupture disk if used) are not safety accessories but damage limitation accessories in case of a fire.
- The high pressure switches are the safety accessories.

The relief valve must only be removed if the fire risk is fully controlled and after checking that this is allowed by local regulations and authorities. This is the responsibility of the operator.

When the unit is subjected to fire, safety devices prevent rupture due to over-pressure by releasing refrigerant. The fluid may then be decomposed into toxic residues when subjected to the flame:

- Stay away from the unit
- Set up warnings and recommendations for personnel in charge to stop the fire.
- Fire extinguishers appropriate to the system and the refrigerant type must be easily accessible.

The external relief valves must be connected to discharge pipes for units installed in a room. Refer to the installation regulations, for example those of European standards EN-378.

These standards include a sizing method and examples for configuration and calculation. Under certain conditions they permit connection of several valves to the same discharge pipe.

Carrier recommends using flexible hose to connect the relief valves to discharge pipe. Special care shall be taken so that coupling to discharge pipe is not creating mechanical stress on relief valve connection.

These pipes must be installed in a way that ensures that people and property are not exposed to refrigerant leaks. These fluids may be diffused in the air, but far away from any building air intake, or they must be discharged in a quantity that is appropriate for a suitably absorbing environment (Note that the R1234ze(E) refrigerant is heavier than air).

It is recommended to install an indicating device to show if part of the refrigerant has leaked from the valve. The presence of oil at the outlet orifice is a useful indicator that refrigerant has leaked. Keep this orifice clean to ensure that any leaks are obvious.

The calibration of a valve that has leaked is generally lower than its original calibration. The new calibration may affect the operating range. To avoid a nuisance tripping or leaks, replace or re-calibrate the valve.

Periodic check of the relief valves: See paragraph 1.3 “Maintenance safety considerations”.

The electrical box must be supplied with fresh air source.

This must be done by connecting the interface on the top of the electrical box with an air duct. The fresh air should be sucked from outside the machinery room in an open air area. If this is not possible, it is acceptable to suck fresh air inside the machinery room but the following criteria must be respected regarding the ventilation duct inlet:

- Located at least one meter higher than the highest point of the unit
- Located at least 2 meters away from the unit
- The inlet air duct must be sized according to table below (Maximum air duct pressure drop for a given air flow)

In addition, the following constraints must be fulfilled:

- The junction between the air duct and the electrical box interface must be tight
- The inlet air duct must be sized to guarantee below maximum pressure drop in any operating condition (including fooling)

61XWH model	Air flow (m^3/h)	Air duct maximum pressure drop (Pa)
3	40	10
5 / 7	60	20
10 / 14 / 15 / 17	120	40

- The electrical box fan filter if any has to be serviceable in order to be checked, cleaned and replaced if necessary.
- The inlet of the duct should be equipped with a dust filter. It’s filtering classification shall depend on dust occurrence. G3 class per EN 779 is recommended.

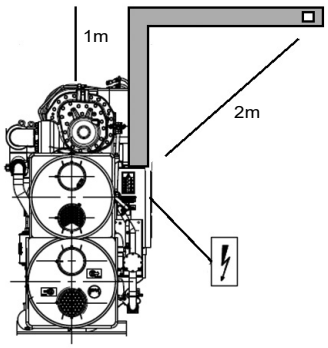

Provide a drain in the discharge circuit, close to each relief valve, to avoid an accumulation of condensate or rain water.

Ensure good ventilation, as accumulation of refrigerant in an enclosed space can displace oxygen and cause asphyxiation or explosions.

Inhalation of high concentrations of vapour is harmful and may cause heart irregularities, unconsciousness, or death. Vapour is heavier than air and reduces the amount of oxygen available for breathing. These products cause eye and skin irritation. Decomposition products are hazardous.

1.2 - Equipment and components under pressure

The units are intended to be stored and operate in an environment where the ambient temperature must not be less than the lowest allowable temperature indicated on the nameplate. See section “Pressure vessels”.

1.3 - Maintenance safety considerations

Refer to EN378 norm for safe use of refrigerant in machinery rooms, especially for appropriate ventilation when using R1234ze A2L fluid.

Engineers working on the electric or refrigeration components must be authorized, trained and fully qualified particularly in the use of flammable refrigerants.

Never clean the unit with a fluid at a temperature higher than 45°C. An over temperature could generate an over pressure and make the relief valve discharge the refrigerant.

All refrigerant circuit repairs must be carried out by a trained person fully qualified to work on these units who must have been:

- **Trained and be familiar with the equipment and the installation (including the refrigerant used).**
- **Informed of the risks of possible explosive atmospheres and can preventing them.They also have to be informed of the working procedure for preventing the risk of flammable refrigerant leaking into the atmosphere as much as possible.**

All welding operations must be carried out by qualified specialists. Maintenance operation have to be done according to national rules and regulations that apply to explosive atmospheres (e.g. reference to EN 1127-1)

When performing service on the refrigeration circuit, ventilate the area prior to performing any work and check for presence of refrigerant. <u>During service operation, continue to ventilate the air</u> using the machine room ventilation or temporary fans.

Before opening a refrigerant circuit, purge and consult the pressure gauges. Reclaim the refrigerant using a proper refrigerant reclaim device and reclaim cylinders. The refrigerant circuit should be pumped down and then purged with nitrogen before servicing.

During a brazing operation, the refrigerant circuit should be purged with nitrogen. Also when servicing the refrigerant circuit, all ignition sources should be disabled.

The insulation must be removed and heat generation must be limited by using a wet cloth.

Any manipulation (opening or closing) of a shut-off valve must be carried out by a qualified and authorised engineer. These procedures must be carried out with the unit shut-down.

NOTE: The unit must never be left shut down with the liquid line valve closed, as liquid refrigerant can be trapped between this valve and the expansion device (This valve is situated on the liquid line before the filter drier). In case of presence of a shut-off valve on the suction line (between evaporator and compressor -factory option n°92), never close at the same time the shut-off valve situated on the discharge line (between compressor and condenser). One exception can be made in case of compressor removal from the refrigerant circuit.

<u>As a consequence, in case of closing the compressor discharge valve (condenser repair, etc.) never close simultaneously the service valve (upstream the filter dryer in the liquid line) and always reclaim the refrigerant in the filter dryer.</u>

Equip the engineers that work on the unit as follows:

Personal protection equipment (PPE) (1)	Operations		
	Handling	Maintenance, service	Welding or brazing(2)
Protective gloves, eye protection, safety shoe, protective clothing.	X	X	X
Ear protection.		X	X
Filtering respirator.			X

(1) We recommend to follow the instructions in EN 378-3.
(2) Performed in the presence of A1 refrigerant according to EN 378-1.

Never work on a unit that is still energized.

Never work on any of the electrical components, until the general power supply to the unit has been cut using the disconnect switch(es) in the control box(es).

If any maintenance operations are carried out on the unit, lock the power supply circuit in the open position ahead of the machine.

If the work is interrupted, always ensure that all circuits are still deenergized before resuming the work.

ATTENTION:

Even if the unit has been switched off, the power circuit remains energized, unless the unit or circuit disconnect switch is open. Refer to the wiring diagram for further details. Attach appropriate safety labels.

OPERATING CHECKS:

Important information regarding the refrigerant used:

This product contains fluorinated greenhouse gas covered by the Kyoto protocol.

Fluid type: R1234ze(E)

Global Warming Potential (GWP): 7 (source IPCC Assessment Report 4)

This refrigerant is classified group 2 “non-dangerous” according to the critera of Pressure Equipment Directive (PED) both 97/23/CE and 2014/68/CE.

CAUTION:

- ***Any handling of refrigerant contained in this product must comply with the F-Gas Directive N° 517/2014 and any other applicable local legislation.***
- ***Ensure that the refrigerant is never released to the atmosphere during installation, maintenance or equipment disposal.***
- ***The deliberate gas release into the atmosphere is strictly not allowed.***
- ***If a refrigerant leak is detected, ensure that it is stopped and repaired as quickly as possible.***
- ***Only a qualified and certified personnel can perform installation operations, maintenance, refrigerant circuit leak test as well as the equipment disposal and the refrigerant recovering.***
- ***The gas recovery for recycling, regeneration or destruction is at customer charge.***
- ***The customer has to carry out periodic leak tests***

In the European Union, article 2 of regulation (EU) No. 517/2014 makes these mandatory and sets their frequency. The table below shows this frequency, as originally published in the regulation. Check whether an inspection frequency is also set by other regulations or standards applicable to your system (e.g. EN 378, ISO5149, etc.).

System WITHOUT leakage detection		No check	12 months	6 months	3 months
System WITH leakage detection		No check	24 months	12 months	6 months
Refrigerant charge/ circuit (CO_2 equivalent)		< 5 tonnes	5 ≤ charge < 50 tonnes	5 ≤ charge < 500 tonnes	Charge > 500 tonnes(1)
Refrigerant charge/ Circuit (kg)	R134a (GWP 1430)	Charge < 3,5 kg	3,5 ≤ charge < 34,9 kg	34,9 ≤ charge < 349,7 kg	Charge > 349,7 kg
	R407C (GWP 1774)	Charge < 2,8 kg	2,8 ≤ charge < 28,2 kg	28,2 ≤ charge < 281,9 kg	charge > 281,9 kg
	R410A (GWP 2088)	Charge < 2,4 kg	2,4 ≤ charge < 23,9 kg	23,9 ≤ charge < 239,5 kg	Charge > 239,5 kg
	HFO's : R1234ze(E)	No requirement			

(1) From 01/01/2017, units must be equipped with a leakage detection system

- ***A logbook must be established for the systems that require a tightness check. It should contain the quantity and the type of fluid present within the installation (added and recovered), the quantity of recycled fluid/ regenerated/destroyed, the date and output of the leak test, the designation of the operator and its belonging company, etc.***
- ***Contact your local dealer or installer if you have any questions.***

PROTECTION DEVICE CHECKS:

- **Periodic inspections of the safety devices and external overpressure devices (external relief valves) must be carried out in accordance with national regulations.**

The company or organisation that conducts a pressure switch test shall establish and implement a detailed procedure to fix:

- Safety measures
- Measuring equipment calibration
- Validating operation of protective devices
- Test protocols
- Recommissioning of the equipment.

An example of test procedure without removing the pressure switch is given in Section 11.9 of this manual. Consult Carrier Service for this type of test.

CAUTION: If the test leads to replacing the pressure switch, it is necessary to recover the refrigerant charge, these pressure switches are not installed on automatic valves (Schraeder type).

At least once a year thoroughly inspect the protection devices (valves). If the machine operates in a corrosive environment, inspect the protection devices more frequently.

Regularly carry out leak tests and immediately repair any leaks (follow local codes)

Ensure regularly that the vibration levels remain acceptable and close to those at the initial unit start-up.

Change the refrigerant when there are equipment failures, following a procedure such as the one described in NF E29-795 or carry out a refrigerant analysis in a specialist laboratory.

If the refrigerant circuit remains open for longer than a day after an intervention (such as a component replacement), the openings must be plugged and the circuit must be charged with nitrogen (inertia principle). The objective is to prevent penetration of atmospheric humidity and the resulting corrosion on the internal walls and on non-protected steel surfaces.

1.4 - Repair safety considerations

Equip the engineers that work on the unit with the protections described in section 1.3 above.

It is compulsory to wear personal protection equipment and a detector of explosive atmospheres.

The insulation must be removed and warming up must be limited by using a wet cloth.

Before opening the unit, always ensure that the circuit has been purged.

If work on the evaporator is required, ensure that the piping from the compressor is no longer pressurised (as the valve is not leaktight in the compressor direction.)

All installation parts must be maintained by the personnel in charge, in order to avoid material deterioration and injuries to people. Faults and leaks must be repaired immediately. The authorized technician must have the responsibility to repair the fault immediately. Each time repairs have been carried out to the unit, the operation of the protection devices must be re-checked.

Comply with the regulations and recommendations in unit and HVAC installation safety standards, such as: EN-378, ISO-5149, etc.

If a leak occurs or if the refrigerant becomes contaminated (e.g. by a short circuit in a motor) remove the complete charge using a recovery unit and store the refrigerant in mobile containers.

Repair the leak detected and recharge the circuit with the total R1234ze(E) charge, as indicated on the unit name plate. Certain parts of the circuit can be isolated. Only charge liquid refrigerant R1234ze(E) at the liquid line.

Ensure that you are using the correct refrigerant type before recharging the unit.

Charging any refrigerant other than the original charge type R1234ze(E) will impair machine operation and can even lead to a destruction of the compressors. The compressors operating with this refrigerant type are lubricated with a specific synthetic polyolester oil.

Do not use oxygen to purge lines or to pressurize a machine for any purpose. Oxygen gas reacts violently with oil, grease, and other common substances. Nitrogen should be used to purge the system. It should also be used during brazing.

Never exceed the specified maximum operating pressures. Verify the allowable maximum high- and low-side test pressures by checking the instructions in this manual and the pressures given on the unit name plate.

Do not use air for leak testing. Use only refrigerant or dry nitrogen.

Do not unweld or flamecut the refrigerant lines or any refrigerant circuit component until all refrigerant (liquid and vapour) has been removed from the unit and the system has been purged with nitrogen. Traces of vapour should be displaced with dry air nitrogen. Refrigerant in contact with an open flame produces toxic gases.

The necessary protection equipment must be available, and appropriate fire extinguishers for the system and the refrigerant type used must be within easy reach.

Do not siphon refrigerant.

Avoid contact with liquid refrigerant on the skin or splashing it into the eyes. Use safety goggles. Wash any spills from the skin with soap and water. If liquid refrigerant enters the eyes, immediately and abundantly flush the eyes with water and consult a doctor.

The accidental releases of the refrigerant, due to small leaks or significant discharges following the rupture of a pipe or an unexpected release from a relief valve, can cause frostbites and burns to personnel exposed. Do not ignore such injuries. Installers, owners and especially service engineers for these units must:

- Seek medical attention before treating such injuries.
- Have access to a first-aid kit, especially for treating eye injuries.

We recommend to apply standard EN-378.

Never apply an open flame or live steam to a refrigerant container. Dangerous overpressure can result.

During refrigerant removal and storage operations follow applicable regulations. These regulations, permitting conditioning and recovery of halogenated hydrocarbons under optimum quality conditions for the products and optimum safety conditions for people, property and the environment are described in standard NF E29-795.

Any refrigerant transfer and recovery operations must be carried out using a transfer unit. A 1/2" SAE connector on the manual liquid line valve is supplied with all units for connection to the transfer station. The units must never be modified to add refrigerant and oil charging, removal and purging devices. All these devices are provided with the units. Please refer to the certified dimensional drawings for the units.

Never use the compressor as a vacuum pump. It would damage the compressor.

Do not re-use disposable (non-returnable) cylinders or attempt to refill them. It is dangerous and illegal. Proper refrigerant cylinders designated and marked for R1234ze(E) should be used. When cylinders are empty, evacuate the remaining gas pressure, and move the cylinders to a place designated for their recovery. Do not incinerate.

ATTENTION: Only use refrigerant R1234ze(E), in accordance with AHRI 700-2014 (Air conditioning, Heating and Refrigeration Institute). The use of any other refrigerant may expose users and operators to unexpected risks.

Do not attempt to remove refrigerant circuit components or fittings, while the machine is under pressure or while it is running. Be sure pressure is at 0 kPa and has been purged with nitrogen before removing components or opening a circuit.

Do not attempt to repair or recondition any safety devices when corrosion or build-up of foreign material (rust, dirt, scale, etc.) is found within the valve body or mechanism. If necessary, replace the device. Do not install relief valves in series or backwards.

ATTENTION: No part of the unit must be used as a walk-way, rack or support. Periodically check and repair or if necessary replace any component or piping that shows signs of damage.

The refrigerant lines can break under the weight and release refrigerant, causing personal injury.

Do not climb on a machine. Use a platform, or staging to work at higher levels.

Use mechanical lifting equipment (crane, hoist, winch, etc.) to lift or move heavy components. For lighter components, use lifting equipment when there is a risk of slipping or losing your balance.

Use only original replacement parts for any repair or component replacement. Consult the list of replacement parts that corresponds to the specification of the original equipment.

Do not drain water circuits containing industrial brines, without informing the technical service department at the installation site or a competent body first.

Close the entering and leaving water shutoff valves and purge the unit water circuit, before working on the components installed on the circuit (screen filter, pump, water flow switch, etc.).

Do not loosen the water box bolts until the water boxes have been completely drained.

Periodically inspect all valves, fittings and pipes of the refrigerant and hydronic circuits to ensure that they do not show any corrosion or any signs of leaks.

It is recommended to wear ear defenders, when working near the unit and the unit is in operation.

2.1 - Check equipment received

- Inspect the unit for damage or missing parts. If damage is detected, or if shipment is incomplete, immediately file a claim with the shipping company.
- Confirm that the unit received is the one ordered. Compare the name plate data with the order.
- The unit name plate must include the following information:
  - Version number
  - Model number
  - CE marking
  - Serial number
  - Year of manufacture and test date
  - Fluid being transported
  - Refrigerant used and refrigerant class
  - Refrigerant charge per circuit
  - Containment fluid to be used
  - TS: Min./max. allowable temperature (high and low pressure side)(1)
  - TS: Min./max. allowable temperature (high and low pressure side)
  - Pressure switch cut-out pressures
  - Unit leak test pressure
  - Voltage, frequency, number of phases
  - Maximum current drawn
  - Maximum power input
  - Unit net weight
- Confirm that all accessories ordered for on-site installation have been delivered, and are complete and undamaged.

The unit must be checked periodically during its whole operating life to ensure that no shocks (handling accessories, tools etc.) have damaged it. If necessary, the damaged parts must be repaired or replaced. See also chapter 12 "Standard maintenance".

(1) The TS maxi of the high pressure side shown in the unit name plate:
- Corresponds to a superheated state of the refrigerant,
- Affects only some components or parts of components of the high pressure side,
- As a consequence, may be higher than the TS of the other components of the high pressure side.

If needed, refer to the PID provided for your unit, it shows this temperatures repartition.

2.2 - Moving and sitting the unit

2.2.1 - Moving

See chapter 1.1 "Installation safety considerations".

CAUTION: Only use slings at the designated lifting points which are marked on the unit.

2.2.2 - Sitting the unit

Always refer to the chapter "Dimensions and clearances" to confirm that there is adequate space for all connections and service operations. For the centre of gravity coordinates, the position of the unit mounting holes, and the weight distribution points, refer to the certified dimensional drawing supplied with the unit.

Typical applications of these units are in refrigeration systems, and they do not require earthquake resistance. Earthquake resistance has not been verified.

Before siting the unit check that:
- The permitted loading at the site is adequate or that appropriate strenghtening measures have been taken.
- The unit is installed level on an even surface (maximum tolerance is 5 mm in both axes).
- There is adequate space above the unit for air flow and to ensure access to the components.
- The number of support points is adequate and that they are in the right places.
- The location is not subject to flooding.

CAUTION: Lift and set down the unit with great care. Tilting and jarring can damage the unit and impair unit operation.

2.2.3 - Checks before system start-up

Before the start-up of the refrigeration system, the complete installation, including the refrigeration system must be verified against the installation drawings, dimensional drawings, system piping and instrumentation diagrams and the wiring diagrams.

During the installation test national regulations must be followed. If no national regulation exists, standards such EN-378 or ISO-5149 can be used as a guide.

External visual installation checks:
- Ensure that the machine is charged with refrigerant. Verify on the unit nameplate that the 'fluid being transported' is R1234ze(E) and is not nitrogen.
- Compare the complete installation with the refrigeration system and power circuit diagrams.
- Check that all protection documents and equipment provided by the manufacturer (dimensional drawings, PID, declarations etc.) to comply with the regulations are present.
- Verify that the environmental safety and protection and devices and arrangements provided by the manufacturer to comply with the regulations are in place.
- Verify that all document for pressure containers, certificates, name plates, files, instruction manuals provided by the manufacturer to comply with the regulations are present.
- Verify the free passage of access and safety routes.
- Check that ventilation in the plant room is adequate.
- Check that refrigerant detectors are present.
- Verify the instructions and directives to prevent the deliberate removal of refrigerant gases that are harmful to the environment.
- Verify the installation of connections.
- Verify the supports and fixing elements (materials, routing and connection).
- Verify the quality of welds and other joints.
- Check the protection against mechanical damage.
- Check the protection against heat.
- Check the protection of moving parts.
- Verify the accessibility for maintenance or repair and to check the piping.
- Verify the status of the valves.
- Verify the quality of the thermal insulation and of the vapour barriers
- Check the condition of the insulation of the 400 V cables.

3 - DIMENSIONS, CLEARANCES

3.1 - 61XWHLZE/61XWH-ZE/61XWHHZE 03-05-07

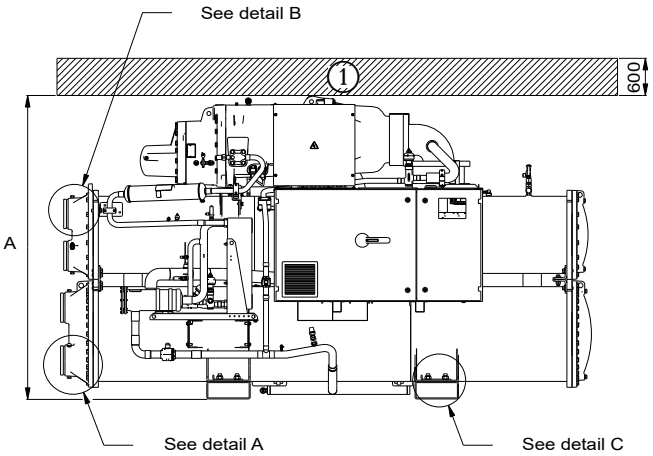

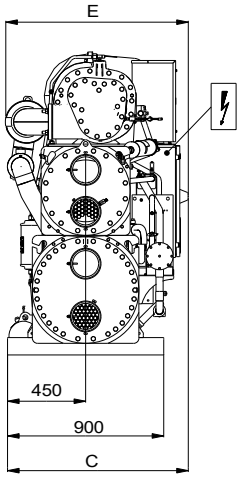

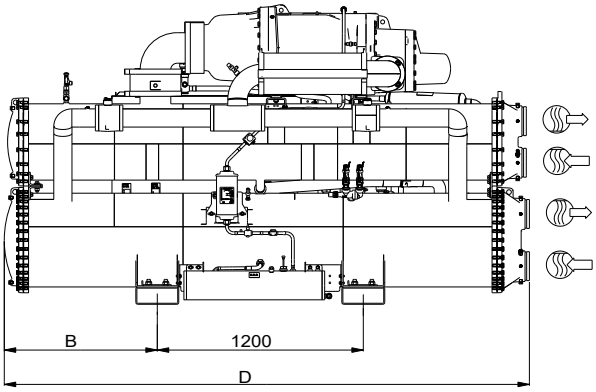

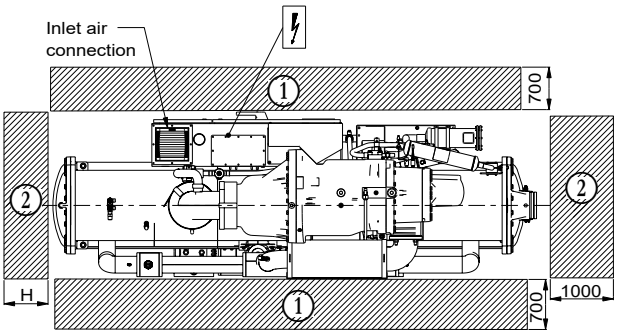

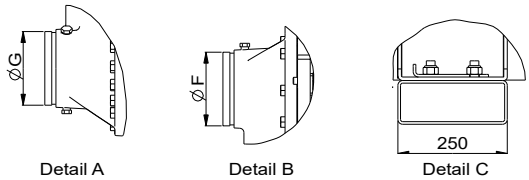

61XWHLZE/61XWH-ZE/61XWHHZE								
	A	B	C	D	E	F	G	H
Model	Dimensions in mm							
3	1594	723	981	2724	982	141,3	141,3	2600
5	1745	891	1041	3059	1039	168,3	168,3	2900
7	1968	1007	1079	3290	1170	219,1	219,1	3100

Legend

All dimensions are given in mm

- (1) → Services clearances required
- (2) → Space required to remove cooler tubes
- Inlet water
- Outlet water
- Electrical supply entry

NOTES:

- **Drawings are not contractually binding. Before designing an installation, consult the certified dimensional drawings supplied with the unit or available on request.**
- **For the positioning of the fixing points, weight distribution and centre of gravity coordinates please refer to the dimensional drawings.**

3.2 - 61XWHLZE/61XWH-ZE 10-14-15-17; 61XWHHZE 10-15

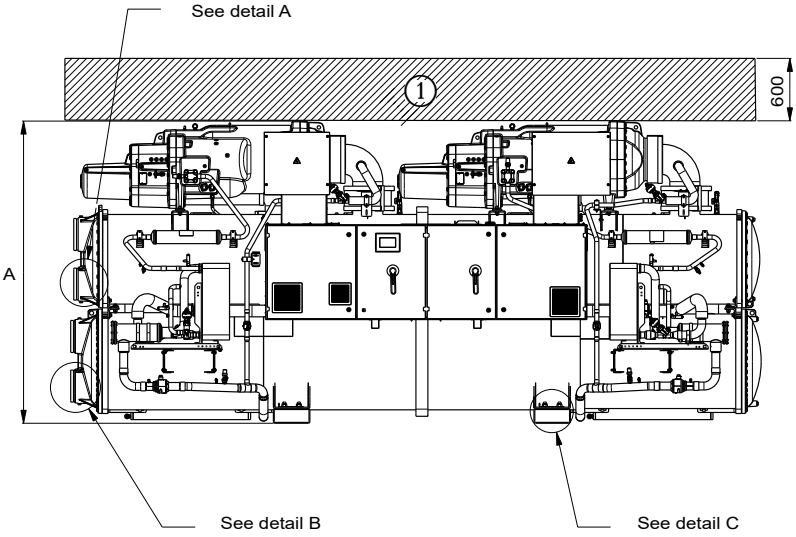

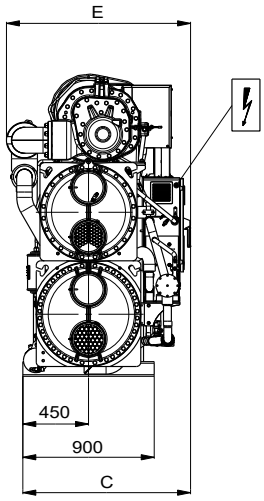

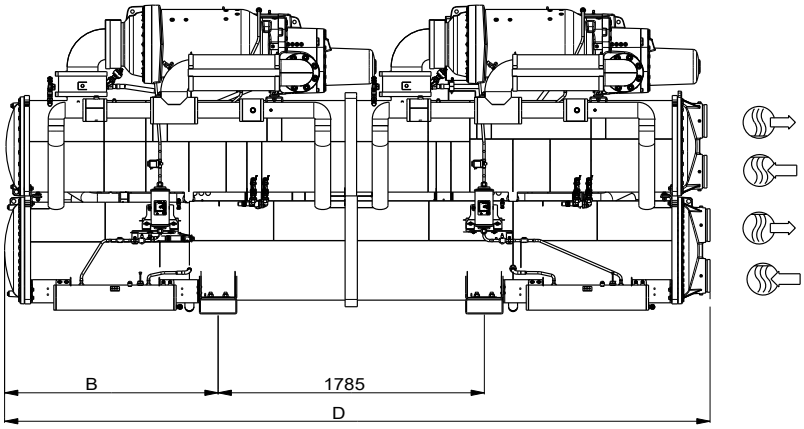

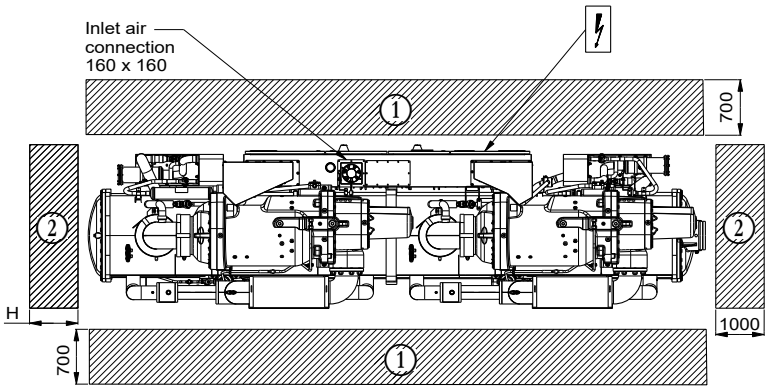

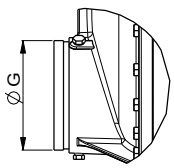

Detail A

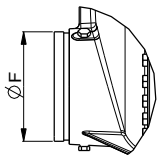

Detail B

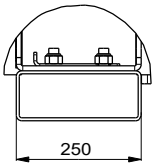

Detail C

61XWHLZE/61XWH-ZE								
	A	B	C	D	E	F	G	H
Model	Dimensions in mm							
10	2002	1432	1124	4730	1124	219,1	219,1	4500
14	2070	1432	1148	4730	1237	219,1	219,1	4500
15	2305	1458	1399	4790	1264	219,1	219,1	4500
17	2305	1458	1399	4790	1264	219,1	219,1	4500

61XWHHZE								
	A	B	C	D	E	F	G	H
Model	Dimensions in mm							
10	2002	1432	1124	4730	1124	219,1	219,1	4500
15	2305	1458	1417	4790	1282	219,1	219,1	4500

Legend

All dimensions are given in mm

- (1) → Services clearances required
- (2) → Space required to remove cooler tubes
- Inlet water
- Outlet water
- Electrical supply entry

NOTES:

- **Drawings are not contractually binding. Before designing an installation, consult the certified dimensional drawings supplied with the unit or available on request.**
- **For the positioning of the fixing points, weight distribution and centre of gravity coordinates please refer to the dimensional drawings.**

4 - PHYSICAL AND ELECTRICAL DATA

4.1 - Physical data

61XWHLZE/61XWH-ZE/61XWHHZE	Model	3	5	7	10	14	15	17
Sound levels - standard unit								
Sound power level (1)	dB(A)	93	97	100	100	103	103	103
Sound pressure level at 1m (2)	dB(A)	76	80	82	81	84	84	84
Sound levels - option 257 (3)								
Sound power level (1)	dB(A)	-	94	98	97	101	101	101
Sound pressure level at 1m (2)	dB(A)	-	76	80	78	82	82	82
Dimensions - 61XWHLZE/61XWH-ZE								
Length	mm	2724	3059	3290	4730	4730	4790	4790
Width	mm	981	1041	1079	1125	1148	1399	1399
Height	mm	1594	1745	1968	2002	2070	2305	2305
Dimensions - 61XWHHZE								
Length	mm	2724	3059	3290	4730	-	4790	-
Width	mm	981	1041	1079	1125	-	1417	-
Height	mm	1594	1745	1968	2002	-	2305	-
Operating weight (4)	kg	2054	2942	4147	7265	8031	9519	9519
Compressors		Semi-hermetic 06T screw compressors, 50 r/s						
Circuit A	-	1	1	1	1	1	1	1
Circuit B	-	-	-	-	1	1	1	1
Refrigerant - 61XWHLZE (5)		R1234ze						
Circuit A	kg	107	168	237	154	176	237	226
	teq CO_2	0,7	1,2	1,7	1,1	1,2	1,7	1,6
Circuit B	kg	-	-	-	154	187	237	231
	teq CO_2	-	-	-	1,1	1,3	1,7	1,6
Refrigerant - 61XWH-ZE (5)		R1234ze						
Circuit A	kg	97	153	215	140	160	215	205
	teq CO_2	0,7	1,1	1,5	1,0	1,1	1,5	1,4
Circuit B	kg	-	-	-	140	170	215	210
	teq CO_2	-	-	-	1,0	1,2	1,5	1,5
Refrigerant - 61XWHHZE (5)		R1234ze						
Circuit A	kg	88	138	195	140	-	195	-
	teq CO_2	0,6	1,0	1,4	1,0	-	1,4	-
Circuit B	kg	-	-	-	140	-	195	-
	teq CO_2	-	-	-	1,0	-	1,4	-
Oil - standard unit								
Circuit A	l	20	20	25	20	25	25	25
Circuit B	l	-	-	-	20	25	25	25
Capacity control		SmartVu™, electronic expansion valves (EXV)						
Unit minimum stage	%	50	50	50	25	25	25	25
Evaporator		Multi-pipe flooded type						
Water volume	l	61	101	154	293	321	354	354
Water connections (Victaulic)	in	5	6	8	8	8	8	8
Drain and vent connections (NPT)	in	3/8	3/8	3/8	3/8	3/8	3/8	3/8
Max. water-side operating pressure	kPa	1000	1000	1000	1000	1000	1000	1000
Condenser		Multi-pipe flooded type						
Water volume	l	55	103	148	316	340	426	426
Water connections (Victaulic)	in	5	6	8	8	8	8	8
Drain and vent connections (NPT)	in	3/8	3/8	3/8	3/8	3/8	3/8	3/8
Max. water-side operating pressure	kPa	1000	1000	1000	1000	1000	1000	1000

(1) In dB ref=10^{-12} W, (A) weighting. Dualnumber noise emission values in accordance with ISO 4871 (with an associated uncertainty of +/-3dB(A)). Measured in accordance with ISO 9614-1.
(2) In dB ref 20µPa, (A) weighting. Dualnumber noise emission values in accordance with ISO 4871 (with an associated uncertainty of +/-3dB(A)). For information, calculated from the sound power level Lw(A).
(3) Option 257 = Low noise level
(4) Weight shown is guideline only. Please refer to the unit nameplate
(5) Refrigerant charge shown is guideline only. Charge may differ according to options. Please refer to the unit nameplate

4.2 - Electrical data

61XWHLZE / 61XWH-ZE	Model	3	5	7	10	14	15	17
Power circuit								
Nom. power supply	V-ph-Hz	400-3-50						
Voltage range	V	360-440						
Control circuit		24 V via the built-in transformer						
Maximum start-up current - Standard unit (1)								
Circuit A	A	1210	1828	1919	1828	1919	1919	1919
Circuit B	A	-	-	-	1828	1919	1919	1919
Option 81	A	-	-	-	2158	2425	2425	2407
Maximum start-up current - Star/delta start option (2)								
Circuit A	A	388	587	-	587	-	-	-
Circuit B	A	-	-	-	587	-	-	-
Transient (< 150ms)	A	1210	1828	-	1828	-	-	-
Option 81	A	-	-	-	943	-	-	-
Transient (< 150ms)	A	-	-	-	2158	-	-	-
Cosine phi								
Nominal		0,70	0,80	0,81	0,80	0,81	0,81	0,83
Maximum (2)		0,89	0,89	0,89	0,89	0,89	0,89	0,89
Total harmonic distortion (2)	%	Closed to 0% (negligible)						
Maximum power input (3)								
Circuit A	kW	137	203	312	203	312	312	301
Circuit B	kW	-	-	-	203	312	312	301
Option 81	kW	-	-	-	406	624	624	602
Maximum current drawn (Un) (3)								
Circuit A	A	222	330	506	330	506	506	488
Circuit B	A	-	-	-	330	506	506	488
Option 81	A	-	-	-	660	1012	1012	976
Maximum current drawn (Un -10%) (2)								
Circuit A	A	240	356	546	356	546	546	527
Circuit B	A	-	-	-	356	546	546	527
Option 81	A	-	-	-	712	1092	1092	1054

61XWHHZE	Model	3	5	7	10	14	15	17
Maximum start-up current - Standard unit (1)								
Circuit A	A	1210	1828	1919	1828	-	1919	-
Circuit B	A	-	-	-	1828	-	1919	-
Option 81	A	-	-	-	2188	-	-	-
Maximum start-up current - Star/delta start option (2)								
Circuit A	A	388	587	-	587	-	-	-
Circuit B	A	-	-	-	587	-	-	-
Transient (< 150ms)	A	1210	1828	-	1828	-	-	-
Option 81	A	-	-	-	947	-	-	-
Transient (< 150ms)	A	-	-	-	2188	-	-	-
Maximum power input (3)								
Circuit A	kW	148	220	334	222	-	334	-
Circuit B	kW	-	-	-	222	-	334	-
Option 81	kW	-	-	-	444	-	-	-
Maximum current drawn (Un) (3)								
Circuit A	A	241	360	543	360	-	543	-
Circuit B	A	-	-	-	360	-	543	-
Option 81	A	-	-	-	720	-	-	-
Maximum current drawn (Un -10%) (2)								
Circuit A	A	260	389	586	389	-	586	-
Circuit B	A	-	-	-	389	-	586	-
Option 81	A	-	-	-	778	-	-	-

(1) Instantaneous start-up current for delta connection (maximum operating current of the smallest compressor(s) + locked rotor current or reduced start-up current of the largest compressor).
(2) Both Max start-up current and transient peak to be considered for installation
(3) Values obtained at operation with maximum unit power input.
(4) Values obtained at operation with maximum unit power input. Values given on the unit name plate.

4.3 - Short-circuit stability current for all units

Short-circuit stability current for all units using the TN system (earthing system type): 50 kA (conditional system short-circuit current Icc/Icf at the unit connection point as rms value).

The unit is equipped with protection fuses located in the control box immediately downstream from the unit connection point.

4.4 - Compressor electrical data

	61XWHL / 61XWH-		61XWHH					
Compressor	**I Max (A)(1)**	**MHA (A)**	**I Max (A)(1)**	**MHA (A)**	**LRYA (A)**	**LRDA (A)**	**Cosine phi nom.**	**Cosine phi max.(1)**
06TTA301	222	240	241	260	388	1210	0,70	0,89
06TUA483	330	356	360	389	587	1828	0,80	0,89
06TVA753	506	546	543	586	-	1919	0,81	0,89
06TVA819	488	527	-	-	-	1919	0,83	0,89

(1) Value at maximum capacity and nominal voltage (400 V).

Legend

MHA - Maximum compressor operating current, limited by the unit (current given for maximum capacity at 360 V)

LRYA - Locked rotor current for star connection (connection during compressor start-up with opt 25A)

LRDA - Locked rotor current for delta connection

4.5 - Compressor usage per circuit (A, B)

Model	**3**	**5**	**7**	**10**	**14**	**15**	**17**
06TTA301	A	-	-	-	-	-	-
06TUA483	-	A	-	AB	-	-	-
06TVA753	-	-	A	-	AB	AB	-
06TVA819	-	-	-	-	-	-	AB

Electrical data notes and operating conditions, 61XWH units

- 61XWH 3 to 7 units have a single power connection point located immediately upstream of the main disconnect switch.
  61XWH 10 to 17 units have two connection points located immediately upstream of the main disconnect switches.
- The control box includes the following standard features:
  - One main disconnect switch per circuit
  - Starter and motor protection devices for each compressor
  - Anti-short cycle protection devices
  - Control devices
- Field connections: All connections to the system and the electrical installations must be in full accordance with all applicable codes.
- The unit is designed and built to ensure conformance with local codes. The recommendations of European standard EN 60204-1 (corresponds to IEC 60204-1) (machine safety - electrical machine components - part 1: general regulations) are specifically taken into account, when designing the electrical equipment.
- Compliance of the installation to 1999/92/CE directive on minimum requirements for improving the safety and health protection of workers potentially at risk from explosive atmospheres : The electrical equipment is not designed for compliance to 2014/34/EU directive for equipment and protective systems intended for use in potentially explosive atmospheres. The compliance of the building installation with article 3 Prevention of and protection against explosions shall be achieved by all necessary measures in the installation for prevention of the formation of explosive atmospheres

Notes:

- Generally the recommendations of IEC 60364 are accepted as compliance with the requirements of the installation directives. Conformance with EN 60204-1 is the best means of ensuring compliance with the Machines Directive.
- Annex B of EN 60204 1 describes the electrical characteristics used for the operation of the machines.

The operating environment for the units is specified below:

1. Environment(1) as classified in EN 60721 (corresponds to IEC 60721):
   - Indoor installation
   - Ambient temperature range: minimum temperature +5°C to +42°C, class AA4
   - Altitude: lower than or equal to 2000 m
   - Presence of water: class AD2 (possibility of water droplets)
   - Presence of hard solids, class 4S2 (no significant dust present)
   - Presence of corrosive and polluting substances, class 4C2 (negligible)
2. Power supply frequency variation: ± 2 Hz.
3. The neutral (N) line must not be connected directly to the unit (if necessary use a transformer).
4. Overcurrent protection of the power supply conductors is not provided with the unit.
5. The factory installed disconnect switch(es)/circuit breaker(s) is (are) of a type suitable for power interruption in accordance with EN 60947-3 (corresponds to IEC 60947-3).
6. The unit is designed for connection to TN networks (IEC 60364). For IT networks the earth connection must not be at the network earth. Provide a local earth, consult competent local organisations to complete the electrical installation.

NOTE: If particular aspects of an actual installation do not conform to the conditions described above, or if there are other conditions which should be considered, always contact your local Carrier representative.

(1) The required protection level for this class is IPX1B (according to reference standard IEC 60529). The unit fulfils this protection condition. In general the casings fulfil class IPX3B

5 - ELECTRICAL CONNECTION

Please refer to the certified dimensional drawings, supplied with the unit.

5.1 - Power supply

The power supply must conform to the specification on the unit nameplate. The supply voltage must be within the range specified in the electrical data table. For connection details refer to the wiring diagrams.

WARNING: Operation of the unit with an improper supply voltage or excessive phase imbalance constitutes abuse which will invalidate the Carrier warranty. If the phase imbalance exceeds 2% for voltage, or 10% for current, contact your local electricity supplier at once and ensure that the unit is not switched on until corrective measures have been taken.

5.2 - Voltage phase imbalance (%)

$$\frac{100 \times \text{max. deviation from average voltage}}{\text{Average voltage}}$$

Example:

On a 400 V - 3 ph - 50 Hz supply, the individual phase voltages were measured to be:

AB = 406 V; BC = 399 V; AC = 394 V

Average voltage = (406 + 399 + 394)/3 = 1199/3 = 399.7 say 400 V

Calculate the maximum deviation from the 400 V average:

The maximum deviation from the average is 6 V. The greatest percentage deviation is: 100 x 6/400 = 1.5 %. This is less than the permissible 2% and is therefore acceptable.

(AB)	= 406 - 400	= 6
(BC)	= 400 - 399	= 1
(A)	= 400 - 394	= 6

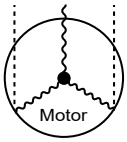

5.3 - Power connection/disconnect switch

Units connection points

61XWH 3 to 7: 1 per unit

61XWH 10 to 17: 1 for circuit A / 1 for circuit B

5.4 - Recommended wire sections

Wire sizing is the responsibility of the installer, and depends on the characteristics and regulations applicable to each installation site. The following is only to be used as a guideline, and does not make in any way liable. After wire sizing has been completed, using the certified dimensional drawing, the installer must ensure easy connection and define any modifications necessary on site.

The connections provided as standard for the field-supplied power entry cables to the general disconnect/isolator switch are designed for the number and type of wires, listed in the second column of the table on the next page.

The calculations for favourable and unfavourable cases are based on the maximum current for each unit (see electrical data tables). The design uses the standardised installation methods in accordance with IEC 60364: multiconductor PVC (70°C) or XLPE (90°C) insulated cables with copper core; arrangement to comply with table 52c of the above standard. The maximum temperature is 42°C. The given maximum length is calculated to limit the voltage drop to 5%.

Table of minimum and maximum connectable wire sections.

	Connectable wire section(1)	Calculation favourable case: Perforated horizontal conduit (standardised routing No. 15) XLPE insulated cable			Calculation unfavourable case: Closed conduit (standardised routing No. 41) PVC insulated cable, if possible		
61XWHLZE / 61XWH-ZE Circuit(s) A(/B)	**Section mm² (per phase)**	**Section(2) mm² (per phase)**	**Max.length m**	**Cable type**	**Section(2) mm² (per phase)**	**Max. length m**	**Cable type(3)**
Model							
3	1x 240	1 x 95	217	XLPE Cu	1 x 185	390	PVC Cu
5	2 x 240	1 x 185	243	XLPE Cu	2 x 185	418	PVC Cu
7	2 x 240	2 x 120	211	XLPE Cu	2 x 185	294	XLPE Cu
10	2 x 240/2 x 240	1 x 240/1 x 240	251/251	XLPE Cu	2 x 240/2 x 240	366/366	PVC Cu
14	2 x 300/2 x 300	2 x 150/2 x 150	203/203	XLPE Cu	2 x 300/2 x 300	294/294	XLPE Cu
15	2 x 300/2 x 300	2 x 150/2 x 150	294/294	XLPE Cu	2 x 300/2 x 300	294/294	XLPE Cu
17	2 x 300/2 x 300	2 x 150/2 x 150	211/211	XLPE Cu	2 x 300/2 x 300	305/305	XLPE Cu
Model with option 81							
10	4 x 240	2 x 240	251	XLPE Cu	4 x 240	377	PVC Cu
14	4 x 300	4 x 150	203	XLPE Cu	4 x 300	294	XLPE Cu
15	4 x 300	4 x 150	294	XLPE Cu	4 x 300	294	XLPE Cu
17	4 x 300	4 x 150	211	XLPE Cu	4 x 300	305	XLPE Cu
61XWHHZE							
Model							
3	1 x 240	1 x 95	200	XLPE Cu	1 x 185	358	PVC Cu
5	2 x 240	1 x 240	277	XLPE Cu	2 x 185	386	PVC Cu
7	2 x 240	2 x 150	234	XLPE Cu	2 x 240	328	XLPE Cu
10	2 x 240/2 x 240	1 x 240/1 x 240	231/231	XLPE Cu	2 x 185/2 x 185	302	XLPE Cu
15	2 x 240/2 x 240	2 x 185/2 x 185	215/215	XLPE Cu	Not compatible		
Model with option 81							
10	4 x 240	2 x 185	215	XLPE Cu	4 x 185	302	XLPE Cu

(1) Connection capacities actually available for each machine, defined according to the connection terminal size, the control box access opening size and the available space inside the control box.
(2) Selection simultation result considering the hypothesis indicated.
(3) If the maximum calculated section is for an XLPE cable type or specified “not compatible”, this means that it exists a risk to exceed the real connection capacity available. Special attention must be given to the selection.

Note: The currents considered are given for a machine equipped with a hydronic kit operating at maximum current.

5.5 - Power cable entry

The power cables can enter the unit control box from above the unit. A removable aluminium plate on the upper part of the control box face allows introduction of the cables. Refer to the certified dimensional drawing for the unit.

The plate fixing on the electrical box as well as the cable passage through the plate have to be tight.

If not, the differential pressure sensor should not detect the electrical box fan operating. This will prevent the unit from starting.

5.6 - Field control wiring

IMPORTANT: Field connection of interface circuits may lead to safety risks: any control box modification must maintain equipment conformity with local regulations. Precautions must be taken to prevent accidental electrical contact between circuits supplied by different sources:

The routing selection and/or conductor insulation characteristics must ensure dual electric insulation.

In case of accidental disconnection, conductor fixing between different conductors and/or in the control box prevents any contact between the conductor ends and an active energised part.

Refer to the SmartVu™ Control manual and the certified wiring diagram supplied with the unit for the field control wiring of the following features:

- Customer interlock
- Remote on/off switch
- Demand limit external switch
- Remote dual set point
- Alarm, alert and operation report
- Evaporator pump control
- Heat reclaim condenser pump control (option)
- Hot water valve control (option)
- Various interlocks on the Energy Management Module (EMM) board (accessory or option)

CCN bus connection

- The permanent connection to the system CCN bus is made at the terminal provided for this purpose inside the control box.
- The connection of the CCN service tool is possible at a socket under the control box, accessible from outside.

All panel feedthrough of control cables have to be tight to allow electrical box fan operating detection.

5.7 - 24 V power reserve for the user

Control circuit reserve:

After all required options have been connected, the TC transformer includes a power reserve that can be used for the field control wiring: 2 A (24 V a.c.) or 48 VA.

6.1 - Operating limits

6.1.1 - 61XWHLZE / 61XWH-ZE units

61XWHZ-E	Minimum	Maximum
Evaporator		
Entering temperature at start-up	-	Up to 35,0°C
Leaving temperature during operation	3,3°C(1)	Up to 25,0°C(4)
Condenser		
Entering temperature at start-up	13,0°C(2)	-
Leaving temperature during operation	35,0°C(2)	Up to 85,0°C(3)

(1) Use of antifreeze protection is required if the leaving temperature is below 3.3°C (61XWHLZE to -6°C).
(2) For lower condenser temperatures a water flow control valve must be used at the condenser (two or three-way valve). Please refer to option 152 to ensure the correct condensing temperature.
(3) Limited to 75°C for model 17
(4) Limited to 10.0°C for 61XWHLZE units

6.1.2 - 61XWHHZE units

Only models 3, 5, 7, 10, 15

61XWHHZE	Minimum	Maximum
Evaporator		
Entering temperature at start-up	-	Up to 60,0°C
Leaving temperature during operation	20,0°C	Up to 55,0°C
Condenser		
Entering temperature at start-up	13,0°C(1)	-
Leaving temperature during operation	35,0°C(1)	Up to 85°C

(1) For lower condenser temperatures a water flow control valve must be used at the condenser (two or three-way valve). Please refer to option 152 to ensure the correct condensing temperature.

Note: Ambient temperatures: During storage and transport (including by container) the minimum and maximum permissible temperatures are -20°C and 70°C.

6.2 - Minimum chilled water flow

The minimum chilled water flow is shown in the table in chapter 6.6.

If the system flow is less than the minimum unit flow rate, the evaporator flow can be recirculated, as shown in the diagram.

For minimum chiller flow rate

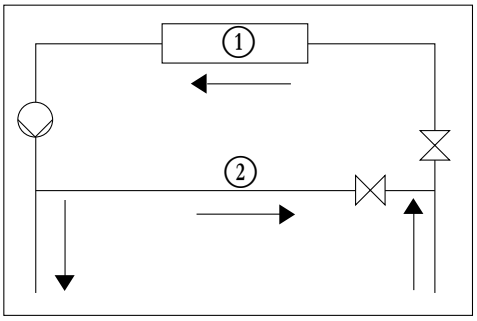

Legend
1 Evaporator
2 Recirculation

6.3 - Maximum chilled water flow

The maximum chilled water flow is limited by the permitted pressure drop in the evaporator. It is provided in the table in chapter 6.6.

Bypass the evaporator as shown in the diagram to obtain a lower evaporator flow rate.

For maximum chiller flow rate

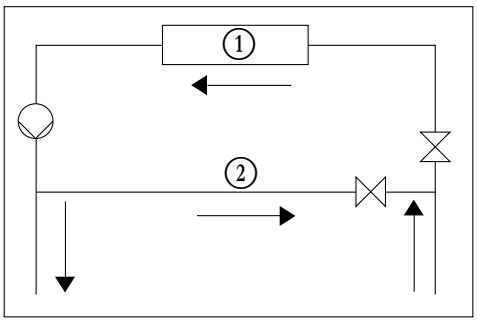

Legend
1 Evaporator
2 Recirculation

6.4 - Condenser water flow rate

The minimum and maximum condenser water flow rates are shown in the table in chapter 6.6.

6.5 - Standard and optional number of water passes

The unit is equipped of two passes on evaporator and on condenser.

61XWH							
Model	**3**	**5**	**7**	**10**	**14**	**15**	**17**
Evaporator							
Standard unit	2	2	2	2	2	2	2
Unit with option 100A	3	3	3	3	3	3	3
Unit with option 100C	1	1	1	1	1	1	1
Condenser							
Standard unit	2	2	2	2	2	2	2
Unit with option 102A	3	3	3	3	3	3	3
Unit with option 102C	1	1	1	1	1	1	1

6.6 - Evaporator and condenser water flow rates

Units 61XWH							
Model	**3**	**5**	**7**	**10**	**14**	**15**	**17**
Evaporator water flow rate, l/s							
Minimum	4	6	8	11	13	13	13
Maximum	39	57	76	84	116	116	116
Condenser water flow rate, l/s							
Minimum	4	6	8	12	18	14	14
Maximum	29	55	74	119	130	134	134

Notes :
- **Minimum evaporator flow rate based on a water velocity of 0,3 m/s.**
- **Minimum condenser flow rate based on a water velocity of 0,3 m/s.**
- **Maximum flow rate based on a pressure drop of 120 kPa.**
- **These values are given for standard units.**

6.7 - Variable flow evaporator

Variable evaporator flow can be used. The controlled flow rate must be higher than the minimum flow given in the table of permissible flow rates and must not vary by more than 10% per minute.

If the flow rate changes more rapidly, the system should contain a minimum of 6.5 liters of water per kW instead of 3.25 l/kW.

6.8 - System minimum water volume

Whichever the system, the water loop minimum volume is given by the formula:

Volume = Cap (kW) x N litres

Application	N
Normal air conditioning	6,5
Process type cooling	13

Where Cap is the nominal system heating capacity (kW) at the nominal operating conditions of the installation.

This volume is necessary for stable operation. It is often necessary to add a buffer water tank to the circuit in order to achieve the required volume. It is recommended to thermally insulate the entire water loop. The tank must itself be internally baffled in order to ensure proper mixing of the liquid (water or brine). Refer to the examples below.

Conection to buffer tank

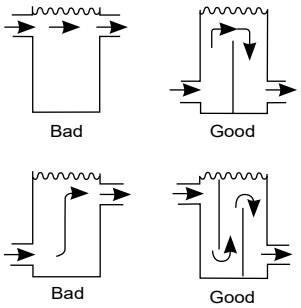

6.9 - Evaporator pressure drop curves

Units with two evaporator passes (standard):

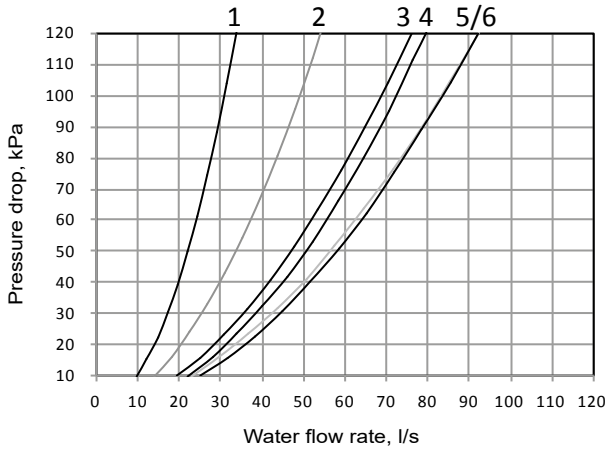

Legend

1	Model 3	4	Model 10
2	Model 5	5	Model 14
3	Model 7	6	Model 15, 17

Units with three evaporator passes (option 100A):

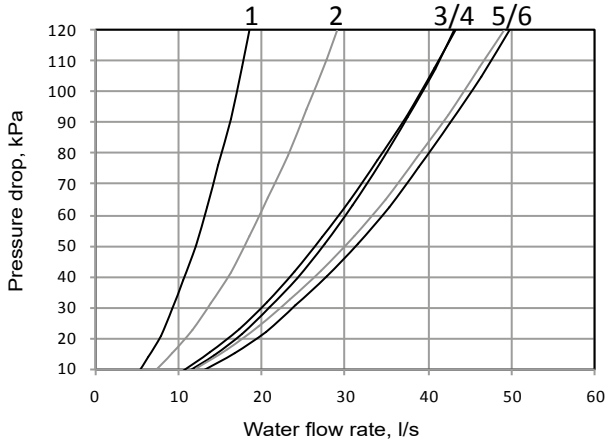

Legend

1	Model 3	4	Model 10
2	Model 5	5	Model 14
3	Model 7	6	Model 15, 17

Units with one evaporator pass (option 100C):

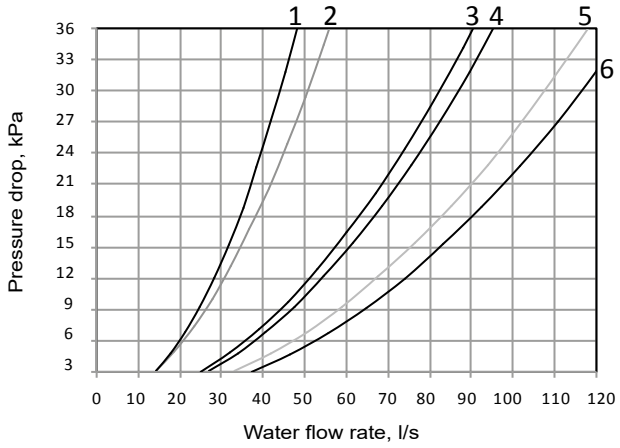

Legend

1	Model 3	4	Model 10
2	Model 5	5	Model 14
3	Model 7	6	Model 15, 17

6.10 - Condenser pressure drop curves

Units with two condenser passes (standard):

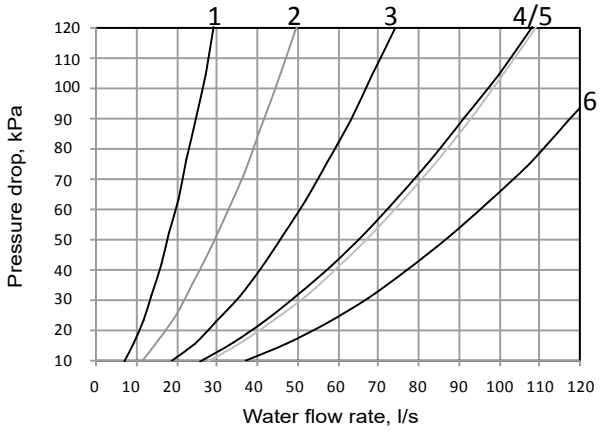

Legend

1	Model 3	4	Model 10
2	Model 5	5	Model 14
3	Model 7	6	Model 15, 17

Units with three condenser passes (option 102A):

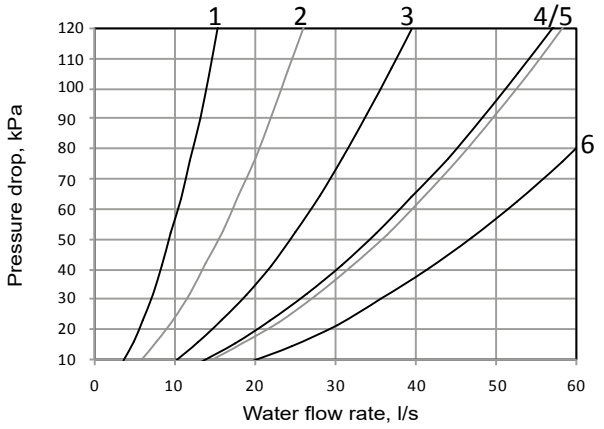

Legend

1	Model 3	4	Model 10
2	Model 5	5	Model 14
3	Model 7	6	Model 15, 17

Units with one condenser pass (option 102C):

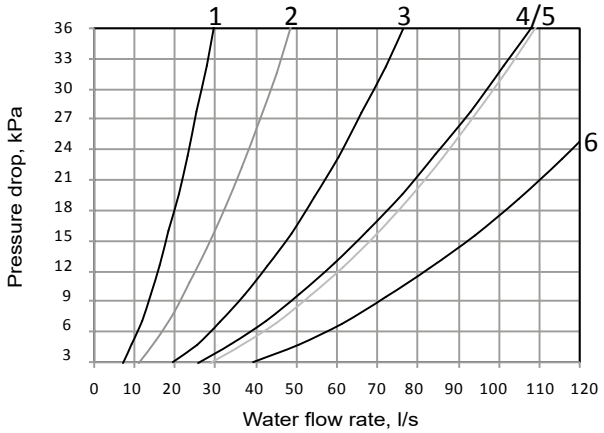

Legend

1	Model 3	4	Model 10
2	Model 5	5	Model 14
3	Model 7	6	Model 15, 17

ATTENTION: Before carrying out any water connections install the water box purge plugs (one plug per water box in the lower section supplied in the control box).

For size and position of the heat exchanger water inlet and outlet connections refer to the certified dimensional drawings supplied with the unit.

The water pipes must not transmit any radial or axial force to the heat exchangers nor any vibration.

The water supply must be analysed and appropriate filtering, treatment, control devices, isolation and bleed valves and circuits built in, to prevent corrosion, fouling and deterioration of the pump fittings. Consult either a water treatment specialist or appropriate literature on the subject.

7.1 - Operating precautions

The water circuit should be designed to have the least number of elbows and horizontal pipe runs at different levels. Below the main points to be checked for the connection:

- Comply with the water inlet and outlet connections shown on the unit.
- Install manual or automatic air purge valves at all high points in the circuit(s).
- Use a pressure reducer to maintain pressure in the circuit(s) and install a safety valve as well as an expansion tank.
- Install thermometers in both the entering and leaving water connections.
- Install drain connections at all low points to allow the whole circuit to be drained.
- Install stop valves, close to the entering and leaving water connections.
- Use flexible connections to reduce the transmission of vibrations.
- Insulate all pipework, after testing for leaks, both to reduce heat gains and to prevent condensation.
- Cover the insulation with a vapour barrier.

Where there are particles in the fluid that could foul the heat exchanger, a screen filter should be installed ahead of the pump. The mesh size of the filter must be 1.2 mm.

Before the system start-up verify that the water circuits are connected to the appropriate heat exchangers (e.g. no reversal between evaporator and condenser). Do not introduce any significant static or dynamic pressure into the heat exchange circuit (with regard to the design operating pressures). Before any start-up verify that the heat exchange fluid is compatible with the materials and the water circuit coating. The use of different metals on hydraulic piping could generate eletrolytic pairs and consequently corrosion. It could be needed to add sacrificial anodes. In case additives or other fluids than those recommended by Carrier are used, ensure that the fluids are not considered as a gas, and that they belong to class 2, as defined in directive 97/23/EC.

Carrier recommendations on heat exchange fluids:

- No NH_4^+ ammonium ions in the water, they are very detrimental for copper. This is one of the most important factors for the operating life of copper piping. A content of several tenths of mg/l will badly corrode the copper over time.
- Cl^- Chloride ions are detrimental for copper with a risk of perforations by corrosion by puncture. If possible keep below 125 mg/l.
- SO_4^{2-} sulphate ions can cause perforating corrosion, if their content is above 30 mg/l.
- No fluoride ions (<0.1 mg/l).
- No Fe^{2+} and Fe^{3+} ions with non negligible levels of dissolved oxygen must be present. Dissolved iron < 5 mg/l with dissolved oxygen < 5 mg/l.
- Dissolved silicon: silicon is an acid element of water and can also lead to corrosion risks. Content < 1 mg/l.
- Water hardness: > 0.5 mmol/l. Values between 1 and 2.5 can be recommended. This will facilitate scale deposit that can limit corrosion of copper. Values that are too high can cause piping blockage over time. A total alkalimetric titre (TAC) below 100 mg/l is desirable.
- Dissolved oxygen: Any sudden change in water oxygenation conditions must be avoided. It is as detrimental to deoxygenate the water by mixing it with inert gas as it is to over-oxygenate it by mixing it with pure oxygen. The disturbance of the oxygenation conditions encourages destabilisation of copper hydroxides and enlargement of particles.
- Electric conductivity 10-600µS/cm.
- pH: Ideal case pH neutral at 20-25°C 7 < pH < 8

When the water circuit must be emptied for longer than one month or immediately if the water does not comply with the above description, the circuit must be either totally dried or placed under 0.5 bar maximum nitrogen charge. This is done to avoid any damage of the exchanger copper tubes with corrosion by differential aeration. In case of nitrogen charge, the circuit must be equipped with relief valves to avoid overpressure due to refrigerant leakage. Charging and removing heat exchange fluids should be done with devices that must be included on the water circuit by the installer. Never use the unit heat exchangers to add heat exchange fluid.

CAUTION: Filling, completing and draining the water circuit charge must be done by qualified personnel, using the air purges and materials that are suitable for the products.

Charging and removing heat exchange fluids should be done with devices that must be included on the water circuit by the installer. Never use the unit heat exchangers to add heat exchange fluid.

7.2 - Water connections

The water connections are Victaulic type connections. The inlet and outlet connection diameters are identical.

Inlet/outlet diameters

61XWH								
Model		**3**	**5**	**7**	**10**	**14**	**15**	**17**
Evaporator								
Standard unit								
Nominal diameter	in	5	6	8	8	8	8	8
Actual outside diameter	mm	141,3	168,3	219,1	219,1	219,1	219,1	219,1
Unit with option 100A								
Nominal diameter	in	4	5	6	6	6	6	6
Actual outside diameter	mm	114,3	141,3	168,3	168,3	168,3	168,3	168,3
Unit with option 100C								
Nominal diameter	in	5	6	8	8	8	8	8
Actual outside diameter	mm	141,3	168,3	219,1	219,1	219,1	219,1	219,1
Condenser								
Standard unit								
Nominal diameter	in	5	6	8	8	8	8	8
Actual outside diameter	mm	141,3	168,3	219,1	219,1	219,1	219,1	219,1
Unit with option 102A								
Nominal diameter	in	4	5	6	6	6	8	8
Actual outside diameter	mm	114,3	141,3	168,3	168,3	168,3	219,1	219,1
Unit with option 102C								
Nominal diameter	in	6	8	8	8	8	8	8
Actual outside diameter	mm	168,3	219,1	219,1	219,1	219,1	219,1	219,1

7.3 - Flow control

Evaporator flow switch and chilled water pump interlock

IMPORTANT: The unit water flow switch must be energised, and the chilled water pump interlock must be connected. Failure to follow this instruction will void the Carrier guarantee.

The water flow switch is installed on the evaporator water inlet and adjusted by the control. If adjustment is necessary, it must be carried out by qualified personnel trained by Carrier Service.

Terminals 34 and 35 are provided for field installation of the chilled water pump interlock (auxiliary contact for pump operation to be wired on site).

7.4 - Evaporator and condenser water box bolt tightening

The evaporator (and condenser) are of the shell and tube type with removable water boxes to facilitate cleaning. Re-tightening or tightening must be done in accordance with the illustration in the example below.

NOTE: Before this operation we recommend draining the circuit and disconnecting the pipes to be sure that the bolts are correctly and uniformly tightened

Water box tightening sequence

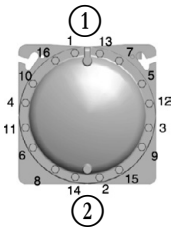

Legende

1. Sequence 1: 1 2 3 4
   Sequence 2: 5 6 7 8
   Sequence 3: 9 10 11 12
   Sequence 4: 13 14 15 16
2. Tightening torque
   Bolt size M 16 - 171 - 210 Nm

7.5 - Operation of two units in Lead/Lag mode

The control of a Lead/Lag assembly is in the entering water and does not require any additional sensors (standard configuration). It can also be located in the leaving water. In this case two additional sensors must be added on the common piping.

All parameters, required for the Lead/Lag function must be configured using the MST_SLV menu.

All remote controls of the Lead/Lag assembly (start/ stop, set point, load shedding etc.) are controlled by the unit configured as Lead and must only be applied to the Lead unit.

Each unit controls its own water pump. If there is only one common pump, in cases with variable flow, isolation valves must be installed on each unit. They will be activated at the opening and closing by the control of each unit (in this case the valves are controlled using the dedicated water pump outputs). See the SmartVu™ control manual for a more detailled explanation.

61XWH with configuration: leaving water control

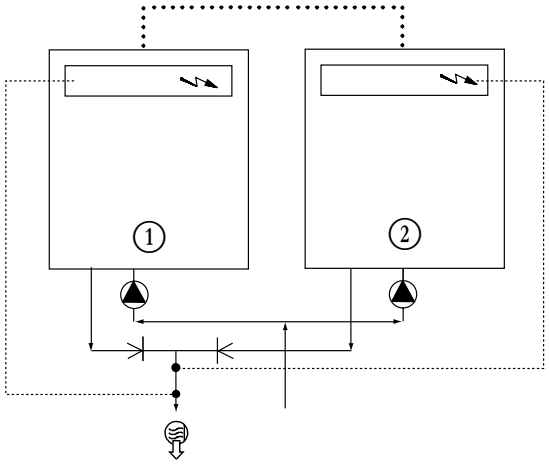

Legend

- (1) → Lead unit
- (1) → Lag unit
- Control boxes of the Lead and Lag units
- Water inlet
- Water outlet
- Water pumps for each unit (included as standard for units with hydraulic module)
- ● Additional sensors for leaving water control, to be connected to channel 1of the Lag boards of each Lead and Lag unit
- CCN communication bus
- Connection of two additional sensors

8 - OPERATING MODE FOR HEAT PUMP UNITS 61XWH

8.1 - Heating mode

Unlike in the cooling mode, the unit uses the heating setpoint in this configuration. The evaporator leaving water control (lowest setpoint taken into consideration) is still maintained to prevent operation at very low temperatures.

8.2 - Simultaneous operating use (Heating and cooling):

Sometimes the customer need to recover the cooling production in parrallel than the main use heating. In this case, a cooling setpoint could be prefered than standard heating setpoint.

9 - MAJOR SYSTEM COMPONENTS AND OPERATION DATA

9.1 - Direct-drive twin-screw compressor with variable capacity slide valve

The unit uses 06T geared twin-screw compressors equipped with a variable capacity slide valve for continuous control between 50% and 100% of full load.

9.1.1 - Oil filter

The 06T screw compressor has an independent oil filter.

9.1.2 - Refrigerant

The unit is a water source heat pump operating only with refrigerant R1234ze(E)

9.1.3 - Lubricant

The 06T screw compressor is approved for use with the following lubricant: CARRIER MATERIAL SPEC PP 47-38.

9.1.4 - Oil supply solenoid valve

An oil supply solenoid valve is installed on the oil return line as standard to isolate the compressor from oil flow when the compressor is not operating. The oil solenoid valve is field replaceable.

9.1.5 - Capacity control system

The 06T screw compressor has an unloading system that is standard on all compressors. This unloading system consists of slide valve that permits changing the length of the screw used for the refrigerant compression. This valve is controlled by the action of a piston controlled by two solenoid valves on the oil return line.

9.1.6 - Liquid injection line

The liquid injection line includes a shut-off valve and an electronic expansion valve. It permits to reach higher condensing temperature keeping limited discharge temperature.

9.2 - Pressure vessels

General

To remove an apparent discrepancy between TS maxi of components and of the high pressure side of the unit, refer to the note in 2.1.

Monitoring during operation, re-qualification, re-testing and re-testing dispensation:

- Follow the regulations on monitoring pressurised equipment.
- It is normally required that the user or operator sets up and maintains a monitoring and maintenance file.
- If no regulations exist or to complement regulations, follow the control programmes of EN 378.
- If they exist follow local professional recommendations.
- Regularly inspect the condition of the coating (paint) to detect blistering resulting from corrosion. To do this, check a non-insulated section of the container or the rust formation at the insulation joints.
- Regularly check for possible presence of impurities (e.g. silicon grains) in the heat exchange fluids. These impurities maybe the cause of the wear or corrosion by puncture.
- Filter the coolant and carry out internal inspections as described in EN 378.
- In case of re-testing please refer to the maximum operating pressure given on the unit nameplate.
- The reports of periodical checks by the user or operator must be included in the supervision and maintenance file.

Repair

Any repair or modification, including the replacement of moving parts:

- Must follow local regulations and be made by qualified operators and in accordance with qualified procedures, including changing the heat exchanger tubes.
- Must be made in accordance with the instructions of the original manufacturer. Repair and modification that necessitate permanent assembly (soldering, welding, expanding etc.) must be made using the correct procedures and by qualified operators.
- An indication of any modification or repair must be shown in the monitoring and maintenance file.

Recycling

The unit is wholly or partly recyclable. After use it contains refrigerant vapours and oil residue. It is coated by paint.

Operating life

The evaporator and oil separator are designed for:

- Prolonged storage of 15 years under nitrogen charge with a temperature difference of 20K per day.
- 452000 cycles (start-ups) with a maximum difference of 6 K between two neighbouring points in the vessel, based on 6 start-ups per hour over 15 years at a usage rate of 57%.

Corrosion allowances

Gas side: 0 mm

Heat exchange fluid side: 1 mm for tubular plates in lightly alloyed steels, 0 mm for stainless steel plates or plates with copper-nickel or stainless steel protection.

9.2.1 - Evaporator

61XWH heat pumps use a flooded multi-tube evaporator. The water circulates in the tubes and the refrigerant is on the outside in the shell. One vessel is used to serve both refrigerant circuits. There is a center tube sheet which separates the two refrigerant circuits. The tubes are 3/4” diameter copper with an enhanced surface inside and out.

There is just one water circuit with two water passes (one pass with option 100C and three passes with option 100A, please refer to chapter 6.5).

The evaporator shell has a polyurethane foam thermal insulation and a water drain and purge.

It has been tested and stamped in accordance with the applicable pressure codes. The maximum standard relative operating pressure is 2100 kPa for the refrigerant side and 1000 kPa for the water-side. These pressures can be different depending on the code applied. The water connection of the heat exchanger is a Victaulic connection.

The products that may be added for thermal insulation of the containers during the water piping connection procedure must be chemically neutral in relation to the materials and coatings to which they are applied. This is also the case for the products originally supplied by Carrier.

9.2.2 - Condenser and oil separator

The 61XWH heat pumps uses a heat exchanger that is a combination condenser and oil separator. It is mounted below the evaporator. Discharge gas leaves the compressor and flows through an external muffler to the oil separator, which is the upper portion of the heat exchanger. It enters the top of the separator where oil is removed, and then flows to the bottom portion of the vessel, where gas is condensed and subcooled. One vessel is used to serve both refrigerant circuits. There is a center tube sheet which separates the two refrigerant circuits. The tubes are 3/4” or 1” diameter internally and externally finned copper tubes.

The oil, once separated from refrigerant, is flowing to an oil receiver (oil tank).The valve present on top of the tank must be closed while operating. During refrigerant recovery, vacuum or refrigerant charging, this valve can be connected via a flexible hose to the condenser service valve in order to avoid air or other incondensable substances trapping at the top of the oil receiver.

There is just one water circuit with two water passes (one pass with option 102C and three passes with option 102A, please refer to chapter 6.5).

It has been tested and stamped in accordance with applicable pressure codes. The maximum standard relative operating pressure is 3000 kPa for the refrigerant side and 1000 kPa for the water-side. These pressures can be different depending on the code applied. The water connection of the heat exchanger is a Victaulic connection.

9.2.3 - Economiser function (depending on model)

The economiser function includes a liquid line valve, a filter drier, two electronic expansion valves (EXVs), a plate heat exchanger as well as protection devices.

At the condenser outlet a part of the liquid is expanded via the secondary EXV in one of the heat exchanger circuits and then returns as a gas. This expansion permits increase of the liquid sub-cooling of the rest of the flow that penetrates the evaporator via the principal EXV. This permits increasing the cooling capacity of the system as well as its efficiency.

9.3 - Detection of the air pressurization of the electrical cabinet

The electrical cabinet is equipped (except units with option 330) with a function for detection of its air pressurization. It is made of a differential pressure sensor that provides a signal to a voltage relay. This function insures that the cabinet is always pressurized above 5Pa in order to avoid any ingress of refrigerant inside the cabinet. It is aimed at stopping the unit or preventing it from starting if the pressure differential between the inside and the outside of the cabinet is lower than the threshold value. This can happen:

- If the cooling fan of the electrical box fails or if the inlet or exhaust openings are getting fouled
- If the ducting providing fresh air to the cabinet (refer to §1 p6) is too much resistant to air flow or fouled
- If the cabinet is not tight enough (especially mind the power input plate and cable glands)

9.4 - Electronic expansion valve (EXV)

The EXV is equipped with a stepper motor (2785 to 3690 steps, depending on the model) that is controlled via the EXV board.

The EXV is also equipped with a sightglass that permits verification of the mechanism movement and the presence of the liquid gasket.

For maintenance instruction on expansion valves please refer to paragraph 12.8.

9.5 - Moisture indicator

Located on the EXV, permits control of the unit charge and indicates moisture in the circuit. The presence of bubbles in the sight-glass indicates an insufficient charge or non-condensables in the system. The presence of moisture changes the colour of the indicator paper in the sight-glass.

9.6 - Filter drier

The role of the filter drier is to keep the circuit clean and moisture free. The moisture indicator shows, when it is necessary to change the element. A difference in temperature between the filter inlet and outlet shows that the element is dirty.

9.7 - Sensors

The unit uses thermistors to measure the temperature, and pressure transducers to control and regulate system operation (see SmartVu™ Control IOM for a more detailed explanation).

9.8 - SRMCR high-pressure safety circuit

9.8.1 - General description

The device is equipped with a high pressure safety loop, also known as safety related measurement control and regulation system (SRMCR), consisting of:

- 2 high pressure switches (HPS) with manual reset located at the outlet of each compressor:
  - A pressure switch type PZH
  - A pressure switch type PZHH
- A control relay on the compressor board
- 2 compressor main contactors

See the wiring diagram and bill of material of the unit for details of identification and references.

This safety loop is designed according to EN 61508 for:

SIL level (Safety Integrity): 2

Demand mode: high and low

Mission Time: 20 years.

Periodic test: The safety loop operation must be tested at least once a year to maintain its integrity.

9.8.2 - Function description and reset:

Diagram below describes the description of operation: refer to the machine documentation to obtain the detailed wiring diagram

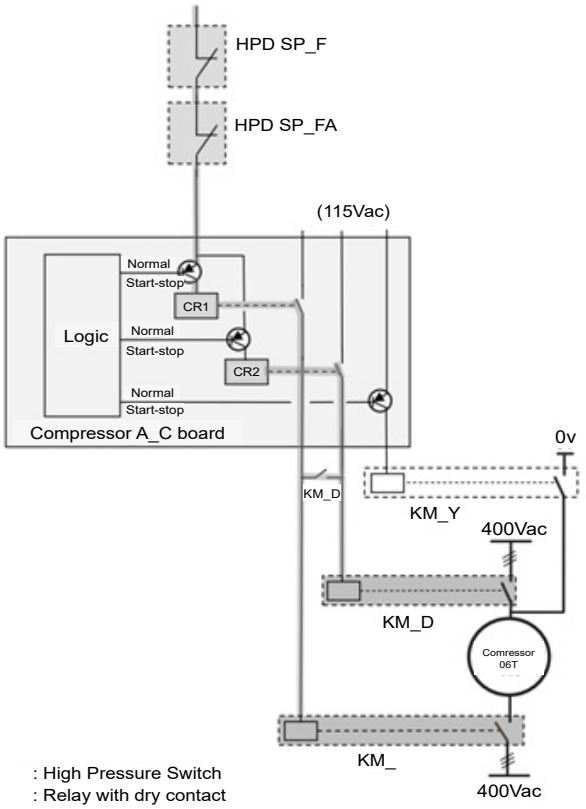

HPS	: High Pressure Switch
CR	: Relay with dry contact
KM	: Power contactors
-	: Circuit designation (1 or 2)
	: Circuit designation (1 or 2)

The HPS switches are wired in series to the control relays of the A_C board which controls the KM and KM-D main contactors. Both switches are closed during continuous operation of the compressor. When one of the HPS switches opens, the control relay interrupts the supply voltage of the KM-and KM-D contactor coil: the main contactor opens, which causes the compressor to lose power and stop .

The operation of this safety loop is electromechanical: it is not based on software or an electronic component.

9.8.3 - Restart after high pressure detection

After detecting the overpressure, it is necessary to manually reset the switched HPS (s). Using a dull tool with a diameter of less than 6 mm if the PZHH HPS is deactivated.

9.8.4 - Checks in case of apparent failure of the safety accessory.

If the operating pressure of the unit appears to have been exceeded (for example: after opening of the relief valves), the unit must be stopped immediately. The unit and the safety loop must pass all periodic checks before any possible restart.

If the test reveals any malfunctions that could have led to exceed the maximum allowable pressure (PS) of the device, a complete check of all pressure equipment must be performed to verify their mechanical integrity.

10 - OPTIONS AND ACCESSORIES

Options	No.	Description	Advantages	Use for 61XWH range
Star / delta start	25A	Star / Delta start on each compressor	Reduced start-up current	3-5, 10
Lead/Lag operation	58	Unit equipped with supplementary water outlet temperature sensor kit to be field-installed allowing Lead/Lag operation of two units connected in parallel	Optimised operation of two units connected in parrallele operation with operating time equalisation	3-17
Single power connection point	81	Unit power connection via one main supply connection	Quick and easy installation	61XWHLZE / 61XWH-ZE 10-17, 61XWHHZE 10
No disconnect switch	82A	Unit without disconnect switch, but with short-circuit protection device	Permits an external electrical disconnect system for the unit (field-supplied), while ensuring unit short circuit protection	3-17
Evap. single pump power/control circuit	84	Unit equipped with an electrical power and control circuit for one pump evaporator side	Quick and easy installation: the control of fixed speed pumps is embedded in the unit control	3-10 Not available for 61XWHHZE
Evap. dual pumps power/control circuit	84D	Unit equipped with an electrical power and control circuit for two pumps evaporator side	Quick and easy installation: the control of fixed speed pumps is embedded in the unit control	3-10 Not available for 61XWHHZE
Cond. single pump power/control circuit	84R	Unit equipped with an electrical power and control circuit for one pump condenser side	Quick and easy installation: the control of fixed speed pumps is embedded in the unit control	3-10 Not available for 61XWHHZE
Evaporator with one pass more	100A	Evaporator with one pass more on the water side	Optimise chiller operation when the chilled water circuit is designed with low waterflows (high delta T evaporator inlet/oulet)	3-17
Evaporator with one pass less	100C	Evaporator with one pass on the water side. Evaporator inlet and outlet on opposite sides.	Easy to install, depending on site. Reduced pressure drops	3-17
Condenser with one pass more	102A	Condenser with three passes on the water side. Condenser inlet and outlet on opposite sides.	Adapted to sites where larger temperature differences and smaller water flow rates are required	3-17
Condenser with one pass less	102C	Condenser with one pass on the water side. Condenser inlet and outlet on opposite sides.	Easy to install, depending on site. Reduced pressure drops	3-17
21 bar evaporator	104	Reinforced evaporator for extension of the maximum water-side service pressure to 21 bar (standard 10 bar)	Covers applications with a high water column evaporator side (typically high buildings)	3-17
21 bar condenser	104A	Reinforced condenser for extension of the maximum water-side service pressure to 21 bar (standard 10 bar)	Covers applications with a high water column condenser side (typically high buildings)	3-17
Reversed evaporator water connections	107	Evaporator with reversed water inlet/outlet	Easy installation on sites with specific requirements	3-17
Reversed condenser water connections	107A	Condenser with reversed water inlet/outlet	Easy installation on sites with specific requirements	3-17
J-Bus gateway	148B	Two-directional communication board complying with JBus protocol	Connects the unit by communication bus to a building management system	3-17
Lon gateway	148D	Two-directional communication board complying with Lon Talk protocol	Connects the unit by communication bus to a building management system	3-17
Bacnet over IP	149	Two-directional high-speed communication using BACnet protocol over Ethernet network (IP)	Easy and high-speed connection by ethernet line to a building management system. Allows access to multiple unit parameters	3-17
Control for low cond. temperature	152	Output signal (0-10 V) to control the condenser water inlet valve	Simple installation: for applications with cold water at condenser inlet (ex. ground-source, groundwater-source, superficial water-source applications) the signal permits to control a 2 or 3-way valve to maintain condenser water temperature (and so condensing pressure) at acceptable values	3-17
Energy Management Module	156	EMM Control board with additional inputs/outputs. See Energy Management Module option chapter	Extended remote control capabilities (Set-point reset, ice storage end, demand limits, boiler on/off command...)	3-17
Compliance with Swiss regulations	197	Additional tests on the water heat exchangers: supply (additional of PED documents) supplementary certificates and test certifications	Conformance with Swiss regulations	3-17

10 - OPTIES EN ACCESSOIRES

Options	No.	Description	Advantages	Use for 61XWH range
Low noise level	257	Evaporator sound insulation	3 dB(A) quiter than standard unit	5-17
Welded evaporator connection kit	266	Victaulic piping connections with welded joints	Easy installation	3-17
Welded condenser water connection kit	267	Victaulic piping connections with welded joints	Easy installation	3-17
Flanged evaporator water connection kit	268	Victaulic piping connections with flanged joints	Easy installation	3-17
Flanged condenser water connection kit	269	Victaulic piping connections with flanged joints	Easy installation	3-17
Conformance with Moroccan regulations	327	Specific regulatory documentation	Conformance with Moroccan regulations	3-17

11 - STANDARD MAINTENANCE

Air conditioning equipment must be maintained by professional technicians, whilst routine checks can be carried out locally by specialised technicians.

Simple preventive maintenance will allow you to get the best performance from your HVAC unit:

- Improved cooling performance
- Reduced power consumption
- Prevention of accidental component failure
- Prevention of major time consuming and costly interventions
- Protection of the environment

There are five maintenance levels for HVAC units, as defined by the AFNOR X60-010 standard.

11.1 - Level 1 maintenance

See note below.

Simple procedure can be carried out by the user:

- Visual inspection for oil traces (sign of a refrigerant leak)
- Check for removed protection devices, and badly closed doors/covers
- Check the unit alarm report when the unit does not work (see report in the SmartVu™ control manual).

General visual inspection for any signs of deterioration.

11.2 - Level 2 maintenance

This level requires specific know-how in the electrical, hydronic and mechanical fields. It is possible that these skills are available locally: existence of a maintenance service, industrial site, specialised subcontractor.

In these cases, the following maintenance operations are recommended.

Carry out all level 1 operations, then:

- At least once a year tighten the power circuit electrical connections (see tightening torques table).
- Check and re-tighten all control/command connections, if required (see tightening torques table).
- Check the differential switches for correct operation every 6 months.
- Remove the dust and clean the interior of the control boxes, if required. Check the filter condition.
- Check the good operation of the air pressurization detection function of the electrical cabinet.
- Check the presence and the condition of the electrical protection devices.
- Replace the fuses every 3 years or every 15000 hours (age-hardening).
- Replace the control box fan every five years
- Check that control box ventilation system is not obstructed: this shall include the fresh air duct as well as the air filters located on the control box and at the entry of the duct.
- Check the water connections.
- Purge the water circuit (see chapter 8 “Water connections”)
- Clean the water filter (see chapter 8 “Water connections”).
- Check the unit operating parameters and compare them with previous values.
- Keep and maintain a maintenance sheet, attached to each HVAC unit.

All these operations require strict observation of adequate safety measures: individual protection garments, compliance with all industry regulations, compliance with applicable local regulations and using common sense.

11.3 - Level 3 (or higher) maintenance

The maintenance at this level requires specific skills/ approval/ tools and know-how and only the manufacturer, his representative or authorised agent are permitted to carry out these operations. These maintenance operations concern for example:

- A major component replacement (compressor, evaporator)
- Any intervention on the refrigerant circuit (handling refrigerant)
- Changing of parameters set at the factory (application change)
- Removal or dismantling of the HVAC unit
- Any intervention due to a missed established maintenance operation
- Any intervention covered by the warranty

NOTE: Any deviation or non-observation of these maintenance criteria will render the guarantee conditions for the HVAC unit null and void, and the manufacturer, Carrier France, will no longer be held responsible

11.4 - Tightening of the electrical connections

11.4.1 - Tightening torques for the main electrical connections

Screw type	Designation in the unit	Torque value, N•m
Screw on bus bar, customer connection		
M10	L1/L2/L3	40
M12	L1/L2/L3	70
Soldered screw PE, customer connection (M12)	PE	70
Screw on fused disconnect inlet zones		
Fused disconnect 1034061/M10, customer connection L1/L2/L3	L1/L2/L3	40
Fused disconnect 1034061/M12, Y/D outlet	QS10-	70
Fused disconnect 3KL7141	QS10-	70
Fused disconnect 3KL7151	QS10-	70
Tunnel terminal screw, compressor contactor		
Contactor 3RT104-	KM-	5
Contactor 3RT105-	KM-	11
Contactor 3RT106-	KM-	21
Tunnel terminal screw, current transformer		
Size 2 (3RB2966-)	TI-	11
Compressor earth terminal in the power wiring control box		
M12	Gnd	70
Compressor phase connection terminals		25
M12	1/2/3/4/5/6 on EC-	23
M16	1/2/3/4/5/6 on EC-	30
Compressor earth connection	Gnd on EC-	25
Tunnel terminal screw, water pump disconnect		
Disconnect switch 3RV101-	QM90-	2,5
Disconnect switch 3RV102-	QM90-	2,5
Disconnect switch 3RV103-	QM90-	4
Tunnel terminal screw, water pump contactor		
Contactor 3RT102-	KM90-	2,5
Contactor 3RT103-	KM90-	4

11.4.2 - Connection precautions for the compressor power terminals

These precautions must be applied during an intervention that requires the removal of the power conductors connected to the compressor supply terminals.

The tightening nut of terminal (6) supporting the isolator (7) must never be loosened, as ist ensures terminal tightness and compressor leak tightness.

The tightening of phase lug (4) must apply the torque between counter nut (5) and tightening nut (3): during this operation a counter-torque must be applied at counter nut (5). Counter-nut (5) must not be in contact with the tightening nut of terminal (6).

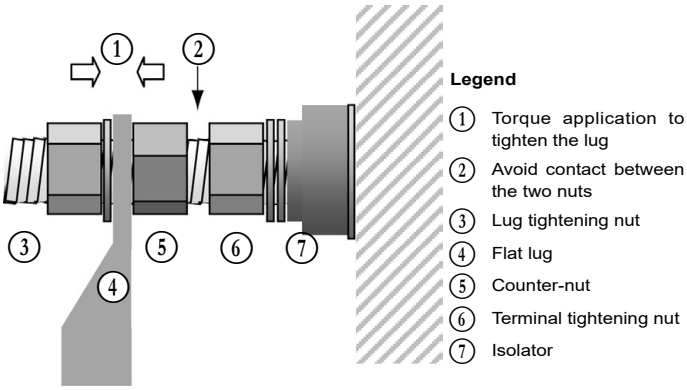

11.4.3 - Connection precautions for the power contactors

These precautions must be applied for the circuit equipped with 06TVW819 or 06TVA680 compressors. For this compressor, the power contactor type is 3RT1064 (Siemens).

The contactors allow two connection positions in the cage clamps. But only one position allows safe and reliable tightening on the contactor (KM1 or KM2). The conductor must be positioned in front of the connection area when it is tightened. If it is tightened behind the area, there is a risk that the brackets will be damaged during the tightening.

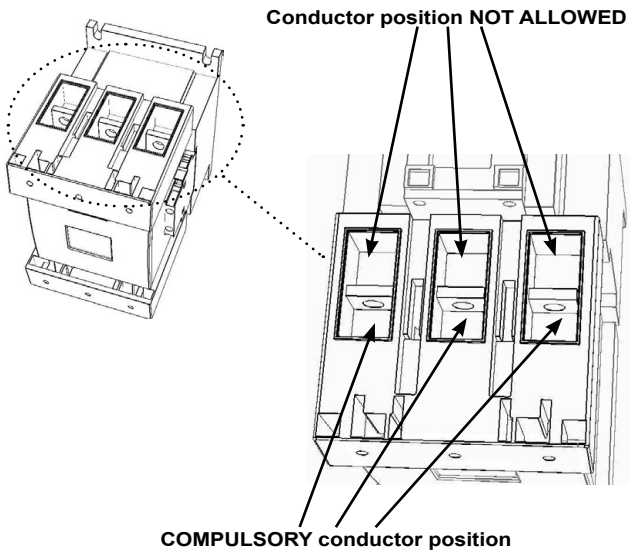

11.5 - Tightening torques for the main bolts and screws

Screw type	Used for	Torque value, N·m
M20 nut	Chassis	190
M20 nut	Heat exchanger side-side connection	240
M16 nut	Compressor fixing	190
H M16 screw	Heat exchanger water boxes, structure	190
H M16 screw	Compressor suction flanges TT	190
H M20 screw	Compressor suction flanges TU & TV	240
M16 nut	Compressor discharge line TT & TU	190
M20 nut	Compressor discharge line TV	240
H M12 screw	Economiser port flange & economiser port valve, option 92	80
H M8 screw	Drier cover	35
1/8 NPT connection	Oil line	12
TE nut	Compressor oil line	24,5
1 1/16-12 UNF-2A	Oil level	130
7/8 ORFS nut	Oil line & injection line	130
5/8 ORFS nut	Oil line	65
3/8 ORFS nut	Oil line	26
H M6 screw	Stauff collar	10
Taptite screw M6	Oil line collar	7
Taptite screw M6	Brass body, economiser line	10
Metric screw M6	Steel plate fixing, control box, terminal box	7
Taptite screw M10	Oil filter, economiser module, control box fixing	30

11.6 - Evaporator and condenser maintenance

Check that:

The insulating foam is intact and securely in place, the sensors and flow switch are correctly operating and correctly positioned in their support, the water-side connections are clean and show no sign of leakage.

11.7 - Compressor maintenance

11.7.1 - Oil filter change schedule

As system cleanliness is critical to reliable system operation, there is a filter in the oil line at the oil separator outlet. The oil filter is specified to provide a high level of filtration (5 µm) required for long compressor life.

The filter should be checked after the first 500 hours of operation, and every subsequent 2000 hours. The filter should be replaced at any time when the pressure differential across the filter exceeds 2 bar.

The pressure drop across the filter can be determined by measuring the pressure at the discharge port (at the oil separator) and the oil pressure port (at the compressor).

The difference in these two pressures will be the pressure drop across the filter, check valve, and solenoid valve. The pressure drop across the check valve and solenoid valve is approximately 0.4 bar, which should be subtracted from the two oil pressure measurements to give the oil filter pressure drop.

11.7.2 - Compressor rotation control

Correct compressor rotation is one of the most critical application considerations. Reverse rotation, even for a very short duration, damages the compressor and can even destroy it.

The reverse rotation protection scheme must be capable of determining the direction of rotation and stopping the compressor within one second. Reverse rotation is most likely to occur whenever the wiring at the compressor terminals has been modified.

To minimise the opportunity for reverse rotation, the following procedure must be applied. Rewire the power cables to the compressor terminal pin as originally wired. Apply a counter-torque at the lower nut at the supply cable terminal during installation.

For replacement of the compressor, a low pressure switch is included with the compressor. This low pressure switch should be temporarily installed as a hard safety on the high pressure part of the compressor. The purpose of this switch is to protect the compressor against any wiring errors at the compressor terminal pin. The electrical contact of the switch would be wired in series with the high pressure switch. The switch will remain in place until the compressor has been started and direction of rotation has been verified; at this point, the switch will be removed.

The switch that has been selected for detecting reverse rotation is Carrier part number HK01CB001. This switch opens the contacts when the pressure falls below 7 kPa. The switch is a manual reset type that can be reset after the pressure has once again risen above 70 kPa. It is critical that the switch be a manual reset type to preclude the compressor from short cycling in the reverse direction

11.8 - Expansion valves maintenance

Replacing of all expansion valves motor is mandatory after 33000 hours of operation.

Maintenance work must be carried out by a trained person fully qualified to work on these units. Please contact your Carrier Service representative for information.

NOTE: Any deviation or non-observation of these maintenance criteria will render the guarantee conditions for the heat pump unit null and void, and the manufacturer will no longer be held responsible.

11.9 - High pressure safety loop periodic test

In order to verify the full integrity of the safety loop, the following checks have to be performed periodically:

Contactors check

Complete loop operation check

11.9.1 - Power contactor check procedure

This procedure shall be applied for each compressor of the unit.

1- Switch off the power of the electrical equipment.

Apply all safety procedures for access to equipment with hazardous voltage.

2- Measure the resistance between upstream and downstream terminals of the main power contactors KM- and KM-D for each phase.

Note: calibrated Ohmmeter shall be used for this task.

3- Confirm resistance is more than 1.0 MOhm.

A resistance lower than 1.0 MOhm, indicates that contactor KM_ or KM_D is defective: further investigations and replacement of the failed part is required.

Illustration for step 2: resistance measurement

Downstream terminals of KM- and KM-D

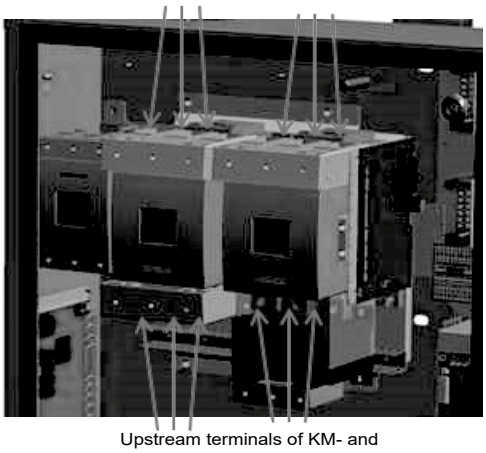

Upstream terminals of KM- and KM-D contactors

11.9.2 - Complete safety loop test

The purpose of this periodic test is to verify the proper functioning and setting of the high-pressure safety loop of a refrigerant circuit.

In order to reach the triggering pressure of the loop, the pressure and temperature thresholds activating the discharge of the compressor by the regulation system are raised.

This procedure must be repeated for each circuit of the unit.

1. Set up a calibrated pressure gauge on the high pressure part of the circuit (compressor discharge)
2. Reset all activated alarms
3. Activate the HP test mode for the corresponding circuit via the control interface.

Enable Quick Test Mode (Quick Test Menu> [QCK_TEST] parameter active)

Activate the high pressure test for the desired circuit (Menu Quick Test> parameter [HP_TEST] to 0 for circuit A or 1 for the B circuit. The corresponding circuit starts to perform the HP test.

4. Getting Started Machine
5. For water-cooled units, stop the circulation of the secondary circuit to the condenser in order to stop the condensation and cause the increase in pressure (this operation is managed by the control on air-cooled machines)
6. Record the trigger value
7. Check that both HPS were triggered

If both HPS have tripped, go to step 10

If only one of the HPS has tripped, go to step 8

8. Replace the triggered HPS with another system whose trigger value is adequate .

Alternatively, an emergency stop button can be installed.

9. Repeat steps 2 to 6
10. Check if the trigger values are correct

The release values should be between -1 .5 /+0.5 bars of nominal values indicated on the unit.

11. Reset all alarms
12. Reset all HPS

Note:

Access to the maintenance functions can be protected by a password. Contact your dealer or the manufacturer's service department for more information.

For step 8, the electrical disconnection of the triggered HPS and its substitution must be performed in an environment with live parts. All the procedures and authorization provided for this type of intervention must be respected.

The type of connector must be WAGO 231-302 or equivalent.

12 - FINAL SHUTDOWN

12.1 - Shutting down

Separate the units from their energy sources, allow them to cool then drain them completely.

12.2 - Recommendations for disassembly

Use the original lifting equipment.

Sort the components according to their material for recycling or disposal, in accordance with regulations in force.

Check whether any part of the unit can be recycled for another purpose.

12.3 - Fluids to be recovered for treatment

- Refrigerant
- Energy transfer fluid: depending on the installation, water, brine, etc.
- Compressor oil

12.4 - Materials to be recovered for recycling

- Steel
- Copper
- Aluminium
- Plastics
- Polyurethane foam (insulation)

12.5 - Waste electrical and electronic equipment (WEEE)

At the end of its life, this equipment must be disassembled and contaminated fluids removed by professionals and processed via approved channels for electrical and electronic equipment (WEEE).

13 - START-UP CHECKLIST FOR 61XWH UNIT (USE FOR JOB FILE)

Preliminary information
Job name:.....
Location:.....
Installing contractor: .....
Distributor: .....

Unit

Model:.....

Compressors

Circuit A
Model number.....
Serial number .....
Motor number .....

Circuit B
Model number.....
Serial number .....
Motor number.....

Evaporator

Model number.....
Serial number .....

Condenser Section

Model number.....
Serial number .....

Additional optional units and accessories.....
.....

Preliminary equipment check

Is there any shipping damage? ..... If so, where? .....
.....

Will this damage prevent unit start-up? .....

☐ Unit is level in its installation
☐ Power supply agrees with the unit nameplate
☐ Electrical circuit wiring has been sized and installed properly
☐ Unit ground wire has been connected
☐ Electrical circuit protection has been sized and installed properly
☐ All terminals are tight
☐ All chilled water valves are open
☐ All chilled water piping is connected properly
☐ All air has been vented from the chilled water circuit
☐ The unit is switched off again, after the pump test has been completed
☐ Chilled water pump (CWP) is operating with the correct rotation. Check the phase sequence of the electrical connection.
☐ Circulate chilled water in the water circuit for at least two hours, then remove, clean and replace the screen filter.
☐ The unit is switched off again, after the pump test has been completed.
☐ Inlet piping to cooler includes a 20 mesh strainer with a mesh size of 1.2 mm.

13 - START-UP CHECKLIST FOR 61XWH UNIT (USE FOR JOB FILE)

Unit start-up

☐ Oil level is correct
☐ All discharge and liquid line valves are open
☐ Locate, repair and mark all refrigerant leaks
☐ All suction valves are open, if used
☐ All oil line valves and economizer valves (if used) are open
☐ Checks have been carried out for any possible leaks. Unit has been leak checked (including fittings)
  ☐ on the whole unit
  ☐ at all connections
  Locate, repair, and report any refrigerant leaks.....
  .....
  .....
☐ Check that control box is vented – Fan on electrical box must be on before compressor start-up and during operation.
☐ Check voltage imbalance: AB ..... AC..... BC .....
  Average voltage = ... V
  Maximum deviation = ... V
  Voltage imbalance = ... %
☐ Voltage imbalance is less than 2%

WARNING: Operation of the unit with an improper supply voltage or excessive phase imbalance constitutes abuse which will invalidate the Carrier warranty. If the phase imbalance exceeds 2% for voltage, or 10% for current, contact your local electricity supplier at once and ensure that the unit is not switched on until corrective measures have been taken.

Check cooler water loop

☐ Water loop volume = ... litres
☐ Calculated volume = ... litres
☐ 3.25 litres/nominal kW capacity for air conditioning
☐ 6.5 litres/nominal kW capacity for process cooling
☐ Proper loop volume established
☐ Proper loop corrosion inhibitor included..... litres of.....
☐ Proper loop freeze protection included (if required).....litres of.....
☐ Piping includes electric heater tape, if exposed to temperatures below 0°C
☐ Inlet piping to cooler includes a 20 mesh strainer with a mesh size of 1.2 mm

Check pressure drop across the cooler

☐ Entering cooler = ... kPa
☐ Leaving cooler = ... kPa
☐ Leaving - entering = ... kPa

WARNING: Plot cooler pressure drop on performance data chart (in product data literature) to determine total litres per second (l/s) and find unit's minimum flow rate.

☐ Total = ... l/s
☐ Nominal kW = ... l/s
☐ Total l/s is greater than unit's minimum flow rate
☐ Total l/s meets job specified requirement of.....l/s

WARNING: Once power is supplied to the unit, check for any alarms (refer to the SmartVu™ Control IOM for the alarm menu).

Note all alarms:.....
.....
.....
.....

The quality management system of this product's assembly site has been certified in accordance with the requirements of the ISO 9001 standard (latest current version) after an assessment conducted by an authorized independent third party.
The environmental management system of this product's assembly site has been certified in accordance with the requirements of the ISO 14001 standard (latest current version) after an assessment conducted by an authorized independent third party.
The occupational health and safety management system of this product's assembly site has been certified in accordance with the requirements of the ISO 45001 standard (latest current version) after an assessment conducted by an authorized independent third party.
Please contact your sales representative for more information.

Order No: 10190, 04.2024. Supersedes order No: 10190, 11.2020.
Manufacturer reserves the right to change any product specifications without notice.

Carrier, Montluel, France.
Printed in the European Union.