MECHANICAL EXTRACT VENTILATION (MEV)

CMX-MULTI

KEY FEATURES

- Excellent SFP results down to 0.14 W/l/s
- CMX-MULTI-H has integral humidistat, ideal for specification works
- 3 inlet spigots for simplified multi-room extraction
- 204x60mm spigots allowing direct duct runs from the unit, saving time and money on site

PREMIUM PRODUCT

Code	Description	Unit
CMX-MULTI	CMX-MULTI Mechanical Extract Ventilation Unit	1
CMX-MULTI-H	CMX-MULTI Mechanical Extract Ventilation Unit with Integral Humidistat	1

CMX-MULTI Product Characteristics Database (SAP 2012)			
Kitchen + n wet rooms	Power (W)	Flow (l/s)	SFP (W/l/s)
Kitchen + 1 wet room	2.89	21	0.14
Kitchen + 2 wet rooms	4.5	29	0.16
Kitchen + 3 wet rooms	7.22	37	0.20
Kitchen + 4 wet rooms	11.13	45	0.24
Kitchen + 5 wet rooms	16.3	53	0.31
Kitchen + 6 wet rooms	22.42	61	0.37

PERFORMANCE

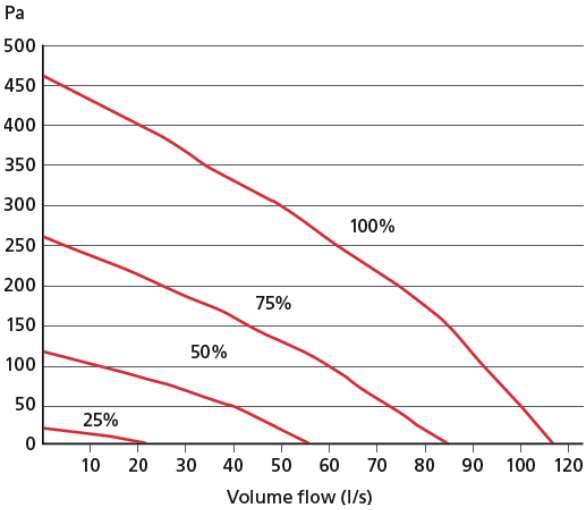

Specification	230V
Max Extract Volume (m³/h)	409
Max Extract Volume (l/s)	113.5
Max Pressure (Pa)	460
Max Power (W)	63.5
Supply Frequency (Hz)	50
Max Sound dB(A)@3m	45
Socket Size (mm)	204 x 60
Insulation Class	1
Weight (kg)	3.1
Max Operating Temperature (°C)	40

INSTALLATION

Must be installed horizontally.

- Direct to a ceiling or in a loft space
- Within a joist space

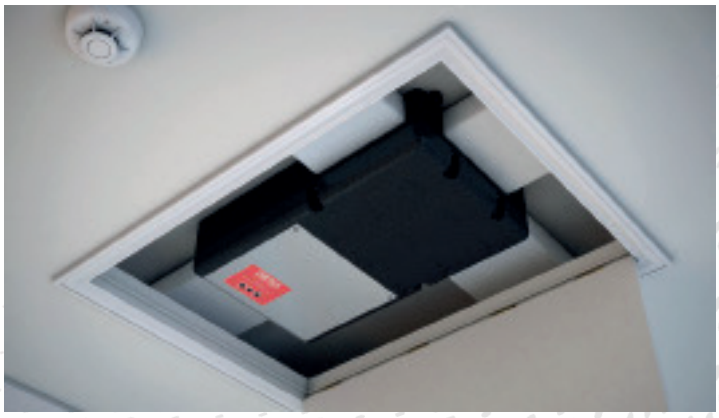

SOUND PERFORMANCE

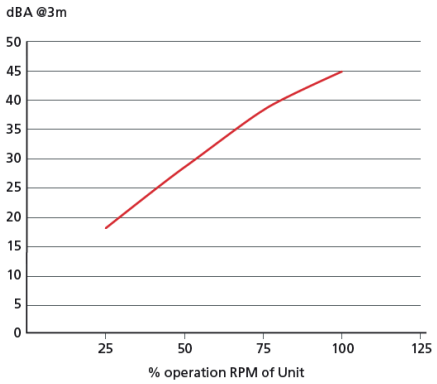

Breakout sound performance											
Fan speed	Test	Frequency/ Hz Sound Power Levels dB re 1pW								Breakout dBA @ 3m	LwA
		63	125	250	500	1K	2K	4K	8K		
100%	Open inlet	61	55	66	70	69	66	61	54	-	73
100%	Open outlet	56	56	69	75	72	71	65	57	-	77
100%	Breakout	56	59	64	65	59	56	49	37	45	65
75%	Open inlet	54	58	63	60	63	59	52	44	-	66
75%	Open outlet	49	53	66	69	66	65	57	48	-	71
75%	Breakout	49	59	61	57	53	49	40	28	38	59
50%	Open inlet	48	49	55	49	53	48	38	29	-	56
50%	Open outlet	46	47	58	54	54	52	42	32	-	58
50%	Breakout	40	49	53	48	42	37	25	13	28	49
25%	Open inlet	48	48	33	28	34	28	13	13	-	38
25%	Open outlet	46	46	38	36	33	29	22	21	-	39
25%	Breakout	46	52	35	30	27	19	6	2	17	37

DIMENSIONS

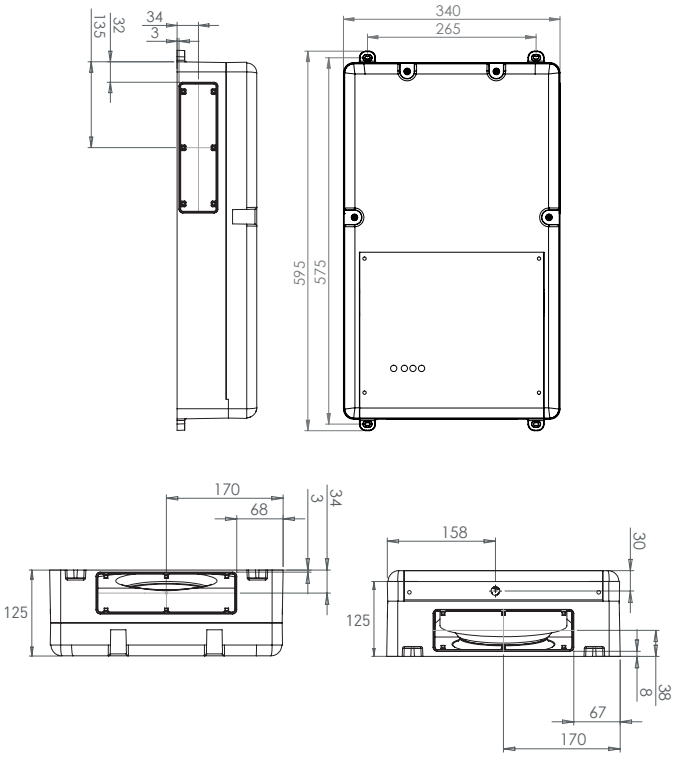

Models

CMX-MULTI/ CMX-MULTI-H

Controls	Low/Boost Switch	Occupied/Unoccupied Switch	Low/Boost/Purge Switch	Timer	Humidity	Neon Indicator	Duct Mounted Sensor	PIR	6 Input Junction Box	Air Supply Kit with White Cowl	Air Supply Kit with Brown Cowl
ANC848A	•										
ANC850A			•								
ANC108A				•							
ELE150R									•		
ANC802A				•	•						
ANC808A				•	•	•					
ANC846A				•	•		•				
ANC813A				•				•			

Visit our website to see our full range of Duct and Ancillaries. With 8 profiles to choose from Domus Ventilation can supply the entire solution via a wide selection of National stockist and distributors.

YOUR VENTILATION SPECIALIST

03443 715 523

www.domusventilation.co.uk

domusventilation_

©Domus Ventilation 2022. Issue date 2022-08

The information contained in this publication is correct at the time of print and is subject to change. Please visit our website for the latest information: **www.domusventilation.co.uk**

Domus Ventilation | Block C, Van Court, Caerphilly CF83 3ED, United Kingdom