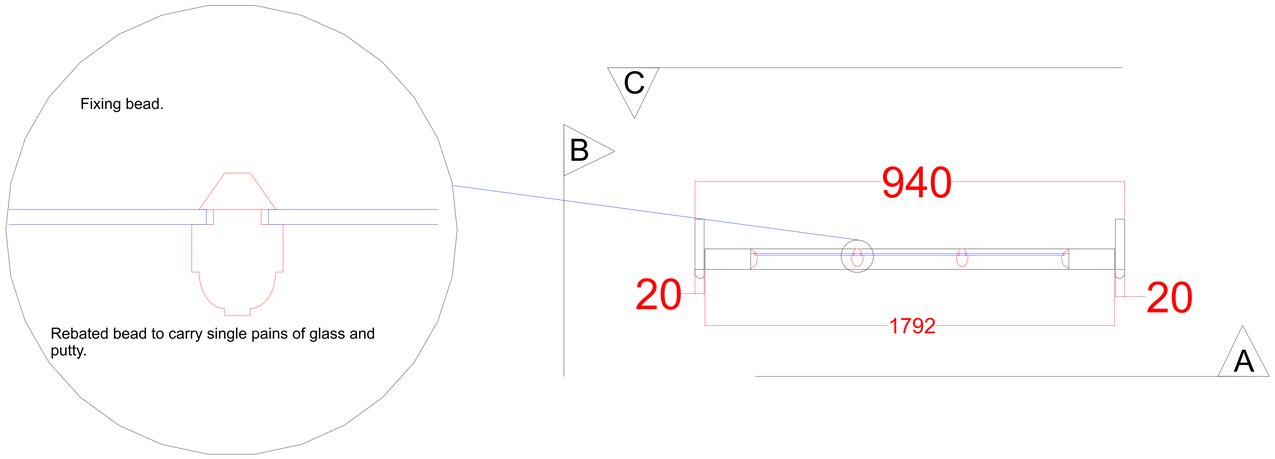

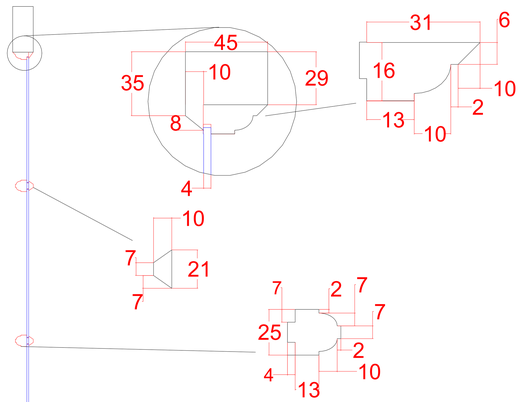

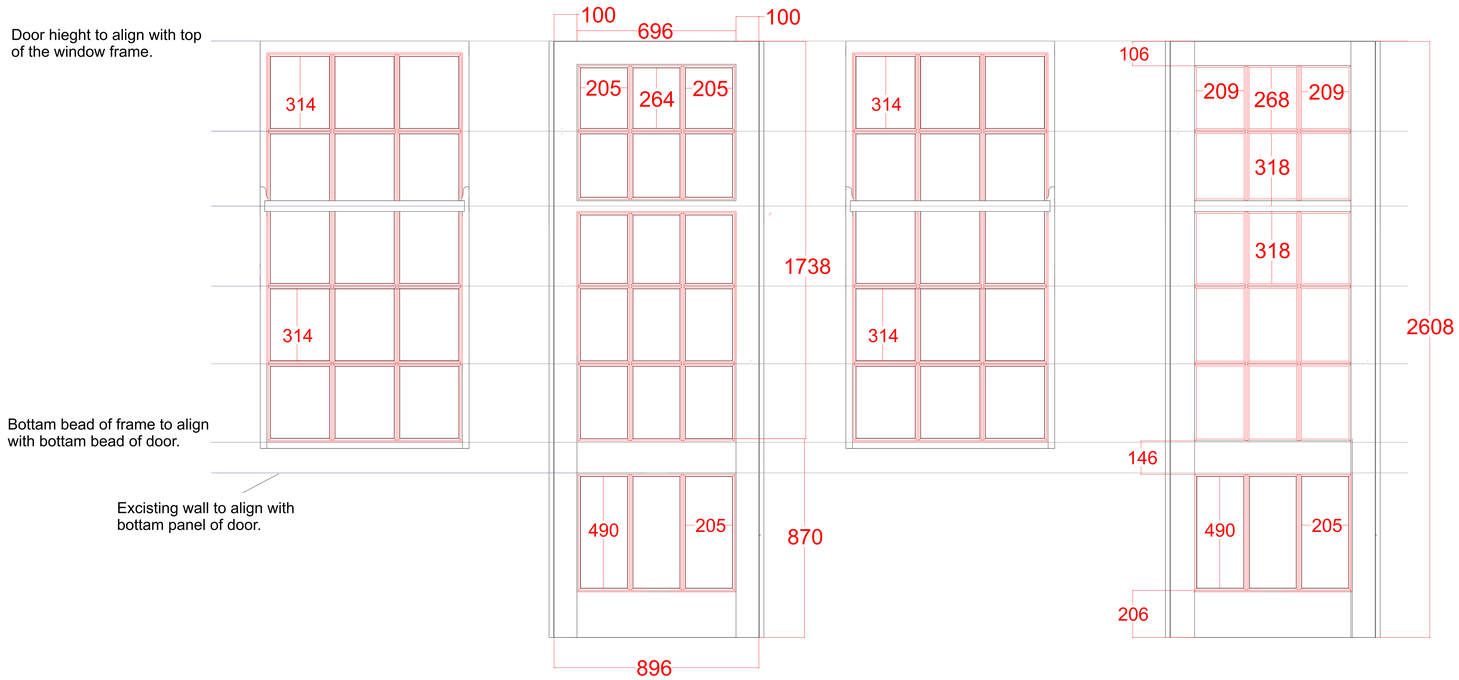

Elevation A.

Elevation C.

Elevation B.

CNM Joinery

Client :

DWG REV : C

Drawing title : sash style door.

Project : Sunlight House.

Drawing by : Michael White.

Date : 25/10/2024

Drawing not to scale.

All measurements in mm.

Blue lines indicate glass.

Red lines indicate beading.