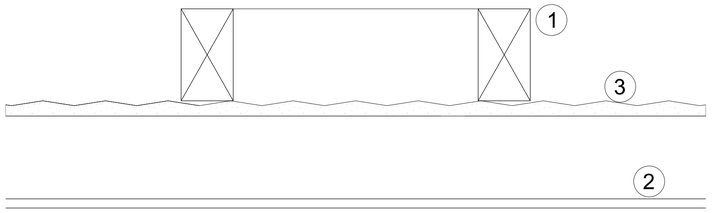

EXISTING SECTION

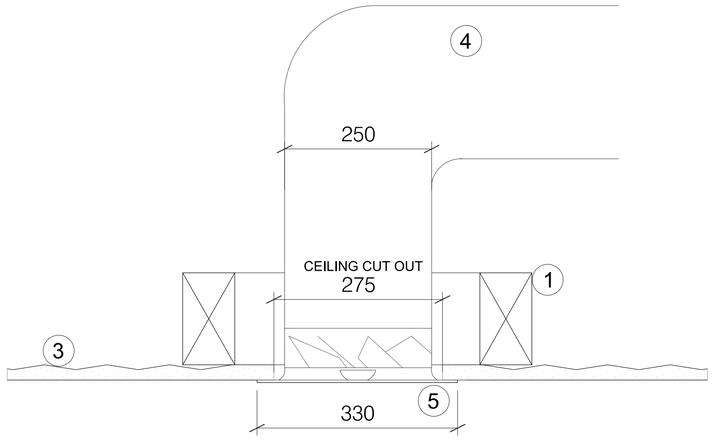

PROPOSED SECTION 01

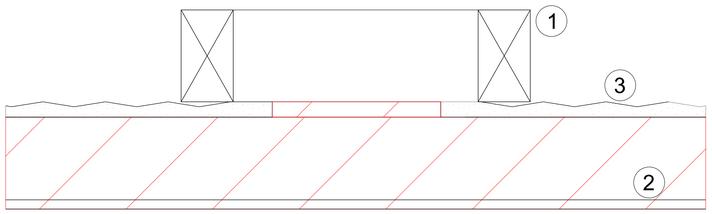

DEMOLITION SECTION

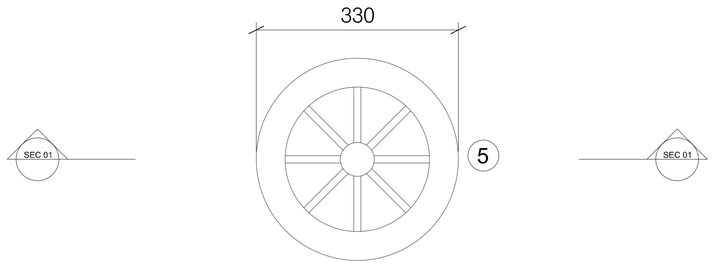

PLAN

NOTES / REVISION

REV A - OCTOBER 2024
DIFFUSER SPECIFICATION

KEY

1. ORIGINAL EXISTING TIMBER JOISTS

2. EXISTING DROP CEILING

3. ORIGINAL EXPANDED METAL PLASTER CEILING

4.PROPOSED DUCT WORK

5. PROPOSED SDFCH/250 WATERLOO HIGH CAPACITY SWIRL DIFFUSER

0	50	100	250	

PROJECT
ROYAL LONDON HOUSE, DEANSGATE, MACHESTER

CLIENT
AM ALPHA

TITLE
PROPOSED CEILING AND DIFFUSER DETAILS

SCALE	DATE
1:5@A1 1:10@A3	AUGUST 2024

JOB No	DWG No	REV
1573	AL(05)5405	**A**

ISSUE FOR
PLANNING

JB+CO ARCHITECTS + DESIGNERS

Jeffrey Bell Architects
3 Cobourg Street
Manchester
M1 3GY

t +44 [0]161 228 0651
e studio@jeffreybellarchitects.co.uk

© JEFFREY BELL ARCHITECTS
the copy right in this drawing is vested in Jeffrey Bell Architects and no license or assignment of any kind has been, or is, granted to any third party whether by provision of copies or originals of the drawings or otherwise unless otherwise agreed in writing

DO NOT SCALE FROM THIS DRAWING
the contractor shall check and verify all dimensions on site and report any discrepancies in writing to Jeffrey Bell Architects before proceeding with the work

FOR ELECTRONIC DATA ISSUE
electronic data / drawings are issued as 'read only' and should not be interrogated for measurement, all dimensions and levels should be read only from those values stated in text on the drawing