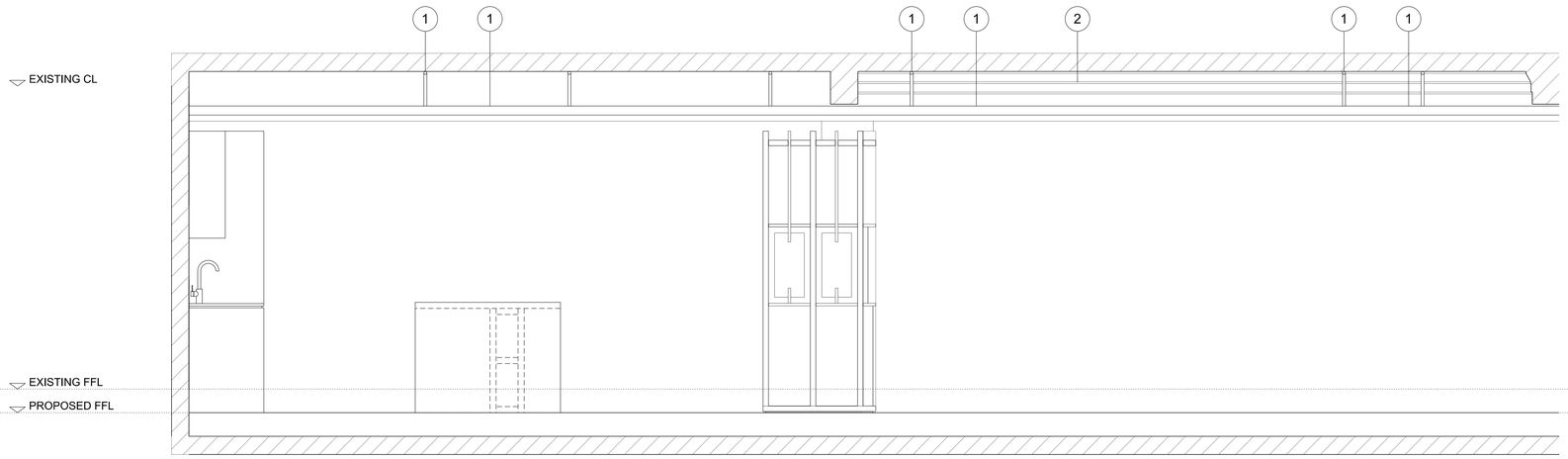

SECTION 1

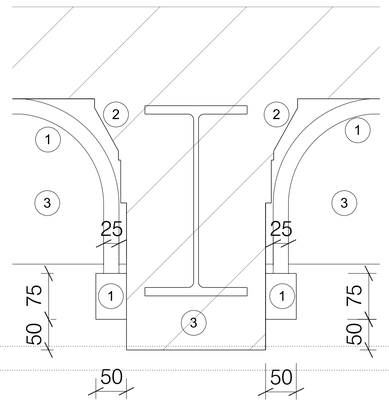

DETAIL SECTION

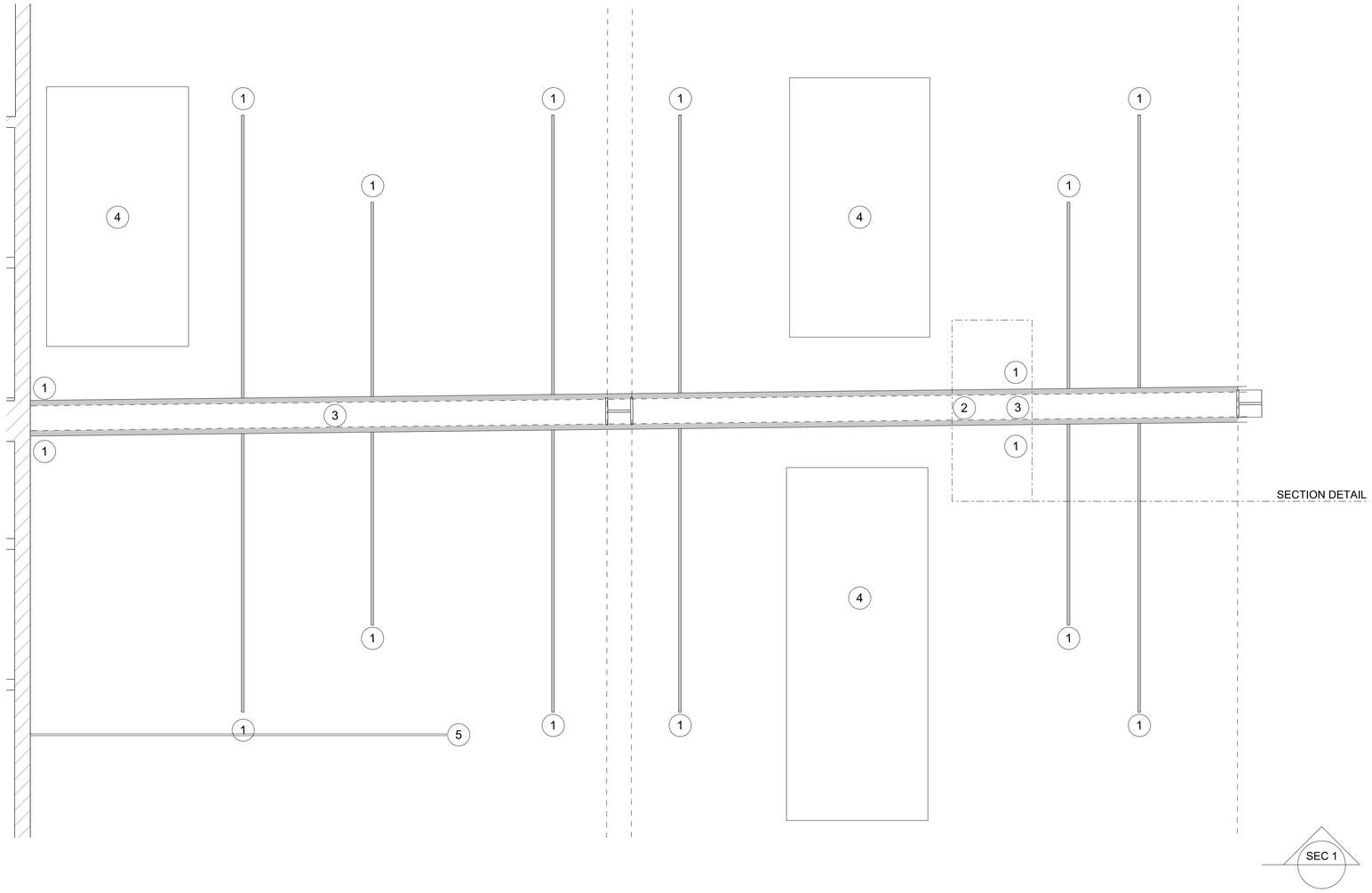

NOTES / REVISION

KEY

1. PROPOSED GALVANISED CONDUIT
2. EXISTING CORNICING
3. EXISTING BEAM
4. EXISTING CLOSED ROOFLIGHT
5. PROPOSED CURTAIN TRACK

0 250 500 1000

PROJECT
ROYAL LONDON HOUSE, DEANSGATE, MACHESTER

CLIENT
AM ALPHA

TITLE
PROPOSED 5TH FLOOR CONDUIT DETAILS

SCALE	DATE
1:25@A1 1:50@A3	OCTOBER 2024

JOB No	DWG No	REV
1573	AL(05)5411	

ISSUE FOR
PLANNING

JB+CO ARCHITECTS + DESIGNERS

Jeffrey Bell Architects
3 Cobourg Street
Manchester
M1 3GY

t +44 [0]161 228 0651
e studio@jeffreybellarchitects.co.uk

© JEFFREY BELL ARCHITECTS
the copy right in this drawing is vested in Jeffrey Bell Architects and no license or assignment of any kind has been, or is, granted to any third party whether by provision of copies or originals of the drawings or otherwise unless otherwise agreed in writing

DO NOT SCALE FROM THIS DRAWING
the contractor shall check and verify all dimensions on site and report any discrepancies in writing to Jeffrey Bell Architects before proceeding with the work

FOR ELECTRONIC DATA ISSUE
electronic data / drawings are issued as 'read only' and should not be interrogated for measurement. all dimensions and levels should be read only from those values stated in text on the drawing