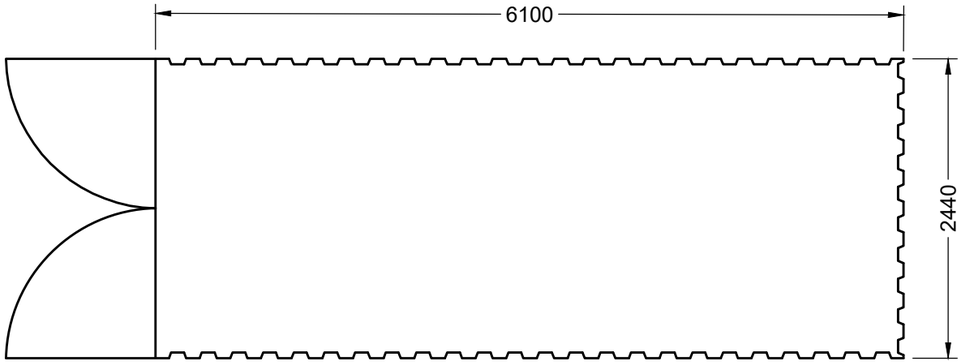

FLOOR PLAN

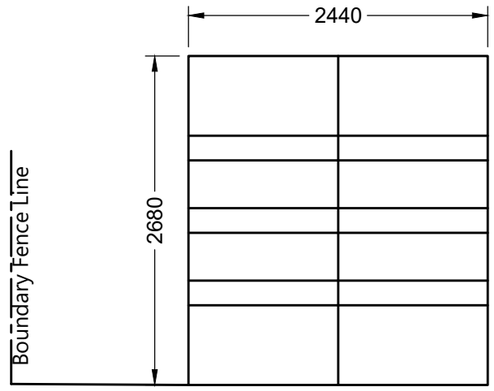

NORTH ELEVATION

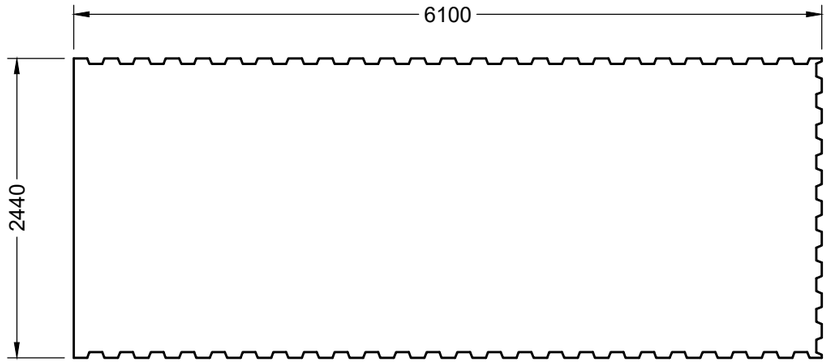

ROOF PLAN

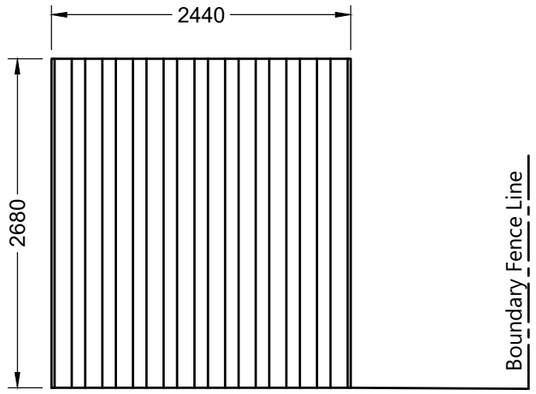

SOUTH ELEVATION

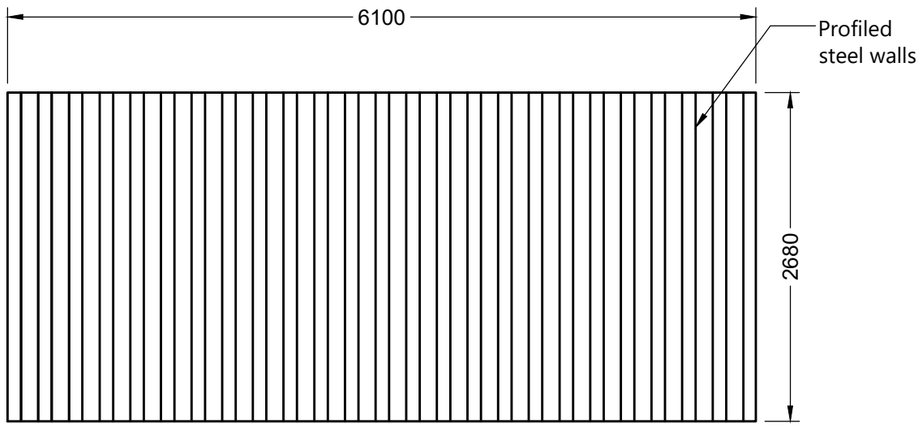

WEST ELEVATION

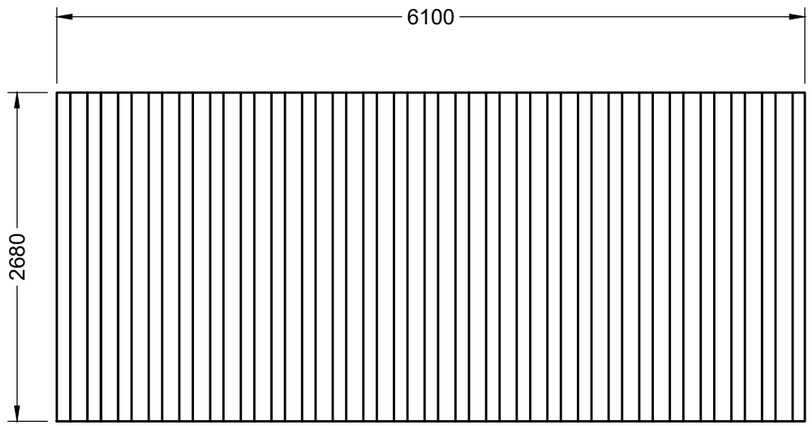

EAST ELEVATION

THIS DRAWING IS THE COPYRIGHT OF BURROWS GRAHAM LIMITED.

SAFETY, HEALTH AND ENVIRONMENTAL INFORMATION

IN ADDITION TO THE HAZARDS/RISKS NORMALLY ASSOCIATED WITH THE TYPES OF WORK DETAILED ON THIS DRAWING, NOTE THE FOLLOWING

CONSTRUCTION

MAINTENANCE

DEMOLITION

IT IS ASSUMED THAT ALL WORKS WILL BE CARRIED OUT BY A COMPETENT CONTRACTOR WORKING, WHERE APPROPRIATE, TO AN APPROVED METHOD STATEMENT

REV	DATE	BY	REVISION	CHKD
P01	20/11/24	HN	For planning submission	MG

Burrows Graham

North Office:
5 Ambassador Place, Stockport Road, Altrincham WA15 8DB
Tel: +44 (0)161 804 8046

South Office:
Buckland House, Dower Mews, High Street, Berkhamsted HP4 2BL
Tel: +44 (0)161 804 8046

CLIENT
WEST DIDSBURY & CHORLTON AFC

PROJECT
PROPOSED TEA BAR

DRAWING TITLE
STORAGE CONTAINER
FLOOR AND ROOF PLANS
ELEVATIONS

OUR PROJECT NUMBER	DRAWING STATUS	OFFICE	
30243	For Planning	NORTH	
SCALE @ A3	DATE	DRAWN BY	CHECKED BY
1/50	20/11/2024	HN	MG

DRAWING No	REV
30243-BGL-XX-XX-DR-S-004	P01