Series 33.
Insulated Rolling Shutter

Tested to the essential characteristics of EN13241:2003 + A2:2016.

- Thermal transmittance
- Acoustic sound reduction
- Resistance and wind load
- Safe operation

Our Series 33 Insulated Roller Shutter is a robust and energy saving product ideally suited to protect commercial and industrial premises. In addition, providing optimal thermal and acoustic insulation.

The shutter utilises a curtain assembled from a double skin, steel, curved lath where the outer skins are bonded directly together using a compressed polyurethane foam injection, providing extra strength and energy-efficiency. An anti-scratch, PVC coating applied to the curtain surface ensures a long lifespan and superior aesthetic qualities.

Powered by a Safedrive® operator, supplied by leading European door drive manufacturer, GfA Elektromaten. The Safedrive® range of operators feature a patented, integral safety brake (anti-fall device) and an emergency, low-level hand chain operation facility in case of mains failure.

The many activation and relevant safety device options can be configured to suit the environment in which the door is to be installed, ensuring simple and safe operation for the user, whether pedestrian, vehicular or a loading bay application.

Each design has been thoroughly tested and inspected by an accredited independent testing group enabling us to issue Declaration of Performance. Performance characteristics are according to harmonised standard EN 13241:2003 + A2:2016, giving our customers peace of mind that the door systems we manufacture are of the highest quality and are fully compliant with European directives.

All of our roller shutter systems are manufactured in house at our production facility in Wigan, Greater Manchester, and are subject to continuous product development, so the door user can be assured of both proven and state-of-the-art technology whilst maintaining ease of installation.

95mm Polyurethane foam-injected, double skin lath ensuring optimal thermal and acoustic insulation.

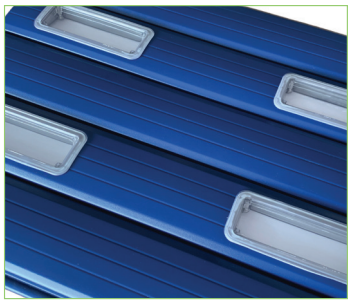

170mm x 45mm Perspex vision windows can be placed across individual lath to allow natural light transfer and visibility through the curtain.

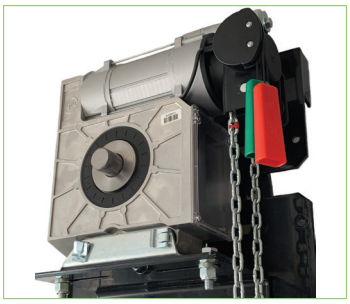

Powered by a Safedrive operator with integral anti-fall device.

Alliance Door Engineering Ltd.
Unit 1, Stephens Way, Warrington Road Industrial Estate, Wigan, WN3 6PH
01942 683601 | info@alliancedoors.co.uk | www.alliancedoors.co.uk

The Specification

Colour Swatch

Expertly crafted from high quality parts and finished in these colours.

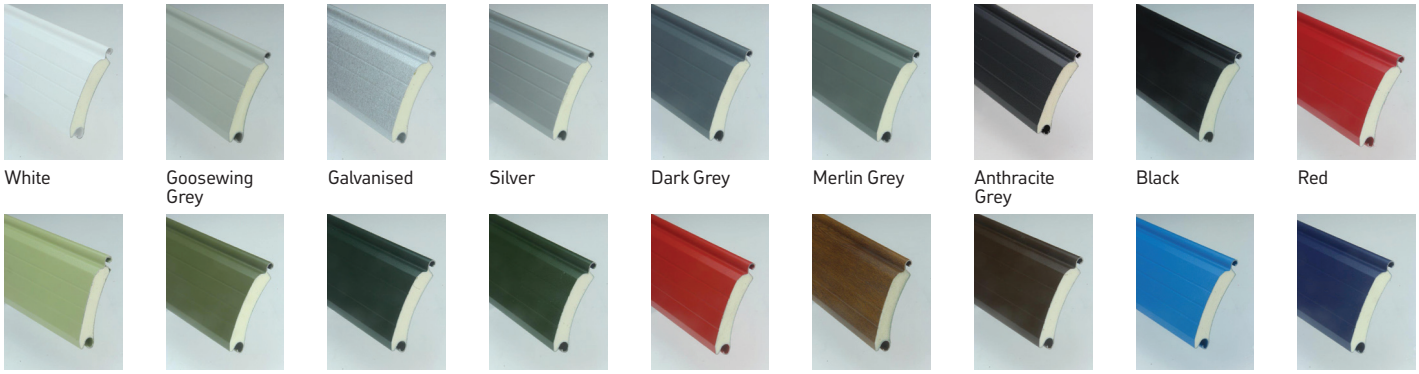

White | Goosewing Grey | Galvanised | Silver | Dark Grey | Merlin Grey | Anthracite Grey | Black | Red

Moorland Green | Olive Green | Dark Green | Juniper Green | Chilli Red | Golden Oak | Van Dyke Brown | Solent Blue | Sargasso Blue

Specification:

- Industrial steel, insulated curved lath with compressed foam injection
- Powered by GfA Safedrive® operator with integral anti-fall device
- Lintel brush, side seals and EPDM rubber bottom seal
- Heavy duty flag arrangement

Options:

- Wide range of colour options
- Vision windows
- Barrel canopy and motor cover for external applications
- Range of actuation and safety devices configured to suit each individual application
- High speed, automatic door option (Arctic Hare)

Mechanisms

Air Permeability:	Measured at 1.95 m3.h-1.m-2 @ 50Pa.
Thermal Insulation:	'U' Value 1.1 W/M²K Lath Core 'U' Value 3.3W/M²K Total Shutter
Acoustic Insulation:	The sound reduction capability of the roller door has been tested and found to produce a level difference of 22dB inclusive of flanking effects at the test location.
Wind Loading:	Tested to category 5 wind load

CLEAR HEIGHT B	DIMENSION A
UP TO 2500	400
UP TO 3750	450
UP TO 4750	500
UP TO 6251	550

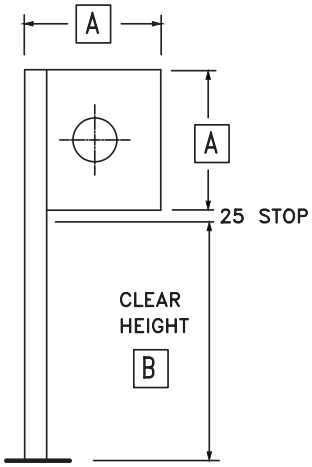

END VIEW

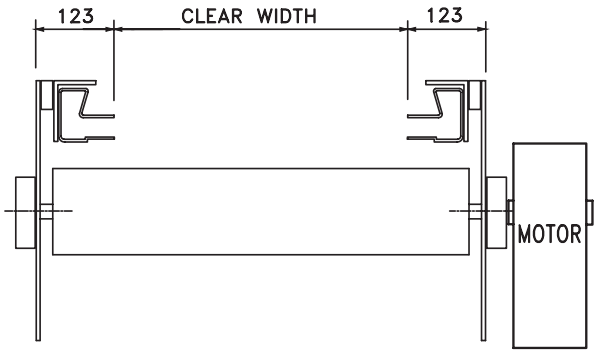

PLAN VIEW

This drawing is copyright and exclusive property of Alliance Door Engineering Ltd and must not be copied, used or exhibited without prior consent.

Alliance Door Engineering Ltd.
Unit 1, Stephens Way, Warrington Road Industrial Estate, Wigan, WN3 6PH
01942 683601 | info@alliancedoors.co.uk | www.alliancedoors.co.uk