PLANNING

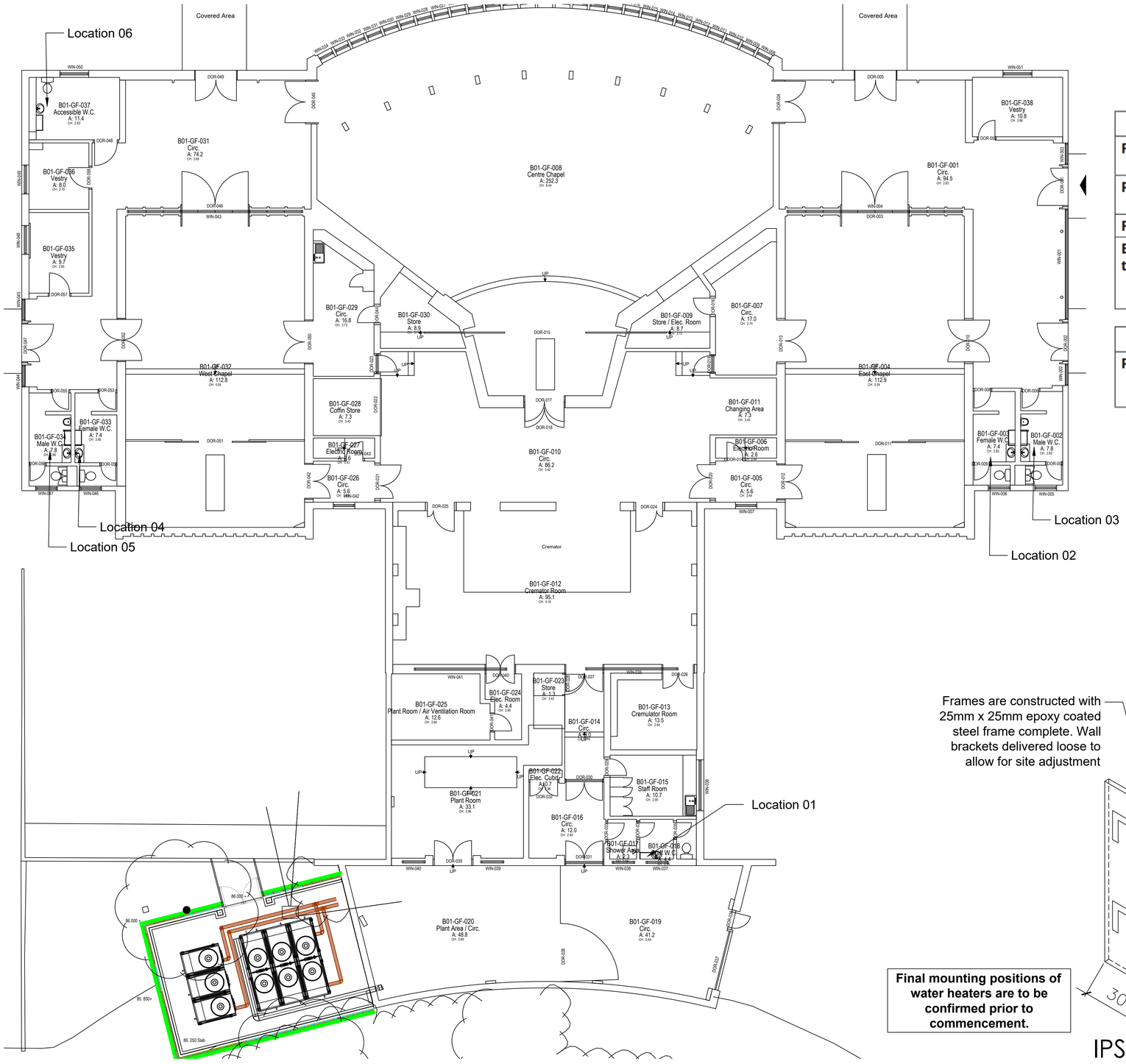

	Material
Framework	18mm (MRMDF) moisture resistant medium density fibreboard
Panels	18mm (MFC) melamine faced chip-board
Flashgaps	30mm (or 3mm high moisture)
Bulkhead / Sloping tops	Standard bulkhead to or through ceiling (depending on design) Optional - sloping tops 150mm at rear.

	Fittings
Panel clips	Mix of Ke Ku hook and peg push-on, pull-off panels and hinged and lockable

Frames are constructed with 25mm x 25mm epoxy coated steel frame complete. Wall brackets delivered loose to allow for site adjustment

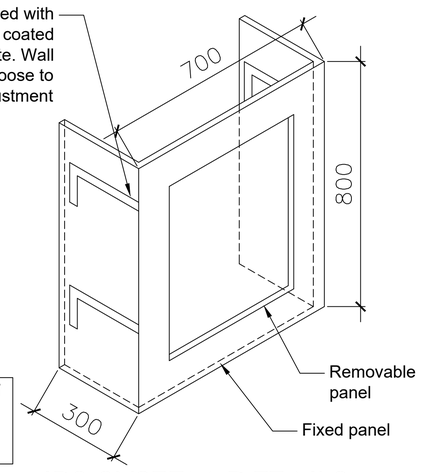

Final mounting positions of water heaters are to be confirmed prior to commencement.

IPS SYSTEM DETAILS

Notes:

Copyright: All rights reserved. This drawing must not be reproduced without permission from Drees & Sommer UK Ltd. Do not scale off this drawing. All dimensions are to be checked on site by contractor / sub contractor. Any discrepancies to be reported to Drees & Sommer UK Ltd.

DREES & SOMMER

Office Locations
Ashford, Birmingham, Leeds, Liverpool, London, Manchester & Oxford.
www.dreso.uk

Rev	Date	Revision notes	By	Check

Client MCC Equans PSDS	*Drawing Title* Blackley Crematorium IPS Cover for Water Heaters
Project Title Decarbonisation Scheme Blackley Crematorium	*Drawn* JH / *Date* 12/24
	Checked GM / *Date* 12/24

A1 *DWG No.* 24598.108 *Scale* N.T.S *Revision*