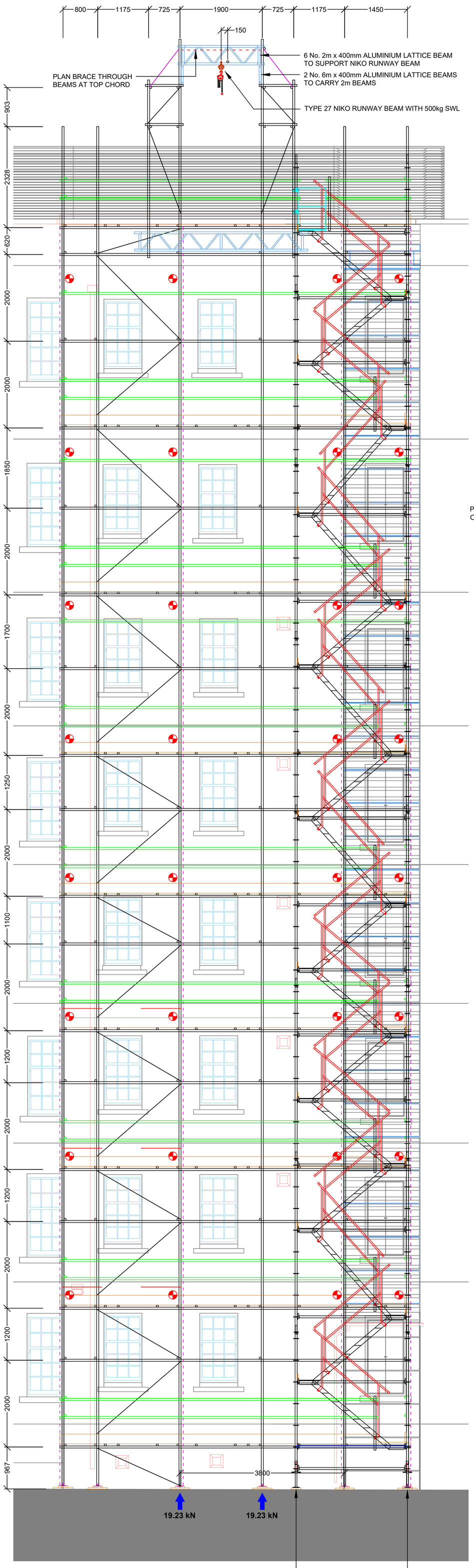

VIEW 3
Scale: 1:50

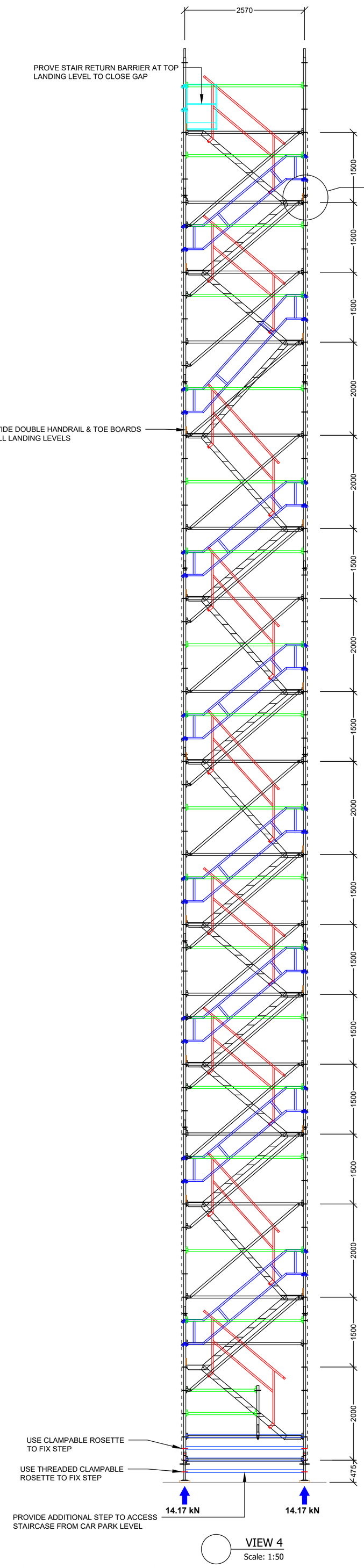

VIEW 4
Scale: 1:50

ALL SCAFFOLD TO BE ERECTED AND DISMANTLED USING NASC SAFETY GUIDANCE NOTE SG4:22 (PREVENTING FALLS IN SCAFFOLDING).

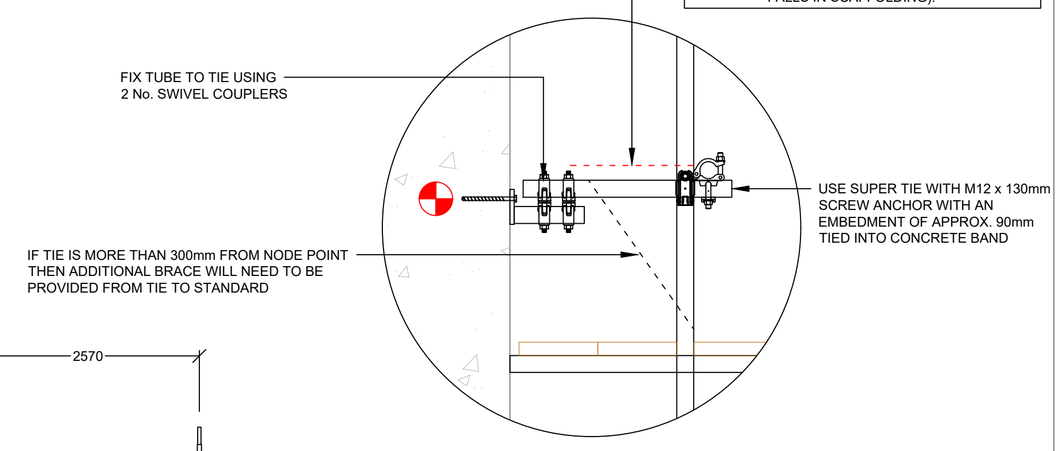

TIE DETAIL

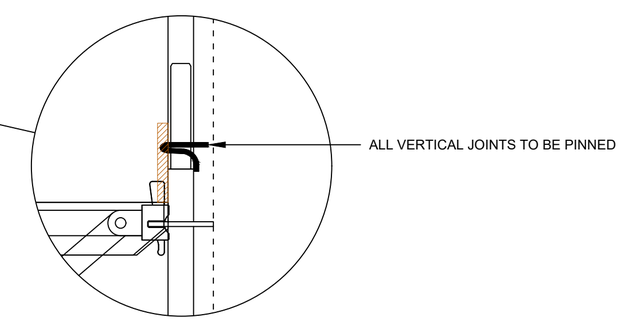

GENERAL NOTES

THIS DRAWING IS CONFIDENTIAL AND IS THE EXCLUSIVE PROPERTY OF PRO ACCESS SCAFFOLDING LTD. NO UNAUTHORISED USE, COPY, OR DISCLOSURE IS TO BE MADE AND IT IS TO BE RETURNED UPON REQUEST.

CONSTRUCT IN FULL COMPLIANCE WITH BS EN 12811-1 USING NASC TECHNICAL GUIDANCE TG20:21.

SCAFFOLD BUILT FROM TUBULAR MATERIALS AND FITTINGS CONFORMING TO BS 1139 OR TYPE 4 TUBE TO BS EN39. ALL TUBE MUST BE IN 'AS NEW' CONDITION. (UNLESS OTHERWISE NOTED)

SCAFFOLD BOARDS TO COMPLY WITH BS 2482:09.

SCAFFOLD BUILT WITH LOAD BEARING COUPLERS, EXCEPT INTERMEDIATE BEARERS, PURLINS OR BOARDS THAT ARE FIXED WITH NON LOAD BEARING COUPLERS.

ALL SERVICES, EQUIPMENT AND MATERIALS SUPPLIED BY PRO ACCESS SCAFFOLDING LTD ARE SUBJECT TO CONDITIONS OF CONTRACT.

THIS DRAWING HAS BEEN PREPARED FROM INFORMATION TAKEN FROM SITE SURVEYS OR INFORMATION SUPPLIED BY THE CLIENT. ALL INFORMATION GIVEN SHOULD BE CHECKED THAT IT HAS BEEN CORRECTLY INTERPRETED AND THAT ALL LOADINGS, DIMENSIONS, DETAILS, ERECTION AND DISMANTLING SEQUENCES ARE CORRECT AND PRACTICABLE. ANY ALTERATIONS TO LOADINGS MUST NOT BE MADE WITHOUT NOTIFICATION TO PRO ACCESS SCAFFOLDING.

NO SHEETING IS TO BE ADDED TO THE SCAFFOLD UNLESS ALREADY SHOWN ON THE DRAWING, OR WITHOUT REFERENCE TO PRO ACCESS SCAFFOLDING LTD.

NO TIES OR BRACING ARE TO BE REMOVED AND NO MODIFICATIONS ARE TO BE MADE TO THE SCAFFOLD WITHOUT REFERENCE TO AND APPROVAL FROM PRO ACCESS SCAFFOLDING LTD. ALL MODIFICATIONS / ALTERATIONS TO BE CARRIED OUT BY PRO ACCESS SCAFFOLDING.

PRO ACCESS SCAFFOLDING LTD WILL BE RESPONSIBLE FOR THE FINAL SETTING OUT AND LEVELLING OF THE SCAFFOLD. ANY ALTERATIONS NEEDED TO THE BASE WILL BE MADE BY THE CLIENT TO ENSURE THE GROUND IS STILL SUITABLE FOR THE IMPOSED LOADS.

ALL DIMENSIONS ARE AS STATED OR AS CALCULATED. DIMENSIONS IN MM UNLESS STATED OTHERWISE. DRAWINGS MUST NOT BE SCALED.

THIS DRAWING HAS BEEN PREPARED ON THE ASSUMPTION THAT ALL LOADS WILL BE APPLIED AXIALLY TO THE TUBES UNLESS SPECIFICALLY STATED.

SPECIAL NOTES

MAXIMUM LOADING FOR WORKING PLATFORM.	
1 @ 100% UDL LOADING	: 2.00 kN/m²
1 @ 50% UDL LOADING	: 0.75 kN/m²
HANDRAIL DESIGNED AGAINST	
MAXIMUM DOWNWARD LOADING	: 1.25 kN
MAXIMUM HORIZONTAL LOADING	: 0.30 kN
MAXIMUM UPWARD LOADING	: 0.30 kN
MAXIMUM LEG LOAD	: 23.08 kN
MAXIMUM GROUND BEARING PRESSURE	: 227.95 kN/m²
TIE LOAD AT FACE OF BUILDING	: 11.84 kN
TIE PROOF TEST LOAD	:13.98 kN
No. OF TIES	: 46
TIE LOAD AT INSIDE OF BUILDING	: 0.13kN
TIE PROOF TEST LOAD	:0.16 kN
No. OF TIES	: 16

IMPORTANT INFORMATION

THIS SYMBOL INDICATES ITEMS OF INFORMATION RELEVANT TO THE DESIGN. THESE ITEMS OF INFORMATION ARE NOT DESIGN BASED HAZARDS BUT MAY INFORM THE SCAFFOLD ERECTORS OF IMPORTANT POINTS TO TAKE INTO CONSIDERATION DURING CONSTRUCTION. THIS SYMBOL ALSO RELATES TO ITEMS THAT MAY HAVE BEEN OMITTED FROM THE DRAWING FOR CLARITY BUT WOULD STILL BE PART OF THE COMPLETED STRUCTURE I.E. LADDERS AND ACCESS POINTS.

RESIDUAL RISK ASSESSMENT

DESIGN BASED HAZARDS ARE ACTIVELY ELIMINATED WHERE POSSIBLE. WHERE HAZARDS CANNOT BE ELIMINATED, THIS SYMBOL ALONG WITH AN ATTACHED NOTE WILL IDENTIFY THE HAZARD, AND INDICATE THAT AN ACTION IS REQUIRED BY THE PERSON SUPERVISING THE WORKS TO MANAGE THE DESIGN HAZARD DURING CONSTRUCTION.

NOTE: IN ACCORDANCE WITH CDM PROCEDURES, THE PERSON SUPERVISING THE CONSTRUCTION MUST CONTACT THE DESIGN OFFICE BEFORE WORK COMMENCES, TO CLARIFY ANY IDENTIFIED HAZARDS.

THIS DRAWING IS TO BE USED IN CONJUNCTION WITH THE FOLLOWING ADDITIONAL DRAWINGS / SHEETS:

D5087-01 SHEET 1 OF 3	D5087-01 SHEET 3 OF 3	

APPROVAL DRAWING

FOR APPROVAL

REVISION	DESCRIPTION	BY	CKD	DATE
F	INTRODUCE PLAN BRACE TO TIE POINT	MAC	CNR	06-08-24
E	MOVE STANDARDS ON RISER	MAC	CNR	02-08-24
D	NOTES UPDATED	MAC	CNR	29-07-24
C	CHANGES AS PER CLIENT COMMENTS	MAC	CNR	18-07-24
B	ADD FACADE SCAFFOLD, STAIRCASE & HOIST	MAC	CNR	21-06-24
A	CHANGE BRACING	MAC	CNR	14-06-24
-	ISSUE WORKING DRAWING	MAC	CNR	07-06-24

MIDWAY DEPOT, STANBRIDGE ROAD
LEIGHTON BUZZARD
LU7 9HR
TEL: 01525 373752

CLIENT:

MYCO

CONTRACT: SUNLIGHT HOUSE, MANCHESTER

DESCRIPTION OF WORKS: ACCESS SCAFFOLD TO SERVICE RISER

DRAWN BY : MAC	CHECKED BY : CNR	JOB NO: 5218
DATE : 07-06-24	DRAWING NUMBER : D5218-03	REVISION: F
SCALE : AS SHOWN @ A1	SHEET NUMBER : 2 OF 3	