Existing signage drawings

Scale : 1:10 @ A3
Existing projection sign fixed to bracket on building.

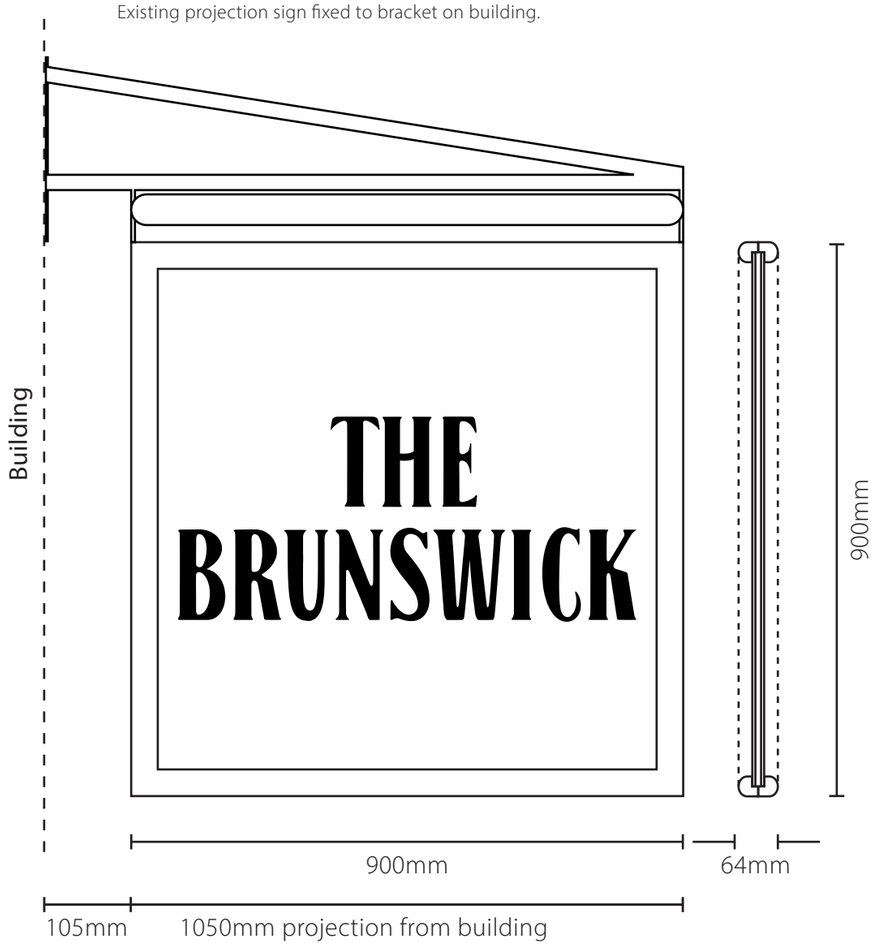

Scale : 1:10 @ A3
Existing copper lanterns either side of entrance.

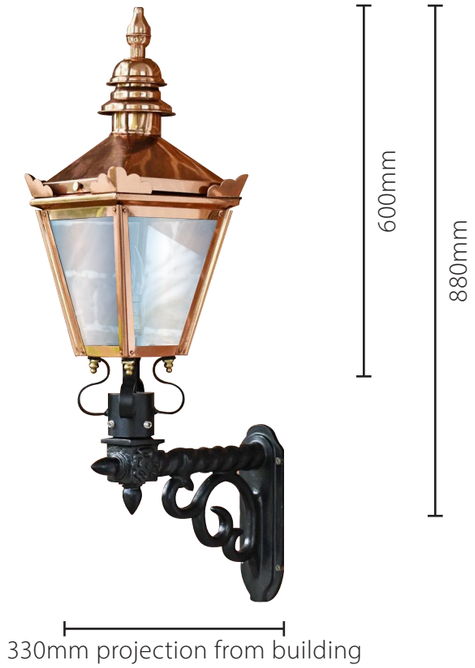

Scale : 1:20 @ A3
Existing curved sign face fixed with bolts to building.

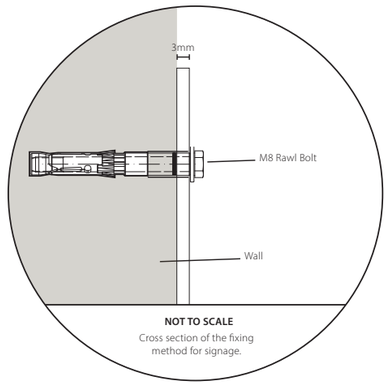

Scale : 1:10 @ A3
2no. Existing A1 poster cases either side of entrance.

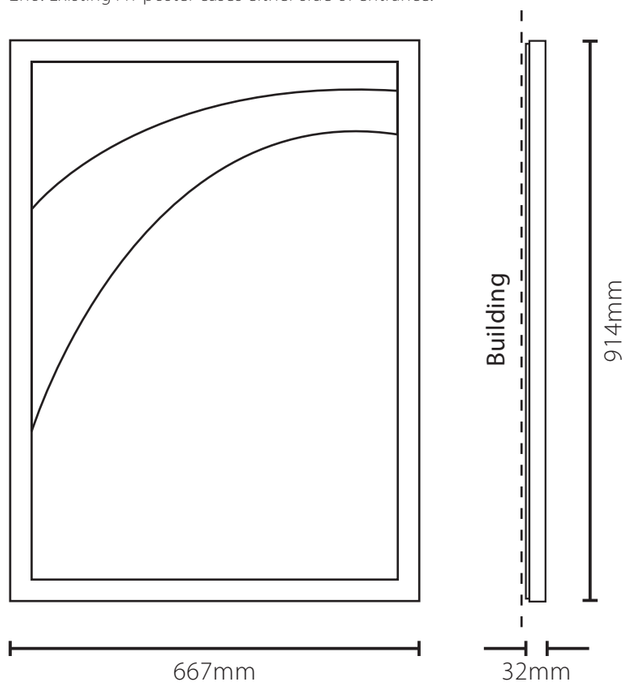

SPECIALIST SIGNAGE CONTRACTORS

UNIT 14
CREAMERY INDUSTRIAL ESTATE
BARNACRE, PRESTON
LANCASHIRE
PR3 1GD
01995 604122
design@csisigns.co.uk

The designs, illustrations, and photography is the property of CSI ltd. The contents are confidential, any form of reproduction, copying disclosure, modification or distribution without prior written consent is strictly prohibited.

Please note all colours shown are representative only and will not match sign products exactly. Please note paint codes and pantone codes where indicated.

Visuals shown are artists impressions only and must not be taken as an exact representation of the completed signage on site.

Project: The Brunswick, Manchester

Drawn By: K.D

Drawing No: CSI 211 L

Date: 25/02/2025

Revision: A

Trust Inns
Better Pubs through Better People