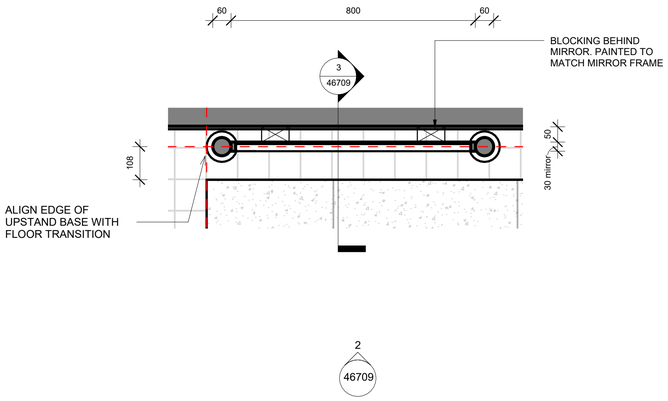

1 CHANGING ROOM MIRROR - JNR-06 - PLAN
1 : 10

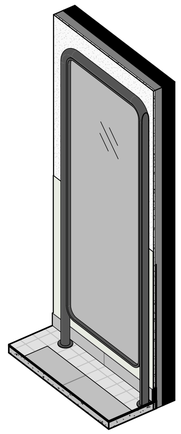

4 CHANGING ROOM MIRROR - JNR-06 - 3D OVERVIEW

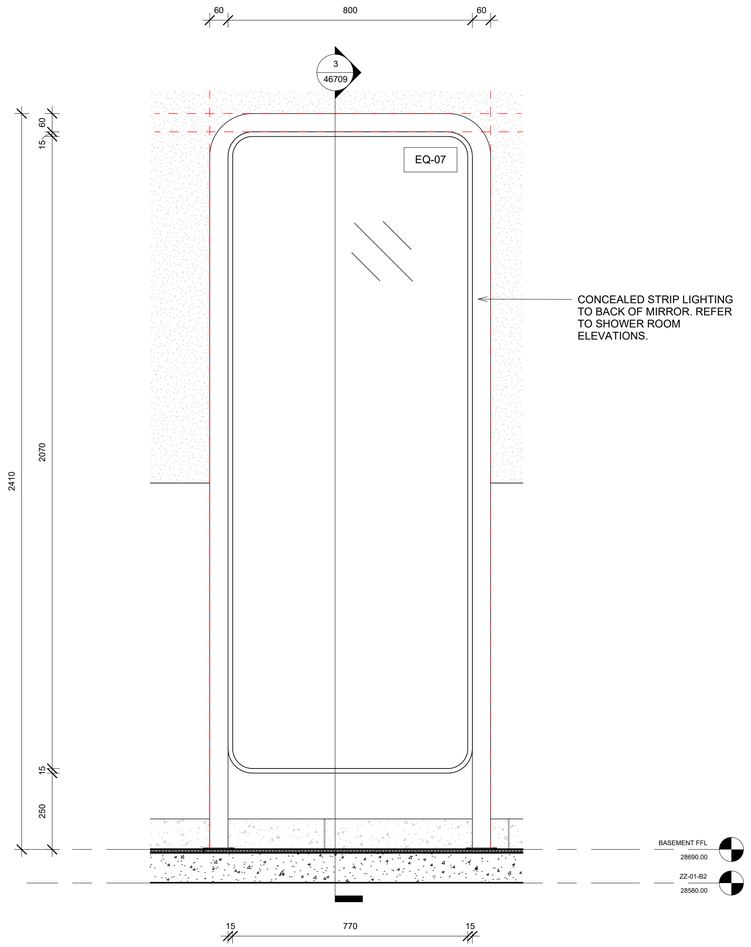

2 CHANGING ROOM MIRROR - JNR-06 - ELEVATION
1 : 10

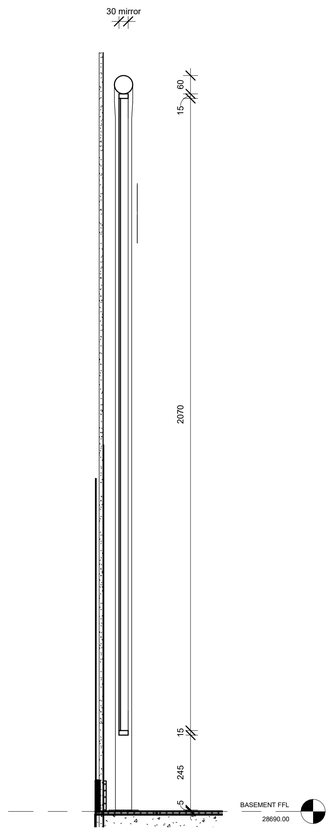

3 CHANGING ROOM MIRROR - JNR-06 - 3D SECTION
1 : 10

ANOMALY

General notes

1. This information is confidential and the copyright of Anomaly.

2. Anomaly accepts no liability for use of this drawing by parties other than the party for whom it was prepared or for purposes other than that which is stated on the issue sheet. It shall not be disclosed or passed to any other party in any form in whole or part without Anomaly's express permission in writing nor should any other party place reliance upon it.

3. Where data is supplied electronically, it is for convenience only. The original information is the printed or controlled copy which will be supplied on request.

4. All dimensions are in millimetres. No dimensions or other information shall be inferred from the electronic data unless specifically stated on the printed or controlled copy. Where dimensions are not given, drawings must not be scaled and the matter should be referred back to Anomaly.

5. This drawing should be read in conjunction with all other project information, produced by Anomaly and others. In the event of any conflict between the information contained on this drawing and in any other project document, drawings, specifications, schedules etc. the matter must be referred back to Anomaly for clarification.

6. All dimensions and conditions are to be checked on site by the contractor prior to preparing designs, drawings, calculations etc. or commencing any work. The contractor is responsible for checking that there is no conflict between site dimensions and drawn dimensions

Key plan

Drawing key

NOTE:

- DRAWING FOR INFORMATION ONLY
- DRAWING FOR INDICATIVE PURPOSES ONLY
- DRAWING NOT APPROVED BY MMC
- DRAWING NOT FULLY COORDINATED WITH ACOUSTIC ENGINEERS, MEP ENGINEERS AND FIRE ENGINEERS

NOTE:
- NOMINATED CONTRACTOR TO CHECK ALL DIMENSIONS, HEIGHTS AND SETTING OUT ON SITE.
- DRAWING ILLUSTRATES THE DESIGN INTENT FOR ROOMS. NOMINATED CONTRACTOR TO MODIFY AND ADJUST CONFIGURATION TO FIT APPLICABLE SPACES.
- REFER TO ARCHITECTURAL SPECIFICATION FOR ALL FINISHES AND FITTINGS.
- ALL DRAWINGS TO BE READ IN CONJUNCTION WITH MECHANICAL AND ELECTRICAL CONSULTANTS,' STRUCTURAL ENGINEERS' AND FIRE ENGINEERS' DRAWINGS AND SPECIFICATIONS.
- REFER TO FINISHES SCHEDULE FOR FURTHER INFORMATION.
- CONTRACTOR TO ALLOW FOR SUFFICIENT PATTRESSING FOR FIXTURES ON ELEVATIONS.
- TILE EDGE TRIM TO BE INCLUDED AT ALL INTERFACES BETWEEN TILE AND NON-TILE FINISHES.
- DOOR STOPS TO BE FITTED BEHIND ALL DOORS. CONTRACTOR TO ENSURE NO CLASHES WITH OTHER WALL FITTED ITEMS.

Existing Elements

Proposed Element

Status	Revision	Date	Description
S2	P01	13.01.25	STAGE 03

Designed by	Drawn by	Checked by	Approved by
JW / LHR / LE	LE / JW	DL / LHR	AM

Architect
ANOMALY
Morelands, 5-23 Old Street
London EC1 V9HL
+44 (0) 20 7054 1145
hello@anomaly.london
www.anomaly.london

Client
Karrev (Sunlight) Ltd

Project
Sunlight House - End of Journey
Little Quay Street
Manchester M3 3HP

Drawing title
PROPOSED JOINERY - CHANGING ROOM MIRROR - JNR-06

Job number	Sheet size	Scale @ A1
160	A1	As indicated

Project stage
STAGE 3

Drawing number
SLH-ANO-P0-B2-DR-A-46709

A1 sheet size

© Copyright - Anomaly