Figure B 15
Typical manhole detail – Type C
Depth from cover level to soffit of pipe less than 1.5 m
Rigid material construction

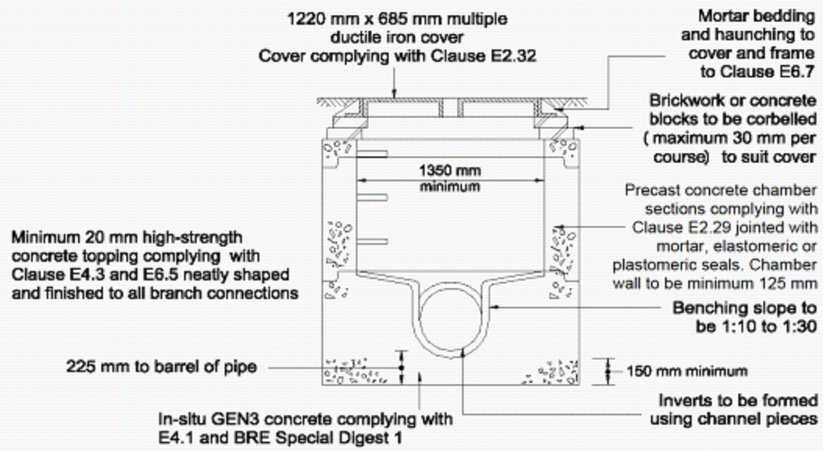

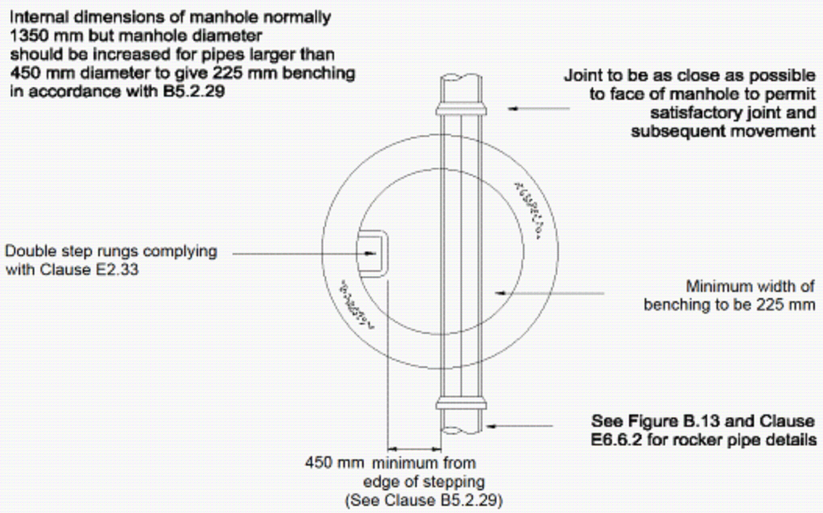

Note: The use of precast concrete chamber units to E2.29 with 150 mm GEN3 in-situ concrete complying with E4.1 and BRE Special Digest 1 in place of brickwork construction is permitted.

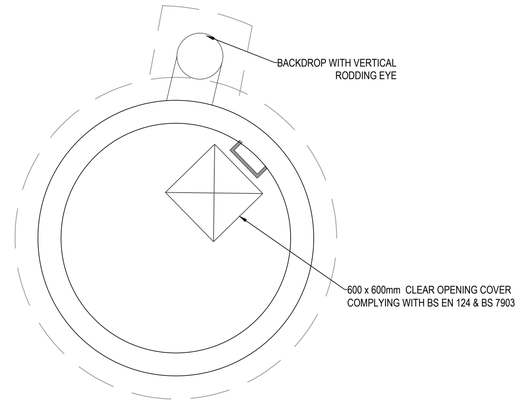

PLAN AT COVER SLAB

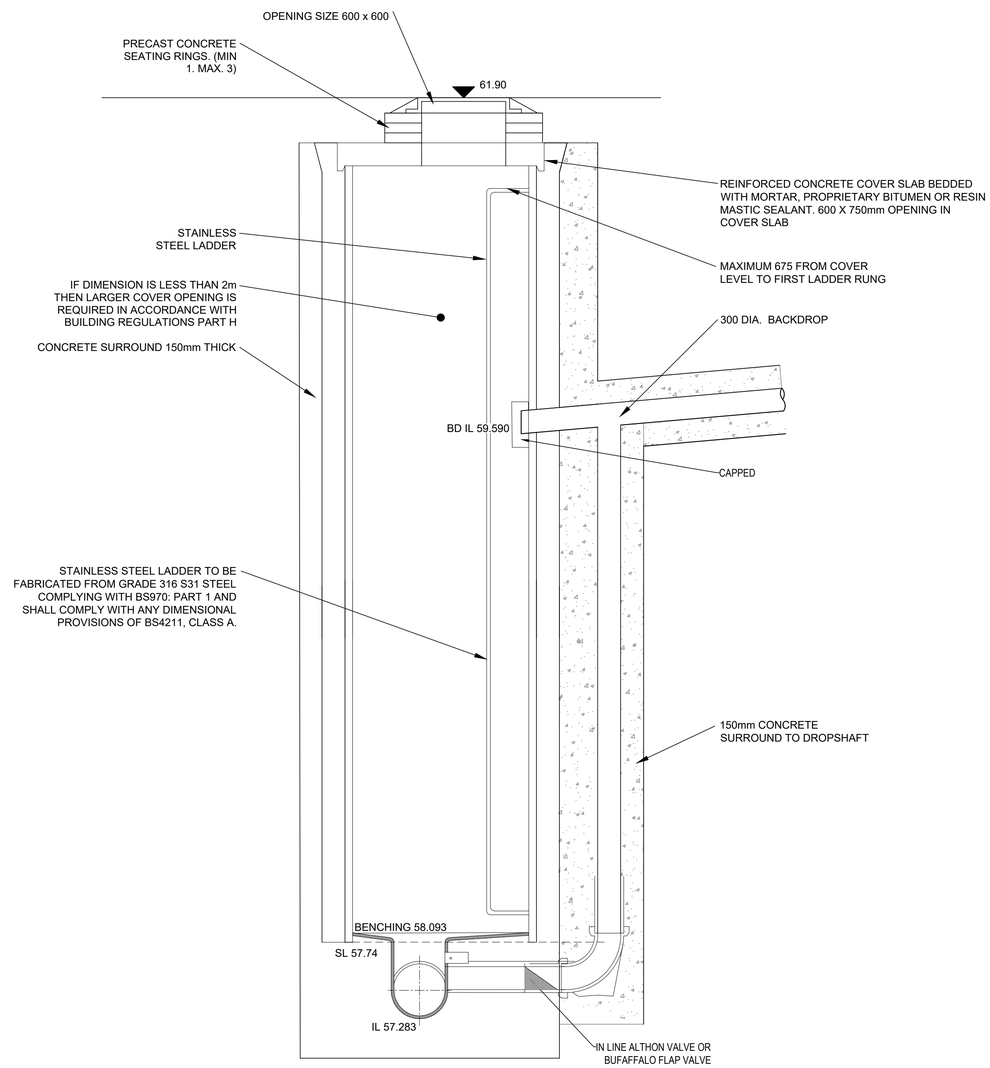

INTERMEDIATE SLAB FOR BACKDROPS HIGHER THAN 1.5 M

CONSTRUCTION RECORD - FINAL CONSTRUCTION

THE INFORMATION IS BASED ON CONFIRMATION FROM THE CONTRACTOR OF THE INSTALLED WORKS. THERE MAY BE VARIATIONS ON SITE WHICH ARE NOT REFLECTED ON THIS DRAWING AND HAS NOT BEEN VERIFIED BY CURTINS.

GENERAL NOTES:

1. THIS DRAWING IS TO BE READ IN CONJUNCTION WITH ALL RELEVANT ARCHITECTS AND ENGINEERS DRAWINGS AND SPECIFICATIONS.
2. DO NOT SCALE THIS DRAWING. ANY AMBIGUITIES, OMISSIONS AND ERRORS ON DRAWINGS SHALL BE BROUGHT TO THE ENGINEER,S ATTENTION IMMEDIATELY. ALL DIMENSIONS MUST BE CHECKED / VERIFIED ON SITE.
3. ALL DIMENSIONS ARE IN METRES UNLESS NOTED OTHERWISE.
4. SULPHATE RESISTANT CEMENT (C20-DC2) AND PRECAST CONCRETE PRODUCTS MUST BE USED OR A LABORATORY REPORT PROVIDED TO PROVE THAT SUCH PRECAUTIONS ARE NOT REQUIRED.

Rev:	Description:	Date:	By:	Chkd:
C03	CONSTRUCTION RECORD ISSUE	28.05.24	ATL	ATL
C02	BACKDROP UPDATED IN LINE WITH ON SITE INFORMATION	14/07/23	ATL	ATL
C01	CONSTRUCTION ISSUE	03/07/23	MW	MW

curtins
Merchant Exchange, 17-19 Whitworth Street West, Manchester, M1 5WG
0161 236 2394
manchester@curtins.com
www.curtins.com
Civils & Structures • Transport Planning • Environmental • Infrastructure • Geotechnical • Conservation & Heritage • Principal Designer
Birmingham • Bristol • Cambridge • Cardiff • Douglas • Dublin • Edinburgh • Glasgow • Kendal • Leeds • Liverpool • London • Manchester • Nottingham

Status: CR - CONSTRUCTION RECORD

Project: HAMMERSTONE ROAD DEPOT

Drg Title: DRAINAGE DETAILS SHEET 6

Project No:	Size:	Date:	Drawn By:	Designed By:	Checked By:
068065	A1	03/07/23	MW	MW	MW
	Scale: 1:20				

Project Code:	Originator:	Zone:	Level:	Type:	Discipline:	Category / Number:	Rev:
HRD	CUR	XX	ZZ	DR	C	92-526	C03

\\rna-fs-1\Projects\068001 - 068000\068065 - Hammerstone Road Depot\2NIS 4 Production\4B Models & Drawings_Civil-CAD\92\