Dodd Group Projects	Title	TECHNICAL SUBMISSION DOCUMENT FORM		
	Document Number	Revision	Date	Page
	DGP0051	2	15/10/2018	1 of 1

Sub-contractor	Dodd Group		
Project	Sandilands Primary School	Submission No.	TS-E-002 Rev P01
Description of Submission	EVC Chargers	Contract No.	108117

To Rolec EV

cc. ☒ M&E Consultant ☐ Main Contractor
☐ Architect ☐ Other (define)
☐ Structural Engineer

COMMENT OF THE FOLLOWING DOCUMENT IS REQUIRED

Equipment Specifying Schedule		Builder's Work Requirements	
Manufacturer's Data	X	Assembly / Installation Details	
Design Check Calculations		O & M Manuals	
Certified Performance Data		Reports	

Additional Submission Details

Signed (Originator) Hannah Thompson	Date Issued 28/06/2024	Date Comments Required 15/07/2024
Checked and approved before submission by Originator		

STATUS OF THE ABOVE *(TO BE COMPLETED BY RECIPIENTS)*

Status **A** = No comment, can be incorporated into the scheme
Status **B** = Minor discrepancies found as listed below. Submission can be incorporated
Status **C** = Submission unacceptable (as listed below), Resubmission required

Comments on submission

Signed Position Date

Name Representing

REVIEW

Comment

Signed Date

Name

CC ☐ Contract Manager ☐ M&E Design Co-ord / Manager ☐ Surveyor ☐ M&E S/C / Originator

This document does not constitute authority to proceed with a variation to the contract. Confirmation on issues to do with costs must be sought from the respective Dodd Group Surveyor

ROLECEV

BASICCHARGE

Intelligent EV charging pedestal

Manufactured in the UK

BASICCHARGE

Intelligent EV charging pedestal

The BASICCHARGE is a simplistic and affordable EV charging pedestal. This versatile charger's integrated LED amenity lighting also provides greater visibility of the charging bays and surrounding areas.

This future-proof OCPP compliant pedestal can offer a simple plug & charge or pay-to-charge solution via the EV driver's smartphone and/or RFID card/fob through any chosen OCPP back-office management system.

Feature-rich, this EV charger supports dynamic load balancing and is equipped with PME fault detection, so there is no requirement for an earth rod, reducing installation costs.

Available in 1way or 2way versions, providing up to 22kW superfast charging.

Product features

- Plug & charge, mobile app or RFID controlled charging
- Choose from 1x or 2x universal charging socket(s)
- Up to 7.4kW or 22kW charging output(s)
- PME fault detection (no earth rod required)
- Supports dynamic load balancing & static load management
- OCPP 1.6 compliant (can integrate with any back-office)
- Over-the-air firmware / software updates
- Built-in AC overload & fault current protection (RCBO)
- Built-in 6mA DC leakage protection
- Dual tamper and breach security notifications
- Cable lock security feature (can be permanently locked by user)
- Integrated RFID reader
- LED amenity lighting head (Photocell controlled)
- MID-approved energy metering
- 4G / Wi-Fi / Ethernet connectivity
- IK10 impact resistant design
- Surface or root mountable
- OZEV grant fundable
- Designed & manufactured in the UK

Powered by MONTA

Other preferred back-office and mobile app partners:

Fuuse

wattif

ChargePlace Scotland electric vehicle charging

ev.energy

OCPP 1.6 compliant

Ability to integrate with any OCPP compliant back-office management system and app.

Easy to operate

Three quick and easy ways to operate: mobile app, RFID cards and fobs or plug & charge.

Office for Zero Emission Vehicles

Eligible for grant funding

This range is approved for grant funding via the OZEV Workplace Charging Scheme (WCS).

4G / Wi-Fi / Ethernet enabled

Complete with secure 4G, Wi-Fi and Ethernet connectivity, ensuring chargers are always online 24/7.

Branding & colour options available

Rolec offers a bespoke chargepoint branding service; from logos & brand colours, to vinyl wraps.

No earth rod required

Equipped with built-in PME fault detection, saving installation time and costs.

The details

UP TO 22KW

Available in both single phase and three phase models, providing up to 22kW superfast charging.

BASICCHARGE is compatible with all EVs & PHEVs, charging at the fastest speed possible, ensuring vehicles are ready to go in no time.

2 WAY CHARGING

The BASICCHARGE is available in 1way and 2way versions, allowing up to two vehicles to charge simultaneously, using just one EV charging pedestal.

The perfect EV charging pedestal solution for fleet, workplace and private car park requirements.

ACCURATE BILLING

Built-in MID-approved energy metering ensures accurate consumption reporting, which is essential for businesses and residential car parks, wishing to bill for their usage. Use our back-office management platform to generate revenue by setting your own tariffs.

SAFE AND SECURE

Rest assured, Rolec's entire EV chargepoint range is fully UK Smart Charge Point Regulation compliant.

Over-the-air updates allow the chargers to receive the very latest features, ensuring a safe and future-proof product 24/7.

3 YEAR WARRANTY

Rolec EV chargepoints are designed, developed and manufactured in the UK and come with a 3 year warranty included as standard, for added peace of mind on your investment.

Specifications

Product Overview:

	Connection Type	Charging Output	Input Supply	Unit Colour	Product Code
Single Phase Units	1x Type 2 (IEC 62196) charging socket	Up to 7.4kW (32A)	1x 32A Single Phase 230V AC (±10 %) 50/60Hz	Black	ROLEC0211B
				Grey	ROLEC0211G
				White	ROLEC0211W
	2x Type 2 (IEC 62196) charging sockets	Up to 7.4kW (32A) per socket	1x 63A Single Phase 230V AC (±10 %) 50/60Hz	Black	ROLEC0221B
				Grey	ROLEC0221G
				White	ROLEC0221W
Three Phase Units	1x Type 2 (IEC 62196) charging socket	Up to 22kW (32A)	1x 32A Three Phase 400V AC (±10 %) 50/60Hz	Black	ROLEC0213B
				Grey	ROLEC0213G
				White	ROLEC0213W
	2x Type 2 (IEC 62196) charging sockets	Up to 22kW (32A) per socket	1x 63A Three Phase 400V AC (±10 %) 50/60Hz	Black	ROLEC0223B
				Grey	ROLEC0223G
				White	ROLEC0223W

BasicCharge 1way unit:

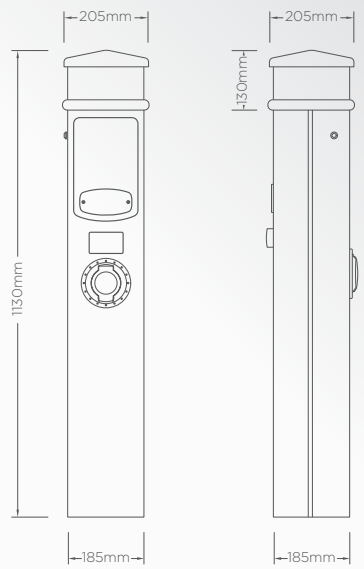

BasicCharge 2way unit:

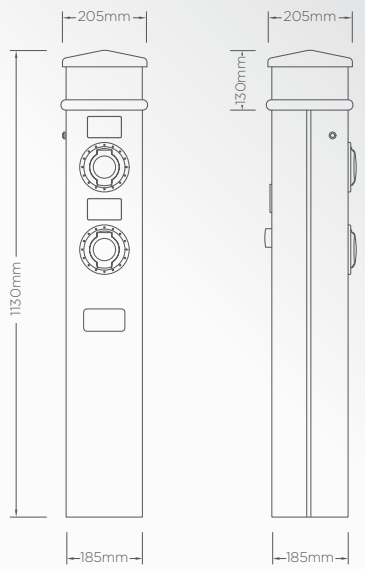

Ground mounting base:

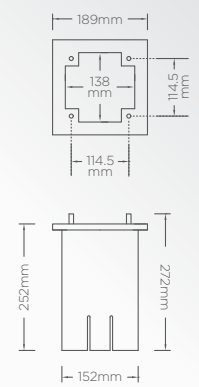

Specifications

Technical Data:

User Interface	• Mobile app • RFID reader (MIFARE ISO/IEC 14443 A) • Plug & charge • RGB LED status indicator halo(s) – configurable
Charge Protocol	Mode 3 (IEC 61851-1)
Protection	• AC overload & fault current protection – 40A 30mA Type A RCBO (per socket) • DC fault protection – 6mA • Lightning surge, over temperature protection • PME fault detection – No earth electrode/rod required • Supports automatic dynamic load balancing (may require additional hardware) • Supports static load management (software configurable)
Cable Terminals	• Single Phase – 3x 50mm 1P + N + E • Three Phase – 5x 50mm 3P + N + E

Communications	• 4G LTE Cat-1 (built-in nano SIM, subscription required)
	  • LTE FDD: B1/B3/B5/B7/B8/B20/B28
	  • GSM: B2/B3/B5/B8
	• Wi-Fi 802.11 b/g/n 2.4 GHz (2412-2472 MHz / 2422-2462 MHz)
	• NFC 13.56 MHz
	• RJ45 Ethernet connection
	• Bluetooth Low Energy (BLE 4.1) 2402-2480 MHz (for installer configuration purposes)
	• OCPP 1.6J
	• Cyber security – Data encryption level TLS 1.2

Energy Metering	Integrated Class 1 MID compliant metering
Amenity Lighting	360° Low energy LED • Rating – 2 x G9 2.3W LED, 230-240V AC • Colour temperature – 5000k • Protection – 6A 30mA Type A RCBO
Standby Power Consumption	• Charging circuits – < 7.5W (per socket) • Panel heater – 8W • Lighting – 4.6W
Dimensions	205mm x 1130mm x 205mm (W x H x D)
Weight	< 15kg (model dependant)
Environmental	• Ingress protection – Enclosure IP65, Socket IP54 • Impact protection – IK10 • Security – Dual tamper and breach notifications • Operating temperature – -30°C to +50°C • Operating humidity – 5% to 95%
Materials	• Substructure – Hot-dipped Galvanised Steel • Panel – 3.2mm Aluminium composite • Lens – High impact resistant 3mm Polycarbonate • Lid/collar – ABS Granulate Natural Polyethylene
Unit Colour	● Black ● Grey ○ White Other colours available upon request
Certifications & Compliances	• EV Charging Compliance – EN 61851-1:2019, EN 61851-22:2002 • Smart Charge Points – (SI 2021/1467) • Wiring Regulations – BS 7671:2018+A2:2022 • EMC Compliance – EN 61000-6-3:2007+A1:2011, EN 61000-6-2:2005, 2014/30/EU, SI 2016/1091 • Safety Compliance (LVD) – EN 62368-1:2014, 2014/35/EU, SI 2016/1101 • Communications / RED – EN 62311:2008, 2014/53/EU, SI 2017/1206, EN 300 330 V2.1.1 (2017-02), EN 301 908-1 V15.1.1 (2021-09), EN 301 908-13 V13.2.1 (2022-02), EN 301 511 V12.5.1 (2017-03), EN 300 328 V2.2.2 (2019-07), EN 300 440 V2.2.1 (2018-07) • Environmental Protection – BS EN 60529:1992+A2:2013 • Impact Rating – BS EN 62262:2002+A1:2021 • Metering – 2014/32/EU, SI 2016/1153 • RoHS – 2011/65/EU, SI 2012/3032 • REACH – 1907/2006, REACH etc. (Amendment) Regulations 2021 • Certification Markings – CE & UKCA
Warranty	3 years

Options & accessories

Product Code	Item Description
RFID0010	RFID card
RFID0020	RFID fob
GMCP0010	Ground mounting base for BasicCharge pedestal
EVCB0020	Root mount protection barrier – 48mm
EVCB0040	Surface mount protection barrier – 48mm
EVPS0010	EV parking sign – A4 landscape (Other sizes are available)
EVPP0100	5m 32A Type 2 to Type 2 charging cable
EVPP0107	10m 32A Type 2 to Type 2 charging cable
EVPP0105	5m 32A Three phase Type 2 to Type 2 charging cable
EVPP0108	10m 32A Three phase Type 2 to Type 2 charging cable (Other cables are available, including Type 1 options)
ACSR0125	100A up to 35mm² screened CT clamp with 10m cable

RFID0010
RFID0020

EVCB0040

EVPS0010

GMCP0010

EVPP0100

Branding & colour options available

Rolec offer a bespoke chargepoint branding service; from logos & brand colours, to vinyl wraps. This can be arranged at time of order. Contact Rolec for details.

Brand names, logos and trademarks used herein remain the property of their respective owners. This listing of any firm or their logos is not intended to imply any endorsement or direct affiliation with Rolec Services Ltd. and is purely to demonstrate branding opportunities.

Chargepoint management

Monta's chargepoint management platform provides businesses and organisations with the ability to deploy and self-manage their very own electric vehicle charging network. Ideal for workplace, fleet, commercial and residential locations.

Other preferred back-office partners:

Fuuse

wattif

ChargePlace Scotland
electric vehicle charging

+ many more

- Full & automated control of your chargepoints
- Unlock additional revenue streams
- Set chargepoints for public and/or private use
- Set different pricing for individual chargepoints & groups
- Dynamic pricing allows operators to set pricing in line with their hour-by-hour energy cost
- Fully scalable solution; add or remove chargepoints & users
- Complete fleet management solutions with analytical feedback & reporting
- Reduce charging costs and CO_2 with Smart Charge feature
- Vehicle integration provides visibility of battery size, SOC, percentage & location etc.
- Automatically reimburse employees' home charging
- Smart queuing system that sends notifications to drivers when they become available
- Over-the-air updates and self-healing algorithms ensure charger stability & availability
- Static, Dynamic or True Dynamic load balancing options
- EV Roaming feature, allowing chargepoints to be available on other apps

Charge point settings
Set charge point to public
Private Public

Reserve charge point
Book charge points at a time that suits you the best!
Reserve

Easy payment for your employees
Pay G Pay VISA

Charge revenue
Feb 23
+3.48%

For more information about Monta's chargepoint management solutions and pricing, see the Powered by Monta Overview Sheet

Chargepoint operation

Charge your EV on your terms. With Monta you have full control over your charging experience, at home or on the road.

- Easily locate and navigate using the chargepoint map
- Remotely control your home EV charging
- Choose your ready time and choose to prioritise lower costs, lower CO_2 or only using renewable energy
- Schedule charges so your car is ready when you are
- Integrate with most EV manufacturer apps and cars
- Real-time information on your car and battery levels to maximize your charging experience
- Share and give charging access to friends, family and guests
- Set your home charger for public use with custom pricing
- Access to over 300,000 public chargepoints across Europe
- Easily initiate charging and complete payments via credit card, Apple Pay, Google Pay or Monta Wallet
- Online chat or support line for help when you need it most

The Monta app is 100% free with no subscription cost when charging at home

Other preferred mobile app partners:

Fuuse

wattif

ChargePlace Scotland electric vehicle charging

ev.energy

DOWNLOAD THE APP

GET IT ON Google Play

Download on the App Store

RFID activation

Great for quick activation, RFID cards or key fobs are easily accessible and add for a much simpler charging experience, which can also be used alongside the mobile app.

For more details about the Monta solution for EV drivers and the Monta app, please visit **www.monta.com/uk/home-charging**

THIS DOCUMENT CONTAINS INFORMATION THAT IS SUBJECT TO CHANGE WITHOUT NOTICE.

The latest version of this publication can be downloaded at https://www.rolecserv.com/downloads-ev-charging

Illustrations of the product and user interface are for marketing purposes only.

Brand names, logos and trademarks used herein remain the property of their respective owners.
This listing of any firm or their logos is not intended to imply any endorsement or direct affiliation
with Rolec Services Ltd. and is purely to demonstrate branding opportunities.

© 2023 by Rolec Services Ltd. All rights reserved.

EVBD-V02-R8 BasicCharge Data Sheet

Manufactured
in the UK

ROLECEV

t: 01205 724754
e: enquiries@rolecserv.co.uk

www.rolecserv.com