# SL-03

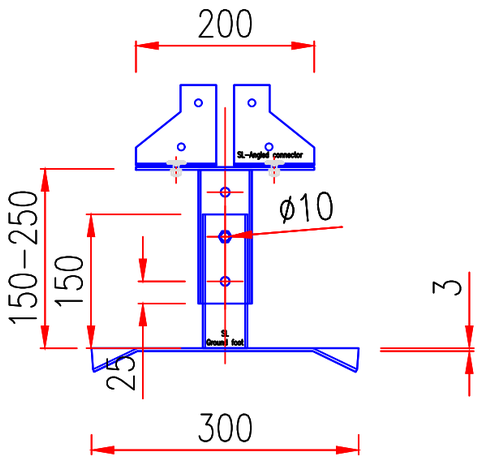


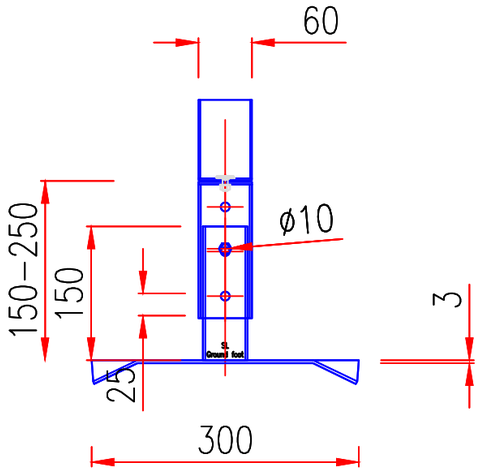


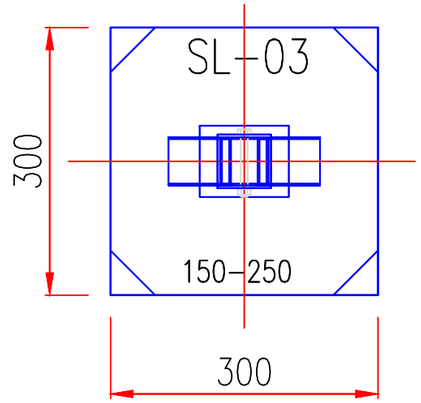


# SL-04

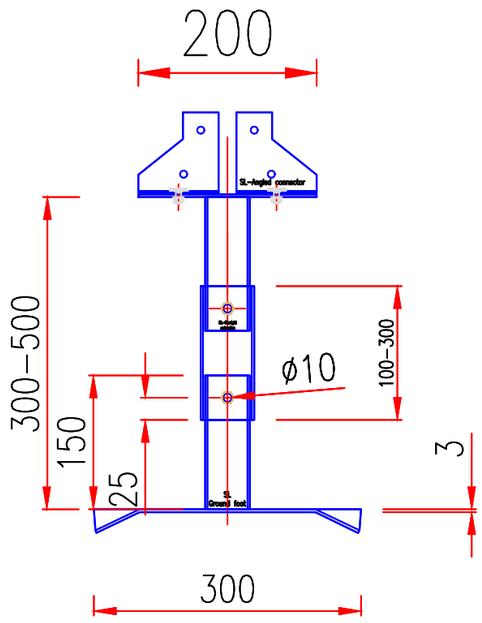


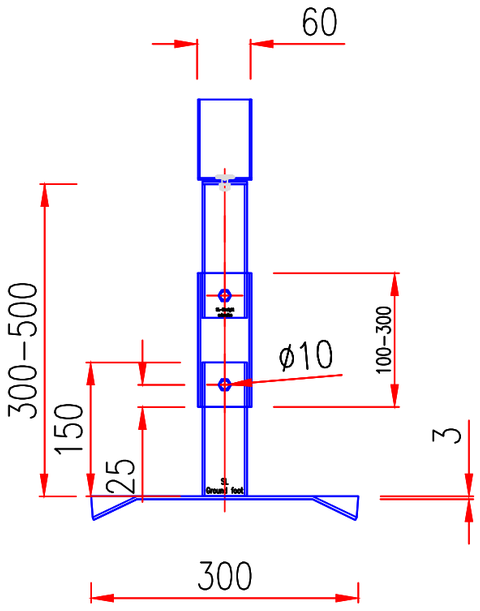


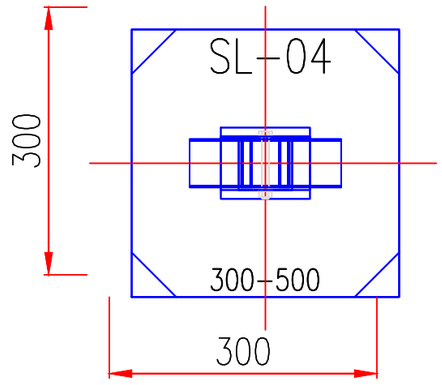


Project:
Modislide tubing
Location:
Zip World, Manchester, UK

This drawing and the specifications described within are the exclusive property of Swedice B.V. and JVA SPORTS sia. It may not be copied or authorised in writing by Swedice B.V. and JVA SPORTS sia.

Please note, colours may have been altered in reproduction. If colour references are not included in this artwork, actual colours will be provided for reproduction. Do not attempt to match colours from this artwork unless instructed to do so.

© Copyrights of Modislide
© Swedice B.V. 2023 – 2024
© sia JVA SPORTS 2023 – 2024

| | |
|---|---|
| x | Concept Design (CO) |
| | Schematic Design (SD) |
| | Design Development (DD) |
| | Construction Documentation (CD) |

Drawing issued for: Approval
(e.g. Comment, Approval, Costing, Manufacture, Information)

Drawing:

22 – Support construction for downhill slide

| | |
|---|---|
| Scale: | N/A |
| Paper size: | A3 |
| Designed by: | Dipl. eng. Janis Vanags |
| Page: | 0022 |
| Date: | 22.01.2025 |
| Stage: | Concept design |
| Use: | |

1. The drawing shows start platform technical design.

All dimensions are in milimeters

PRINT SCALE CHECK
0 10 20 30 40 50

modislide

P.O. Box 1239, 5200 BG 's Hertogenbosch, The Netherlands
Tel: +31 736400614 E-mail: design@swedice.com