This drawing is the property of Frederick G. Markland Associates Limited and should not be reproduced without written permission. Contractors are to check all levels and dimensions on site prior commencement of works and report any discrepancies to the designers. Do not scale this drawing.

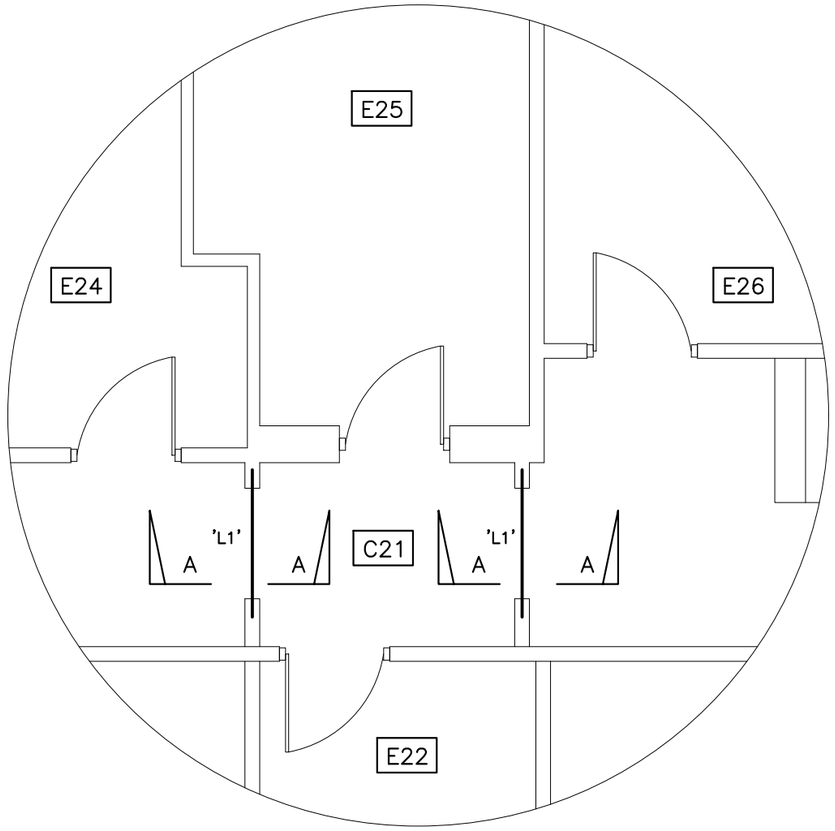

PART 2ND FLOOR PLAN SHOWING LOCATION OF DEFECTIVE LINTELS TO BE REPLACED (1:50)

REPLACEMENT LINTELS REF 'L1'

EXISTING DEFECTIVE TIMBER LINTELS TO BE REPLACED WITH NEW LINTELS.
NEW LINTELS TO BE 100mm WIDE x 150mm DEEP GRADE C24 TIMBER.
MINIMUM 150mm END BEARING.

CDM NOTES

INSTALLATION OF NEW BEAMS AND LINTELS

- Contractor is to provide adequate propping to areas prior to the commencement of any demolition works.
- All lintels to be installed to the manufactures specifications.

WORKING AT HEIGHT

- Contractor to ensure operators are securely restrained.
- Protective clothing to be used.
- Working area to be adequately cordoned off both at working level and below.

NOTE

DRAWING TO BE READ IN CONJUNCTION WITH:

- FG MARKLAND ASSOCIATES LTD STRUCTURAL REPORT REF 'Y24092' DATED JULY 2024
- HUTTON & ROSTRON ENVIRONMENTAL INVESTIGATIONS LTD TIMBER CONDITION SURVEY REPORT
- DREES & SOMMER UK DRAWINGS AND DETAILS.

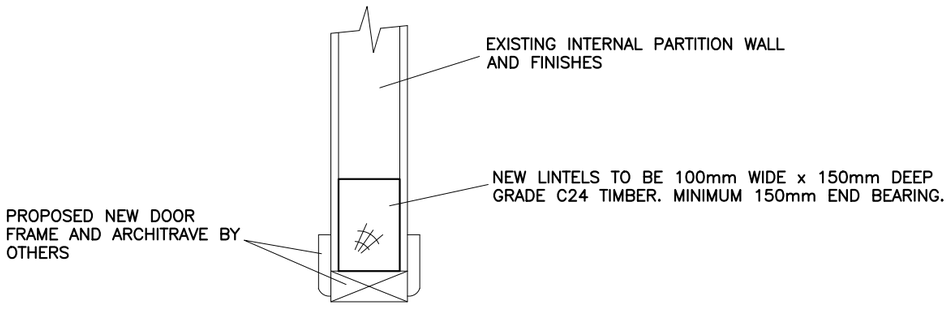

PROPOSED SECTION 'A'–A' (1:10)

REV	DESCRIPTION	INITIAL	DATE
A	SECTION 'A'–'A' ADDED FOLLOWING REQUEST.	NPC	15/10/24

Drawn By: NPC	Date: 04/09/24	Scale: 1:50	
Checked By: CM	Date: 04/09/24	Issue: Tender	
Job No.: Y24092	Drawing No.: A3/03	Revision: A	Plot Style: FGM

FREDERICK G. MARKLAND ASSOCIATES
Consulting Structural Engineers
a Corby House, 38A Chorley New Road, Bolton BL1 4AP
t 01204 531 208
f 01204 380 474
e fgmarkland@btconnect.com
w www.fgmarkland.co.uk

Client: Xaverian College

Project Title: Maryland Building Roof Remedial Works

Drawing Title: Corridor 'C21' Replacement of Existing Defective Lintels