WML CONSULTING
Civil, Structural and Geotechnical Engineers

Drainage Proposals Report

for

Ferrous

at

Chapeltown Street, Manchester

undertaken on behalf of

Capital & Centric

Report Ref: 9861-WML-00-XX-RP-C-0002- Rev 01
Date: March 2025

Report Title:	Drainage Proposals Report for Ferrous, Chapeltown Street, Manchester.
Report Reference:	9861-WML-00-XX-RP-C-0002- Rev 01
Client:	Capital & Centric
Issue Date:	March 2025
Drafted By:	Kevin Tyldesley
Authorised By:	Anna Wildman

This document has been prepared for the titled project (or named part thereof) and should not be relied upon or used for any other project without an independent check being carried out as to its suitability and prior written authorization being obtained from WML Consulting. WML accepts no responsibility or liability for the consequences of the use of this document, wholly or in part, for any other purpose than that for which it was commissioned. Any persons so using or relying upon this document for such other purpose do so at their own risk.

This report was prepared for the sole use of the Client and shall not be relied upon or transferred to any other party without the express written authorisation of WML. It May contain material subject to copyright or obtained subject to license; unauthorised copying of this report will be in breach of copyright/license.

The findings and opinions provided in this document are given in good faith and are subject to the limitations imposed by employing site assessment methods and techniques, appropriate to the time of investigation and within the limitations and constraints defined within this document. The findings and opinions are relevant to the dates when the assessment was undertaken, but should not necessarily be relied upon to represent conditions at a substantially later date.

The findings and opinions conveyed in this report are based on information obtained from a variety of sources as detailed and which WML assumes to be reliable, but has not been independently confirmed. Therefore, WML cannot and does not guarantee the authenticity or reliability of third party information it has relied upon.

Where opinions expressed in this report are based on current available guidelines and legislation, no liability can be accepted by WML for the effects of any future changes to such guidelines and legislation.

The limitations of liability of WML for the contents of this document have been agreed with the Client, as set out in the terms and conditions of offer and related contract documentation.

WML Consulting Ltd
No. 8 Oak Green,
Earl Road,
Stanley Green Business Park,
Cheadle Hulme,
Cheshire
SK8 6QL

Tel: 0161 482 0600
Email:info@wmlconsulting.com
www.wmlconsulting.com

1.0 INTRODUCTION

1.1 WML Consulting have been commissioned by Capital & Centric to provide a Drainage Proposals Report for a proposed development to be known as Ferrous, which is to be located on Chapeltown Street, Manchester.

1.2 In particular, the report has been composed to respond to the drainage related planning condition (number 10) contained in Manchester City Council's planning approval notice ref. 132214/FO/2021.

2.0 SITE LOCATION AND DESCRIPTION

2.1 The development is proposed on Chapeltown Street, Manchester, M1 2EY. A site location plan can be found at appendix 01.

2.2 The site is bounded on its northern side by Chapeltown Street, on its western side by an apartment block, on its southern side by Metrolink lines and to its eastern boundary is a small scale engineering facility associated with the Metrolink lines.

2.3 The site is currently a grassed area, though it has been developed in the past.

2.4 The site is relatively level, with a slight slope from east (47m AOD) to west (46m AOD).

2.5 A plan illustrating the existing site layout can be found at appendix 02.

3.0 DEVELOPMENT PROPOSALS

1.1 The proposed development involves the erection of a 15 storey building comprising 107 apartments (use Class C3), residential amenity facilities including a roof terrace, two ground floor commercial units (use Class E / Sui Generis), multipurpose event pavilion (use Class E / Sui Generis) and associated landscaping.

1.2 The proposed building will not have a basement or any below ground level habitable rooms.

1.3 Vehicular and pedestrian access to the proposed development will be directly from Chapeltown Street.

3.1 A plan indicating the proposed site layout can be found at appendix 03.

4.0 THE DESIGN TEAM'S RESPONSES TO PLANNING CONDITION 10

4.1 This report has been compiled to respond to the drainage related planning condition (number 10) contained in Manchester City Council's planning approval notice ref. 12214/FO/2021.

4.2 The text from planning condition 10 has been included below in blue font, and the design team's response to each of the issues raised has been provided in black italics.

4.3 Notwithstanding the details as set out within condition 2, no development shall take place until surface water drainage works have been submitted to and approved in writing by the Local Planning Authority in accordance with Non-Statutory Technical Standards for Sustainable Drainage Systems (March 2015) or any subsequent replacements national standards. In order to discharge the above drainage condition the following additional information has to be provided:

4.4 *Consideration of alternative green SuDS solution (that is either utilising infiltration or attenuation) if practicable;

Extracts from the intrusive site investigation report can be found at appendix 04. From these it can be seen that the ground conditions at the site are predominantly made ground over stiff clay. As such, it is considered that the use of SuDS soakaway / infiltration techniques is not feasible in this instance.

However, whilst the ground conditions at the site are not suited to the use of infiltration / soakaway techniques, it is proposed to utilise porous surfacing to hard landscaped areas, and also achieve some infiltration via the soft landscaped areas.

A copy of the proposed drainage layout drawing can be found at appendix 05. From this it can be seen that the surface water discharge rate is to be restricted / attenuated to the practical minimum of 5 l / sec for all storm events up to and including the critical 1 in 100 year event plus a 40% allowance for climate change.

4.5 *Runoff volume in the 1 in 100 year, 6 hours rainfall shall be constrained to a value as close as is reasonably practicable to the greenfield runoff volume for the same event, but never to exceed the runoff volume from the development site prior to redevelopment;

Given the relatively impermeable nature of the existing ground at the site, it is considered that during onerous storm conditions such as the 1 in 100 year, 6 hour event, there will be a significant runoff volume from the site to nearby off-site drainage systems.

To mitigate any potential increase in runoff volume as a result of the proposed development, and as mentioned above, the surface water discharge rate is to be restricted / attenuated to the practical minimum of 5 l / sec for all storm events up to and including the critical 1 in 100 year event plus a 40% allowance for climate change.

4.6 *Evidence that the drainage system has been designed (unless an area is designated to hold and/or convey water as part of the design) so that flooding does not occur during a 1 in 100 year rainfall event with allowance for 40% climate change in any part of a building;

A copy of the proposed surface water drainage design calculations can be found at appendix 06. These confirm that the design has been formulated to ensure that there be no flooding during the critical 1 in 100 year rainfall event with allowance for 40% climate change.

4.7 *Assessment of overland flow routes for extreme events that is diverted away from buildings (including basements). Overland flow routes need to be designed to convey the flood water in a safe manner in the event of a blockage or exceedance of the proposed drainage system capacity including inlet structures. A layout with overland flow routes needs to be presented with appreciation of these overland flow routes with regards to the properties on site and adjacent properties off site.

Should the surface water drainage system be overcome during an extreme storm event, and thereby generate overland flows, these flows would leave the site via the lowest point of the site.

From a review of the proposed drainage layout drawing at appendix 05, it can be seen that the lowest part of the site is at its north west corner, where existing / proposed levels are around 46.100m AOD. By comparison, the ground floor level of the proposed building is to be 46.550m AOD and 46.700m AOD. Hence it is clear that the proposed building is not likely to be affected by flooding if the proposed drainage system were to be overcome during an extreme storm event.

Instead, exceedance flows would be emitted from the yard gully at the north west corner of the site. From where they would enter Chapeltown Street, which falls to the south west away from the site, and subsequently thereby enter the highway drainage system via the nearby road gully.

4.8 *Results of ground investigation carried out under Building Research Establishment Digest 365. Site investigations should be undertaken in locations and at proposed depths of the proposed infiltration devices. Proposal of the attenuation that is achieving half emptying time within 24 hours. If no ground investigations are possible or infiltration is not feasible on site, evidence of alternative surface water disposal routes (as follows) is required.

Extracts from the intrusive site investigation report can be found at appendix 04. From these it can be seen that the ground conditions at the site are predominantly made ground over stiff clay. As such, it is considered that the use of SuDS soakaway / infiltration techniques is not feasible in this instance.

4.9 *Where surface water is connected to the public sewer, agreement in principle from United Utilities is required that there is adequate spare capacity in the existing system taking future development requirements into account. An email of acceptance of proposed flows and / or new connection will suffice.

Agreement in principle to the drainage proposals has been confirmed by United Utilities, refer to their letter which can be found at appendix 07.

4.10 *Hydraulic calculation of the proposed drainage system;

A copy of the proposed surface water drainage calculations can be found at appendix 06.

4.11 *Construction details of flow control and SuDS elements.

Refer to the typical drainage detail drawings at appendix 08.

5.0 CONCLUSION

5.1 It is considered that the responses provided above, together with the information contained in the various appendices to this report, adequately address the issues raised in condition 10, and therefore this condition can be discharged by Manchester City Council as planning authority.

APPENDIX 01

Site location plan

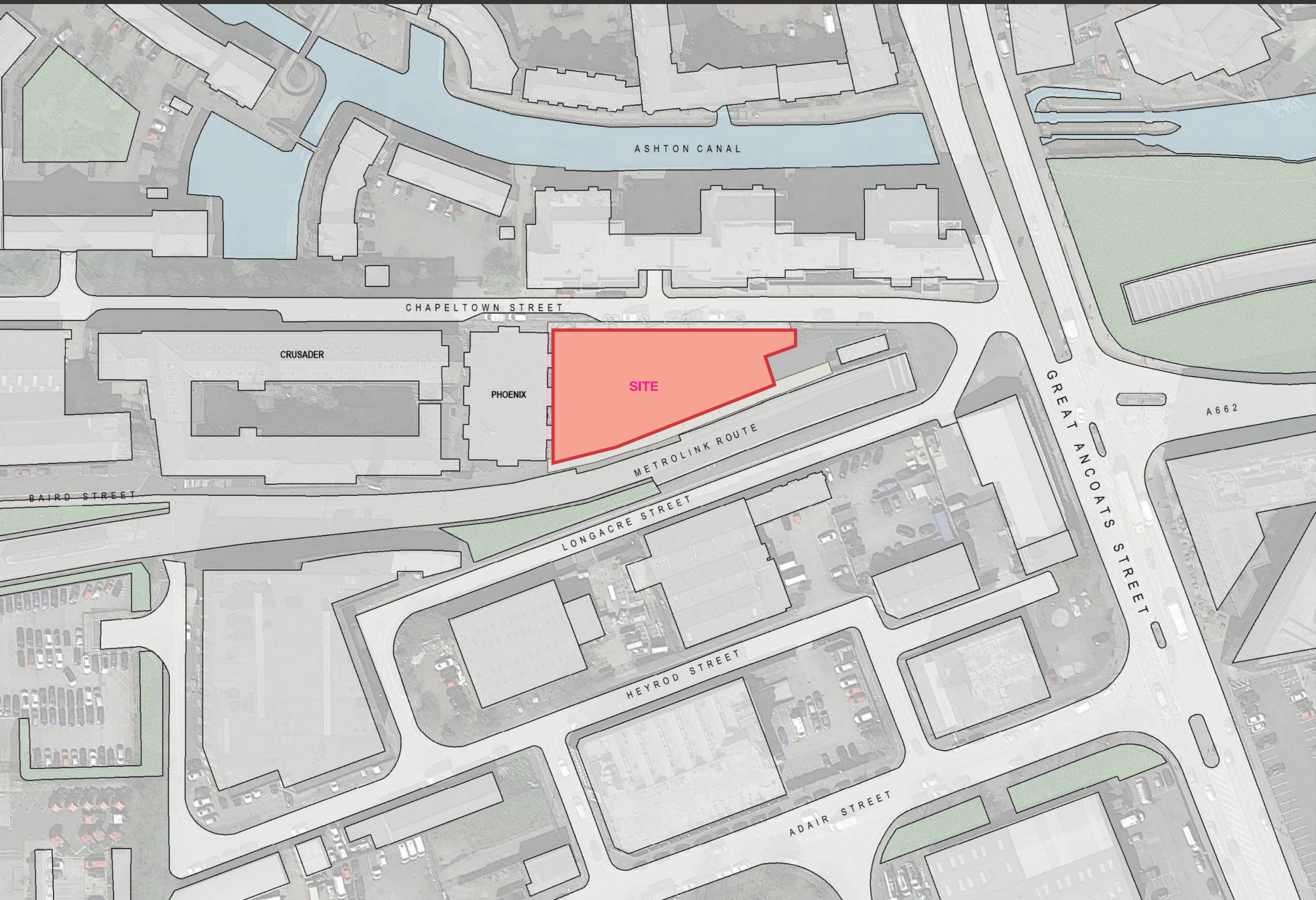
ASHTON CANAL
CHAPELTOWN STREET
CRUSADER
PHOENIX
SITE
METROLINK ROUTE
BAIRD STREET
LONGACRE STREET
HEYROD STREET
ADAIR STREET
GREAT ANCOATS STREET
A662

APPENDIX 02

Existing site layout plan

© Survey & Engineering Projects Ltd. 2021
Reproduction in whole or in part by any means is prohibited without the prior permission of Survey & Engineering Projects Ltd.
T. (0161) 728531 F. (0161) 725546 W. www.sepsurvey.com E. info@sepsurvey.com

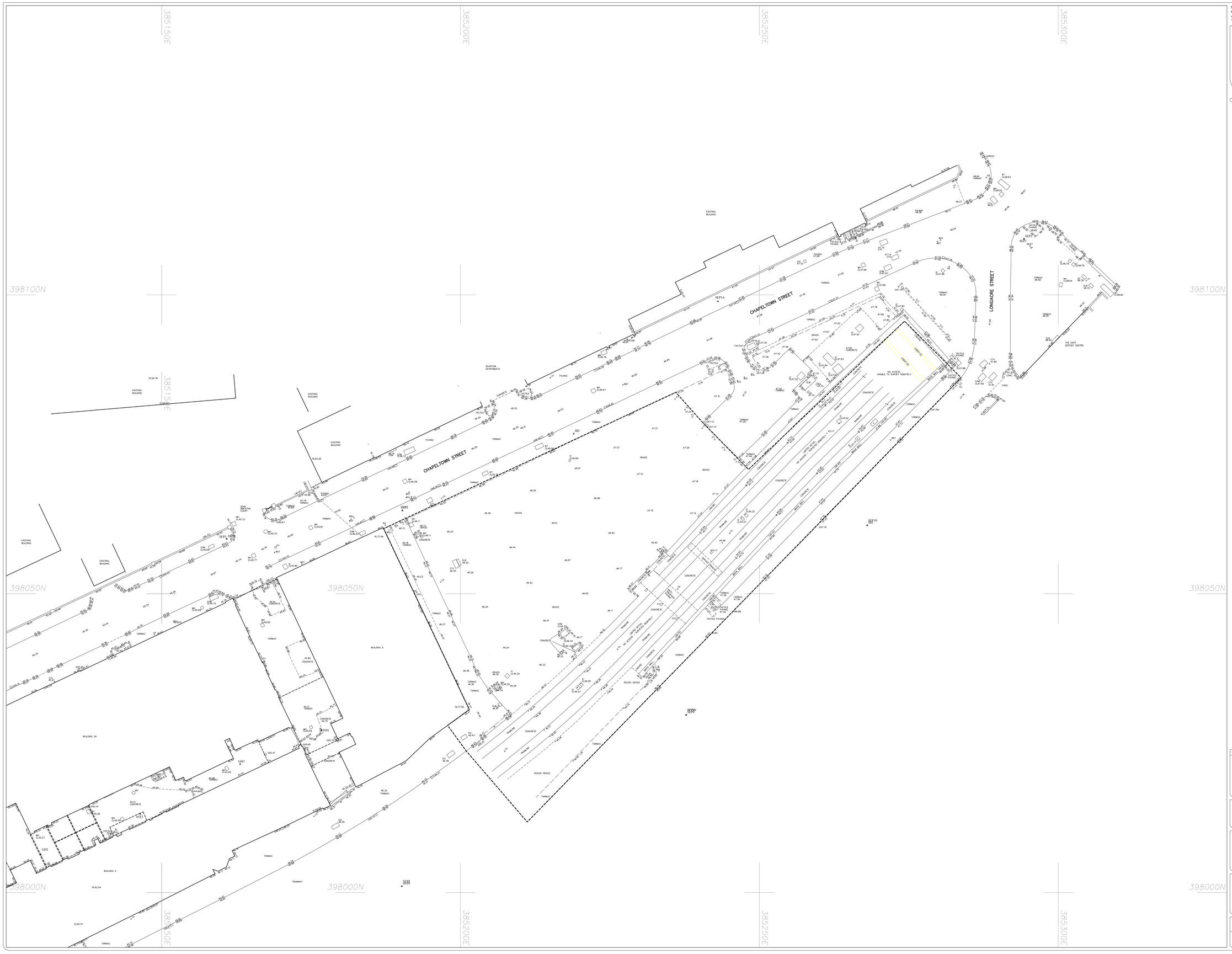

N

PLAN GRID NORTH

File name: S21645-T_30.dwg

LEGEND

AV	AIR VALVE	LBY	LITTERBUOY
BB	BELISHA BEACON	MH	MANHOLE
BH	BORE HOLE	MS	MILE STONE
BH	BORE HOLE	MS	MILE STONE
BM	BM	MP	MOORING POINT
BM	BENCH MARK	NP	NOTICE BOARD
BS	BUS STOP	OP	OUTFALL PIPE
BT	BT INSPECTION COVER	PB	POST OFFICE BOX
CB	CATCH BASIN	PI	PIER
CCTV	CCTV CAMERA POST	PP	PETROL PUMP
CH	CHAINAGE	PR	PROFILE
COM	COMMUNICATIONS COVER	RE	RODDING EYE
CP	CABLE PHONE STATION	RL	ROOF LEVEL
CTV	CABLE TV COVER	RL	ROOF LEVEL
DC	DRAINAGE CHANNEL	RTW	RETAINING WALL
DE	DRAIN EYE	SAP	SANITARY PIPE
DR	DRAIN	SAP	SAPLING
EIC	ELEC. INSPECTION COVER	SNP	NAME PLATE
EL	ELEVATION	SOF	SOFFIT LEVEL
ELB	ELECTRIC BOX	SOF	SOFFIT LEVEL
ER	EARTH ROD	SV	STOP VALVE
FB	FIBRE BOX / POLE	TB	TELEGRAPH BOLLARD
FL	FINISHED FLOOR LEVEL	TCB	TELEPHONE CALL BOX
FP	FLAG POLE	TL	TRAFFIC LIGHT
FP	FLAG POLE	TL	TRAFFIC LIGHT
G	GULLY	TLB	TRAFFIC LIGHT BOX
G.L.	GROUND LEVEL	TP	TARGET POLE
GP	GATE POST	TP	TELEGRAPH POLE
GR	GRATE	TP	TELEPHONE
GSV	GAS VALVE	WM	WATER METER
IC	INSPECTION COVER	WO	WASH OUT
IL	INVERT LEVEL	WST	WATER STOP TAP
KO	KERB OUTLET	WSV	WATER STOP VALVE
LAD	LADDER	DD.M	TREE GIRTH (Dia.)
LD	LAND DRAIN	WS	TREE MULTI-GIRTH
LP	LAMP POST		

PAL	PALISADE		DRIP LINE
R/W	RAIL/WATCH		ROOF RIDGE
R/W	RAIL/WATCH		AERIAL
C/W	CONC. WALL		CABLE
C/P	CONC PANEL		SURFACE CHANGE
P/W	POST AND WIRE		TOP
P/R	POST AND RAIL		TOP BANK
L/N	IRON RAIL		BOTTOM BANK
C/L	CHAIN LINK		BUILDING
C/L	CHAIN LINK		BUILDING CANOPY
[34.28]	TOP OF FEATURE		OVER HEAD ELECTRICAL
[34.28]	TOP		OVER HEAD TELECOM
ST	STATION		
BH	BOREHOLE		HEDGE
	BATTER		

NOTES:

All levels relate to O.S. (Newlyn) Datum. Established using network RTK.
Survey plotted on a plane local grid, orientated to National Grid.

SURVEY STATIONS			
Name	Easting	Northing	Height
SEP1	385206.276	398106.365	48.645
SEP2	385180.278	398063.920	48.117
SEP3	385151.613	398025.805	44.577
SEP4	385073.810	398018.805	44.693
SEP5	385032.485	397988.734	44.271
SEP6	385215.252	397964.261	45.487
SEP7	385125.252	397964.261	45.487
SEP8	385180.185	398001.064	48.228
SEP9	385188.037	398000.428	47.960
SEP10	385188.037	398000.428	47.960

0 2m 4m 8m 12m 16m
SCALE BAR

REV	DATE	DESCRIPTION

SURVEY & ENGINEERING PROJECTS

Client
CINNS Limited
Alpha House
4 Greek Street
Stockport
Cheshire
SK3 8AB

Project Title
Topographical Survey of Land At:
Chapeltown Street
Manchester
M1 2BJ

Surveyed	Drawn	Checked
I.Brynning	C.Holland	R.Critchley

Scale	Date	Drawing Ref.	No.	Size	Rev
1:200	May 21	S21645-T	01	A0	--

APPENDIX 03

Proposed development layout plan

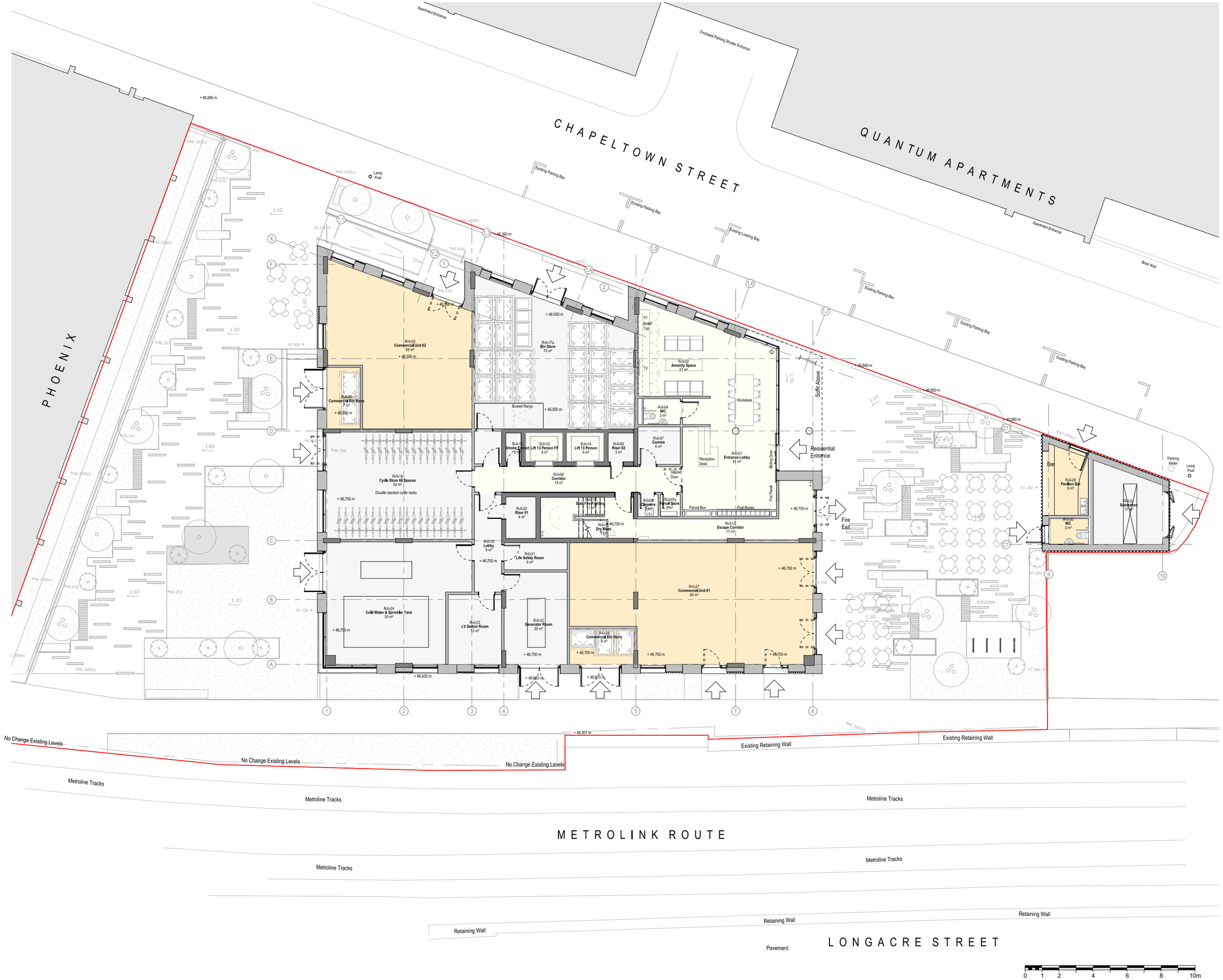

BUILDING DESIGN PARTNERSHIP SHALL HAVE NO RESPONSIBILITY FOR ANY USE MADE OF THIS DOCUMENT OTHER THAN FOR THAT WHICH IT WAS PREPARED AND ISSUED.

ALL DIMENSIONS SHOULD BE CHECKED ON SITE.

DO NOT SCALE FROM THIS DRAWING

ANY DRAWING ERRORS OR DIVERGENCIES SHOULD BE BROUGHT TO THE ATTENTION OF BUILDING DESIGN PARTNERSHIP AT THE ADDRESS SHOWN BELOW.

DRAWINGS SHALL BE READ IN CONJUNCTION WITH THE FOLLOWING BEFORE WORK COMMENCES:
- THE CDM DESIGN ISSUES REGISTER
- THE BDP RISK SERIES OF DRAWINGS
- THE PROJECT CDM RISK REGISTER

Notes

REVISION	DESCRIPTION	DRAWN / CHECKED	DATE
P11	RIBA Stage 3 VE Updates	JS/MB	27.05.22
P10	RIBA Stage 3 Updates	JS/MB	01.04.22

KEYPLAN

CLIENT

CAPITAL&CENTRIC

BDP.

11 Ducie Street
PO Box 85
Piccadilly Basin
Manchester
M60 3JA
United Kingdom

T +44 [0]161 828 2200
www.bdp.com

PROJECT TITLE
Ferrous

BDP JOB NUMBER
P3001911

DRAWING TITLE
GA Plan - Level 00 Ground Floor

SCALE @ A1
1 : 100

DATE FIRST ISSUED
21.04.21

DRAWING No.
BDP-FRS-XX-00-DR-A-200211

REVISION
P11

C:\REVIT_LOCAL\2020\FRS-BDP-XX-ZZ-M3-A-000002_Building Model_ja43930.rvt

APPENDIX 04

Extracts from the Phase 2 site investigation report

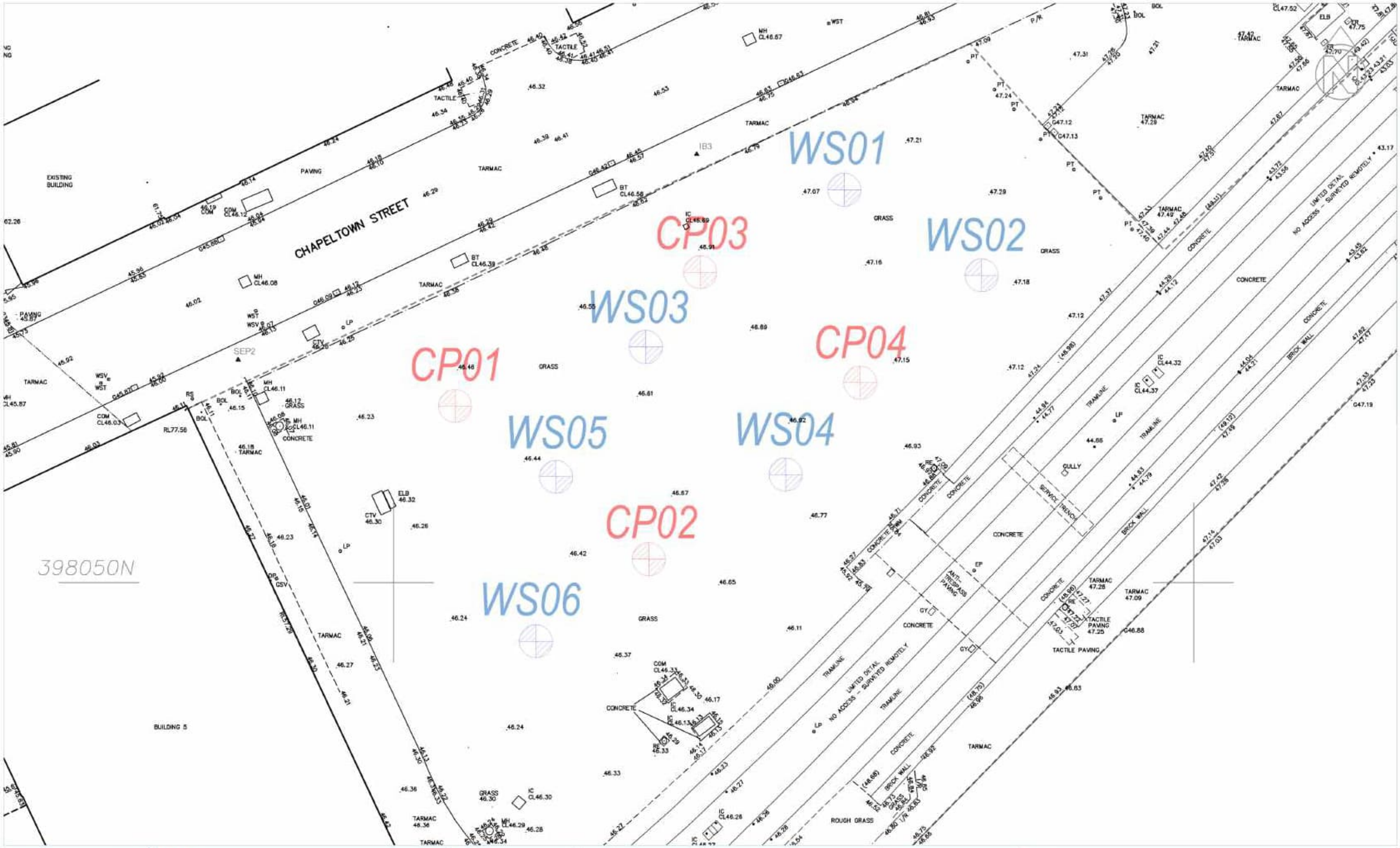

GROUNDTECH CONSULTING

CLIENT	DATE
WML CONSULTING	NOVEMBER 2022
PROJECT TITLE	**SCALE**
FERROUS PHASE II	NTS
PLAN TITLE	**PLAN NUMBER**
EXPLORATORY HOLE LOCATION PLAN	GRO-21454-P02

Rev.	Details	Date

Status	
Preliminary	
Draft	
Issued	●
For Comment	
Approved	

Notes

Cable Percussion Borehole

Windowless Sample Borehole

Borehole Log

GROUNDTECH CONSULTING

Borehole No. **WS01**

Sheet 1 of 1

Project Name: FERROUS PHASE II	Project No. GRO-21454	Co-ords: 398073.80 - 385226.40	Hole Type WS
Location: MANCHESTER		Level: 46.88	Scale 1:25
Client: WML CONSULTING LTD		Dates: 13/09/2022 - 13/09/2022	Logged By LH

Well	Water Strikes	Samples and In Situ Testing: Depth (m)	Type	Results	Depth (m)	Level (m)	Legend	Stratum Description
		0.10	ES					MADE GROUND: Dark brown slightly clayey slightly gravelly topsoil. Gravel is angular to subangular fine to coarse of mixed lithologies including brick and ceramics.
					0.30	46.58		MADE GROUND: Light grey sandy angular to subangular fine to coarse gravel of mixed lithologies including brick and concrete and low cobble content of concrete. Sand is fine to medium grains.
		0.50	D					
		0.50	ES					
		1.00	D					
		1.00	ES					
		1.20		N=50 (25 for 5mm/50 for 10mm)				
					1.45	45.43		End of borehole at 1.45 m

1 2 3 4 5

Remarks

1. Location scanned with CAT prior to breaking ground. 2. Hand dug inspection pit to 1.2m bgl. 3. No groundwater encountered. 4. Hole terminated due to SPT refusal on concrete obstruction. 5. Backfilled with arisings.

Borehole Log

GROUNDTECH CONSULTING

Borehole No. **WS02**

Sheet 1 of 1

Project Name: FERROUS PHASE II	Project No. GRO-21454	Co-ords: 398070.30 - 385238.30	Hole Type WS
Location: MANCHESTER		Level: 47.15	Scale 1:25
Client: WML CONSULTING LTD		Dates: 13/09/2022 - 13/09/2022	Logged By LH

Well	Water Strikes	Samples and In Situ Testing: Depth (m)	Type	Results	Depth (m)	Level (m)	Legend	Stratum Description
		0.15	ES		0.10	47.05		MADE GROUND: Dark brown slightly clayey slightly gravelly topsoil. Gravel is angular to subangular fine to coarse of mixed lithologies including brick and ceramics.
		0.50	ES		0.40	46.75		MADE GROUND: Grey brown gravelly fine to medium sand. Gravel is angular to subangular fine to coarse of mixed lithologies including brick, ceramics and metal.
		1.00	ES					MADE GROUND: Soft to firm brown slightly sandy gravelly clay locally ashy. Gravel is angular to subangular fine to coarse of mixed lithologies including brick, clinker, and ceramics. Sand is fine to medium grains.
		1.20		N=7 (1,0/1,2,2,2)	1.10	46.05		Stiff dark brown mottled grey slightly gravelly silty CLAY. Gravel is subangular to subrounded fine to coarse of mixed lithologies including chert.
		1.40	ES					
		1.50	D					
		2.00	D					
		2.00		N=50 (5,8/50 for 245mm)				
					2.45	44.70		End of borehole at 2.45 m

1 2 3 4 5

Remarks

1. Location scanned with CAT prior to breaking ground. 2. Hand dug inspection pit to 1.2m bgl. 3. No groundwater encountered. 4. Hole terminated due to SPT refusal. 5. Monitoring standpipe installed to 2.0m bgl (1.0m plain, 1.0m slotted).

Borehole Log

GROUNDTECH CONSULTING

Borehole No. **WS03**

Sheet 1 of 1

Project Name: FERROUS PHASE II	Project No. GRO-21454	Co-ords: -	Hole Type WS
Location: MANCHESTER		Level:	Scale 1:25
Client: WML CONSULTING LTD		Dates: 13/09/2022 - 13/09/2022	Logged By LH

Well	Water Strikes	Samples and In Situ Testing: Depth (m)	Type	Results	Depth (m)	Level (m)	Legend	Stratum Description
		0.10	ES		0.20			MADE GROUND: Dark brown slightly clayey slightly gravelly topsoil. Gravel is angular to subangular fine to coarse of mixed lithologies including brick, concrete and ceramics.
		0.50	ES		0.40			MADE GROUND: Brown slightly clayey gravelly fine to medium sand. Gravel is angular to subangular fine to coarse of mixed lithologies including brick, ceramics, concrete, plastic, slate and rare metal.
		1.00	D		0.80			MADE GROUND: Black slightly gravelly ashy fine to medium sand. Gravel is angular to subangular fine to medium of mixed lithologies including clinker, ironstone and ceramics.
		1.00	ES		1.00			MADE GROUND: Brown slightly clayey gravelly fine to medium sand. Gravel is angular to rounded fine to coarse of mixed lithologies including ceramics and concrete.
		1.20		N=30 (7,7/8,9,6,7)				Stiff dark brown mottled grey slightly gravelly silty CLAY. Gravel is subangular to subrounded fine to coarse of mixed lithologies including chert.
		1.50	D					
		1.80		N=50 (6,8/50 for 235mm)				
					2.00			End of borehole at 2.00 m

1 2 3 4 5

Remarks

1. Location scanned with CAT prior to breaking ground. 2. Hand dug inspection pit to 1.2m bgl. 3. No groundwater encountered. 4. Hole terminated due to SPT refusal. 5. Monitoring standpipe installed to 2.0m bgl (0.5m plain, 1.5m slotted).

Borehole Log

GROUNDTECH CONSULTING

Borehole No. **WS04**

Sheet 1 of 1

Project Name: FERROUS PHASE II	Project No. GRO-21454	Co-ords: 398053.90 - 385224.50	Hole Type WS
Location: MANCHESTER		Level: 46.60	Scale 1:25
Client: WML CONSULTING LTD		Dates: 13/09/2022 - 13/09/2022	Logged By LH

Well	Water Strikes	Samples and In Situ Testing: Depth (m)	Type	Results	Depth (m)	Level (m)	Legend	Stratum Description
					0.10	46.50		MADE GROUND: Dark brown slightly clayey slightly gravelly topsoil. Gravel is angular to subangular fine to coarse of mixed lithologies including brick and ceramics.
		0.50	ES					MADE GROUND: Brown slightly clayey gravelly fine to medium sand. Gravel is angular to subangular fine to coarse of mixed lithologies including brick, ceramics, concrete, plastic and rare metal.
		1.00	ES					
					1.10	45.50		Stiff dark brown mottled grey slightly gravelly silty CLAY. Gravel is subangular to subrounded fine to coarse of mixed lithologies including chert.
		1.20		N=18 (3,3/4,4,4,6)				
		1.50	D					
		2.00	D					
		2.00		N=50 (6,8/50 for 240mm)				
					2.45	44.15		End of borehole at 2.45 m

1 2 3 4 5

Remarks

1. Location scanned with CAT prior to breaking ground. 1. Hand dug inspection pit to 1.2m bgl. 2. No groundwater encountered. 3. Hole terminated due to SPT refusal. 4. Backfilled with arisings.

Borehole Log

GROUNDTECH CONSULTING

Borehole No. **WS05**

Sheet 1 of 1

Project Name: FERROUS PHASE II	Project No. GRO-21454	Co-ords: 398057.60 - 385210.70	Hole Type WS
Location: MANCHESTER		Level: 46.38	Scale 1:25
Client: WML CONSULTING LTD		Dates: 13/09/2022 - 13/09/2022	Logged By LH

Well	Water Strikes	Samples and In Situ Testing: Depth (m)	Type	Results	Depth (m)	Level (m)	Legend	Stratum Description	
					0.20	46.18		MADE GROUND: Dark brown slightly clayey slightly gravelly topsoil. Gravel is angular to subangular fine to coarse of mixed lithologies including brick, concrete and ceramics.	
		0.50	ES					MADE GROUND: Brown slightly clayey gravelly fine to medium sand. Gravel is angular to rounded fine to coarse of mixed lithologies including brick, ceramics, concrete, plastic, slate and rare metal.	
		0.60	ES		0.55	45.83			
					0.70	45.68		MADE GROUND: Black fine to medium sand.	
					0.95	45.43		MADE GROUND: Red brown slightly clayey gravelly fine to medium sand. Gravel is angular to rounded fine to coarse of mixed lithologies including brick, ceramics and concrete.	1
		1.00	D					Stiff dark brown mottled grey slightly gravelly silty CLAY. Gravel is subangular to subrounded fine to coarse of mixed lithologies including chert.	
		1.00	ES						
		1.20		N=33 (3,4/6,7,9,11)					
		1.80		N=50 (6,7/50 for 240mm)					
		2.00	D		2.00	44.38		End of borehole at 2.00 m	2
									3
									4
									5

Remarks

1. Location scanned with CAT prior to breaking ground. 2. Hand dug inspection pit to 1.2m bgl. 3. No groundwater encountered. 4. Hole terminated due to SPT refusal. 5. Backfilled with arisings.

Borehole Log

GROUNDTECH CONSULTING

Borehole No. **WS06**

Sheet 1 of 1

Project Name: FERROUS PHASE II	Project No. GRO-21454	Co-ords: 398046.20 - 385214.60	Hole Type WS
Location: MANCHESTER		Level: 46.44	Scale 1:25
Client: WML CONSULTING LTD		Dates: 13/09/2022 - 13/09/2022	Logged By LH

Well	Water Strikes	Samples and In Situ Testing: Depth (m)	Type	Results	Depth (m)	Level (m)	Legend	Stratum Description
					0.15	46.29		MADE GROUND: Dark brown slightly clayey slightly gravelly topsoil. Gravel is angular to subangular fine to coarse of mixed lithologies including brick.
		0.30	ES					MADE GROUND: Brown slightly clayey gravelly fine to medium sand. Gravel is angular to subangular fine to coarse of mixed lithologies including brick, ceramics, concrete, plastic and rare metal.
		0.60	ES		0.50	45.94		MADE GROUND: Black fine to medium sand.
		1.00	D		1.00	45.44		Stiff dark brown mottled grey slightly gravelly silty CLAY. Gravel is subangular to subrounded fine to coarse of mixed lithologies including chert.
		1.20		N=25 (4,4/5,6,7,7)				
		1.50	D					
		1.80		N=49 (5,8/49 for 240mm)				
					2.00	44.44		End of borehole at 2.00 m

Remarks

1. Location scanned with CAT prior to breaking ground. 2. Hand dug inspection pit to 1.2m bgl. 3. No groundwater encountered. 4. Hole terminated due to refusal. 5. Monitoring standpipe installed to 2.0m bgl (1.0m plain, 1.0m slotted).

APPENDIX 05

Proposed drainage layout plan

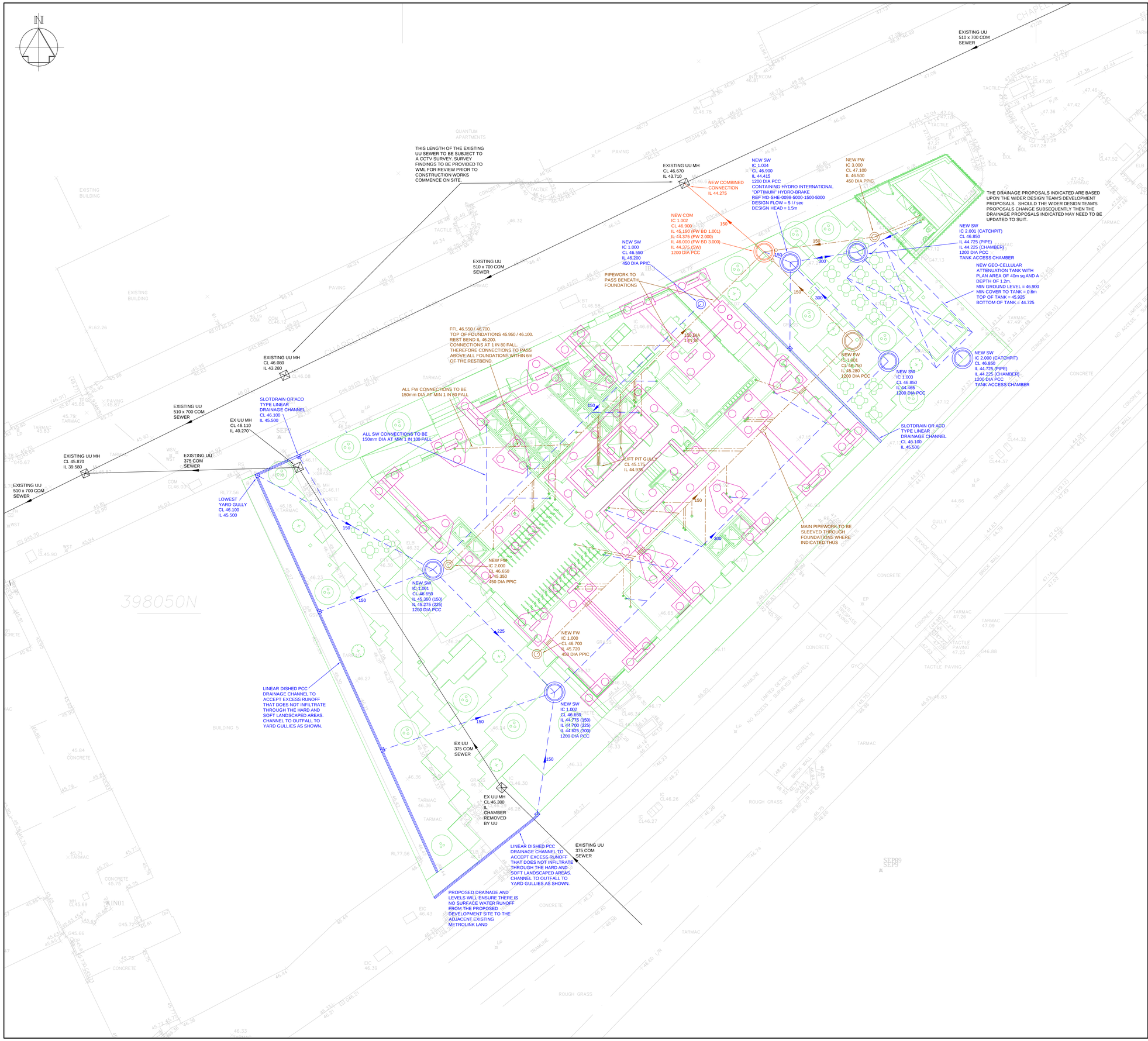

SURFACE WATER DRAINAGE STRATEGY

THE PROPOSED DEVELOPMENT IS TO BE DRAINED VIA SEPARATE FOUL AND SURFACE WATER DRAINAGE SYSTEMS.

THE SURFACE WATER DRAINAGE PROPOSALS HAVE BEEN DESIGNED IN ACCORDANCE WITH BS EN 752-4 AND THE BUILDING REGULATIONS APPROVED DOCUMENT H (2010), WHICH INDICATES THE FOLLOWING HIERARCHY FOR THE DISPOSAL OF SURFACE WATER DRAINAGE FROM DEVELOPMENT SITES:-

1. DISCHARGE VIA INFILTRATION;
2. DISCHARGE TO WATERCOURSE;
3. DISCHARGE TO SEWER.

THESE OPTIONS ARE DISCUSSED IN FURTHER DETAIL BELOW.

SURFACE WATER DISCHARGE VIA INFILTRATION
RECENT SITE INVESTIGATION WORKS HAVE CONFIRMED THAT THE GROUND CONDITIONS AT THE SITE ARE NOT PARTICULARLY SUITED TO THE USE OF INFILTRATION / SOAKAWAY TECHNIQUES.

SURFACE WATER DISCHARGE VIA WATERCOURSE
THERE ARE NO EXISTING WATERCOURSES WITHIN OR IN THE VICNITY OF THE SITE, HENCE IT WILL NOT BE POSSIBLE TO DISCHARGE THE SURFACE WATER RUNOFF FROM THE PROPOSED DEVELOPMENT TO AN EXISTING WATERCOURSE.

SURFACE DISCHARGE VIA THE PUBLIC SEWERAGE SYSTEM
GIVEN THE ABOVE IT WILL BE NECESSARY TO DISCHARGE THE SURFACE WATER RUNOFF FROM THE PROPOSED DEVELOPMENT TO THE PUBLIC DRAINAGE SYSTEM, AS THE EXISTING SITE DOES.

PROPOSED SURFACE WATER DISCHARGE RATE

THE EXISTING SITE IS CONSIDERED TO BE "GREENFIELD" IN TERMS OF SURFACE WATER RUNOFF. HENCE THE GENERALLY ACCEPTED PRACTICAL MINIMUM DISCHARGE RATE OF 5 l / / sec HAS BEEN UTILISED IN THE DESIGN.

THIS ALLOWABLE DISCHARGE RATE SHOULD NOT BE EXCEEDED FOR ALL STORM EVENTS UP TO AND INCLUDING THE CRITICAL 1 IN 100 YEAR EVENT INCLUDING A 40% CLIMATE CHANGE ALLOWANCE.

WHILST THE GROUND CONDITIONS AT THE SITE ARE NOT PARTICULARLY SUITED TO THE USE OF INFILTRATION / SOAKAWAY TECHNIQUES, IT IS PROPOSED TO UTILISE POROUS SURFACING TO HARD LANDSCAPED AREAS AND ALSO ACHEIVE SOME INFILTRATION VIA THE SOFT LANDSCAPED AREAS. ANY EXCESS RUNOFF FROM THESE AREAS WILL BE COLLECTED BY THE LINEAR DRAINAGE CHANNELS SHOWN AND DISCHARGED VIA THE BELOW GROUND SURFACE WATER DRAINAGE SYSTEM.

TO ENSURE THAT THE ALLOWABLE DISCHARGE RATE IS NOT EXCEEDED, A HYDRO-BRAKE FLOW CONTROL DEVICE WILL BE EMPLOYED AT THE DOWNSTREAM END OF THE PROPOSED DRAINAGE SYSTEM, WITH ATTENUATION STORAGE PROVIDED IN A BELOW GROUND GEO-CELLULAR TANK.

IN LINE WITH MODERN DESIGN STANDARDS FOR SURFACE WATER DRAINAGE SYSTEMS, THE PROPOSALS SHOWN HAVE BEEN FORMULATED TO ENSURE THERE WILL BE:-

1. NO SURCHARGING OF SEWERS FOR THE CRITICAL 1 IN 1 YEAR STORM EVENT.
2. NO SURFACE FLOODING FOR THE CRITICAL 1 IN 30 YEAR EVENT.
3. NO SURFACE FLOODING THAT MAY AFFECT BUILDINGS ON OR OFF SITE FOR THE CRITICAL 1 IN 100 YEAR EVENT INCLUDING A 40% CLIMATE CHANGE ALLOWANCE.

GENERAL NOTES

DO NOT SCALE FROM THIS DRAWING WORK TO FIGURED DIMENSIONS ONLY.

NO DEVIATION FROM THE DETAILS SHOWN ON THIS DRAWING IS ALLOWED WITHOUT PRIOR PERMISSION IN WRITING.

ALL DRAWINGS ARE TO BE READ IN CONJUNCTION WITH ALL ARCHITECTS, ENGINEERS AND SPECIALISTS DRAWINGS AND THE SPECIFICATION.

THE CONTRACTOR SHALL INCORPORATE ALL THE REQUIREMENTS OF THE PRE-TENDER STAGE HEALTH AND SAFETY PLAN.

FOR DETAILS OF MATERIALS AND WORKMANSHIP REFER TO THE SPECIFICATION.

THE CONTRACTOR IS RESPONSIBLE FOR CHECKING INVERT LEVELS AND POSITIONS OF ALL EXISTING DRAINS, SEWERS, INSPECTION CHAMBERS AND MANHOLES SHOWN ON THIS DRAWING IMMEDIATELY ON SITE ESTABLISHMENT. ANY DISCREPANCIES MUST BE REPORTED TO WML CONSULTING IMMEDIATELY.

WHERE THE NEW SITE DRAINAGE CONNECTS IN TO EXISTING MANHOLES IN CARRIAGEWAYS AND / OR EXISTING ADOPTED SEWERS, THE CONTRACTOR IS RESPONSIBLE FOR ALL LIAISON WITH THE RELEVANT STATUTORY UNDERTAKER AND LOCAL AUTHORITY WITH REGARD TO ROAD CLOSURES, TRAFFIC MANAGEMENT, PERMITS TO WORK, SUBMISSION OF CONTRACTORS METHOD STATEMENTS AND RISK ASSESSMENTS AND OTHER DOCUMENTATION AND CORRESPONDENCE ASSOCIATED WITH THE SITE STAGE (PART 2) ELEMENT OF THE WORKS.

ROCKER PIPES TO BE PROVIDED AT ALL CONCRETE CASED INTERFACES.

PROVIDE ADEQUATE PROTECTION TO MAINTAIN MINIMUM COVER TO DRAINS DURING THE CONSTRUCTION PERIOD.

COVER LEVELS ON THIS DRAWING ARE APPROXIMATE AND INDICATIVE ONLY ARCHITECT TO CONFIRM COVER LEVELS TO ALL MANHOLES AND GULLIES PRIOR TO CONSTRUCTION.

THE LAYOUT OF DRAINAGE ON THIS DRAWING IS INDICATIVE ONLY ARCHITECT TO CONFIRM EXACT LOCATION OF MANHOLES AND GULLIES.

U.N.O. ALL DRAINAGE GOODS & FITTINGS TO BE:-

UPTO 225 DIA (AND INCLUDING) TO BE SUPERSLEVE VITRIFIED CLAY PIPES OR SIMILAR.

300 DIA AND ABOVE TO BE CONCRETE BY STANTON BONNA OR SIMILAR.

ALL COVERS AND RODDING ACCESS POINTS TO BE SEALED AND SCREWED TIGHT.

ALL INTERNAL MANHOLE COVERS TO BE DOUBLE SEALED, LOCKABLE AND RECESSED TO ACCEPT FLOOR FINISHES WHERE APPLICABLE.

SETTING OUT OF ALL INTERNAL GULLY / PLUMBING CONNECTIONS TO BE CO-ORDINATED BETWEEN THE SERVICE ENGINEERS AND THE ARCHITECT.

ALL INTERNAL GULLIES, PLUMBING CONNECTIONS, SOIL STACKS, SVPS AND ALL OTHER CONNECTIONS OF FOUL AND SURFACE WATER DRAINS TO BELOW GROUND TO BE FITTED WITH ACCESSIBLE RODDING POINTS ABOVE SLAB LEVEL.

ALL SURFACE WATER CONNECTIONS TO BE 100mm DIAMETER AT MINIMUM FALLS OF 1:60 UNLESS NOTED OTHERWISE.

ALL FOUL WATER CONNECTIONS TO BE 100mm DIAMETER AT MINIMUM FALLS OF 1:40 UNLESS NOTED OTHERWISE.

ALL CONNECTIONS TO BE MADE IN ACCORDANCE WITH STANDARD DETAIL DRAWINGS.

ALL PIPEWORK TO BE INSTALLED WITH SOFFITS LEVEL (E.G. AT CHANGES IN PIPE SIZE) U.N.O.

ON COMPLETION OF DRAINAGE WORKS, THE NEW DRAINAGE SYSTEM IS TO BE THOROUGHLY CLEANED AND A CCTV SURVEY CARRIED OUT TO CONFIRM NO CONSTRUCTION DEBRIS OR BLOCKAGES REMAIN.

CONNECTIONS TO CARRIER DRAINS ARE TO BE 'Y' JUNCTIONS.

ALL PRIVATE DRAINAGE IS TO COMPLY WITH BS EN 752 AND BUILDING REGS. PART H.

MANHOLE COVERS IN VEHICULAR AREAS TO BE EN124 CLASS D400, IN NON - VEHICULAR AREAS TO BE EN124 CLASS C250

MAINTENANCE OF THE BELOW GROUND DRAINAGE SYSTEM

THE SURFACE WATER DRAINAGE PROPOSALS INDICATED ARE RELATIVELY TRADITIONAL IN NATURE, AND SHOULD PROVIDE YEARS OF RELATIVELY LOW MAINTENANCE OPERATION IN RELATION TO THE ANTICIPATED LIFESPAN OF THE PROPOSED DEVELOPMENT.

IN LINE WITH CURRENT GOOD PRACTICE:-

- GULLIES AND LINEAR DRAINAGE CHANNELS SHOULD BE INSPECTED AND / OR CLEANED OUT AT 6 MONTHLY INTERVALS.
- INSPECTION CHAMBERS, MANHOLES, CATCHPITS, ETC. SHOULD BE INSPECTED AT 6 MONTHLY INTERVALS TO ENSURE THAT THE PIPEWORK ASSOCIATED WITH THEM ARE OPERATING EFFECTIVELY.
- ANY PROBLEMS HIGHLIGHTED BY THESE INSPECTIONS WILL NEED TO BE INVESTIGATED, POSSIBLY BY CCTV SURVEY. TO CONFIRM THE NATURE OF THE PROBLEM AND TO ALLOW IT TO BE REMEDIED IN A TIMELY MANNER. IT IS UNDERSTOOD THAT THE MONITORING AND ROUTINE MAINTENANCE OF THE BELOW GROUND DRAINAGE SYSTEM WILL BE CARRIED OUT BY THE BUILDING OWNERS MAINTENANCE STAFF WITH ADDITIONAL HELP PROVIDED BY EXTERNAL SPECIALIST DRAINAGE PROFESSIONALS BROUGHT IN AS REQUIRED.

CONSTRUCTION

NOTE THAT THE DRAINAGE PROPOSALS SHOWN ARE SUBJECT TO THE APPROVAL OF THE LOCAL PLANNING AUTHORITY AND UNITED UTILITIES.

Rev.	Amendment	Date	By	Chkd
C02	AMENDED TO SUIT C&C COMMENT OF 26.01.2023.	27.01.23	KPT	AW
C01	CONSTRUCTION ISSUE.	19.01.23	KPT	AW
T03	AMENDED TO SUIT REVISED POP-UPS.	26.05.22	KPT	AW
T02	AMENDED TO SUIT REVISED POP-UPS.	08.04.22	KPT	AW
T01	TENDER ISSUE.	18.03.22	KPT	AW
P02	AMENDED TO SUIT NEW EXTERNAL LAYOUT.	22.02.22	KPT	AW
P01	PRELIMINARY ISSUE.	07.10.21	KPT	AW

Project
FERROUS

Client
CAPITAL & CENTRIC

Title
PROPOSED DRAINAGE LAYOUT

WML Job No.	Drawn	Checked	Date	Scale
9861	KPT	AW	OCT. 2021	1:100 AT A0

WML CONSULTING
Civil, Structural & Geotechnical Engineers
No.8 Oak Green
Earl Road
Stanley Green Business Park
Cheadle Hulme
Cheshire SK8 6QL
Tel 0161 482 0600
Fax 0161 486 9210
e-mail info@wmlconsulting.com
www.wmlconsulting.com

Drawing No.

Project	Originator	Volume	Level	Type	Role	Number	Rev
9861	WML	00	XX	DR	C	1001	C02

APPENDIX 06

Surface water drainage calculations

STORM SEWER DESIGN by the Modified Rational Method

Design Criteria for Storm

Pipe Sizes STANDARD Manhole Sizes STANDARD

FSR Rainfall Model - England and Wales

Return Period (years)	100	Add Flow / Climate Change (%)	0
M5-60 (mm)	18.000	Minimum Backdrop Height (m)	0.000
Ratio R	0.360	Maximum Backdrop Height (m)	0.000
Maximum Rainfall (mm/hr)	20	Min Design Depth for Optimisation (m)	0.000
Maximum Time of Concentration (mins)	30	Min Vel for Auto Design only (m/s)	1.00
Foul Sewage (l/s/ha)	0.000	Min Slope for Optimisation (1:X)	500
Volumetric Runoff Coeff.	0.750		

Designed with Level Soffits

Time Area Diagram for Storm

Time (mins)	Area (ha)	Time (mins)	Area (ha)
0-4	0.127	4-8	0.043

Total Area Contributing (ha) = 0.170

Total Pipe Volume (m³) = 4.409

Network Design Table for Storm

PN	Length (m)	Fall (m)	Slope (1:X)	I.Area (ha)	T.E. (mins)	Base Flow (l/s)	k (mm)	HYD SECT	DIA (mm)	Auto Design
1.000	32.000	0.850	37.6	0.050	5.00	0.0	0.600	o	150	
1.001	14.000	0.575	24.3	0.050	0.00	0.0	0.600	o	225	
1.002	35.000	0.150	233.3	0.050	0.00	0.0	0.600	o	300	
1.003	11.000	0.050	220.0	0.020	0.00	0.0	0.600	o	300	
1.004	2.000	0.050	40.0	0.000	0.00	0.0	0.600	o	150	

Network Results Table

PN	Rain (mm/hr)	T.C. (mins)	US/IL (m)	Σ I.Area (ha)	Σ Base Flow (l/s)	Foul (l/s)	Add Flow (l/s)	Vel (m/s)	Cap (l/s)	Flow (l/s)
1.000	20.00	5.32	46.200	0.050	0.0	0.0	0.0	1.65	29.1	2.7
1.001	20.00	5.41	45.275	0.100	0.0	0.0	0.0	2.66	105.9	5.4
1.002	20.00	5.98	44.625	0.150	0.0	0.0	0.0	1.02	72.5	8.1
1.003	20.00	6.15	44.475	0.170	0.0	0.0	0.0	1.06	74.6	9.2
1.004	20.00	6.18	44.425	0.170	0.0	0.0	0.0	1.60	28.2	9.2

©1982-2014 XP Solutions

Online Controls for Storm

Hydro-Brake Optimum® Manhole: 5, DS/PN: 1.004, Volume (m³): 3.1

Unit Reference	MD-SHE-0098-5000-1500-5000
Design Head (m)	1.500
Design Flow (l/s)	5.0
Flush-Flo™	User Defined
Objective	Minimise upstream storage
Diameter (mm)	98
Invert Level (m)	44.425
Minimum Outlet Pipe Diameter (mm)	150
Suggested Manhole Diameter (mm)	1200

Control Points	Head (m)	Flow (l/s)
Design Point (Calculated)	1.500	5.0
Flush-Flo™	0.431	4.9
Kick-Flo®	0.878	3.9
Mean Flow over Head Range	-	4.3

The hydrological calculations have been based on the Head/Discharge relationship for the Hydro-Brake Optimum® as specified. Should another type of control device other than a Hydro-Brake Optimum® be utilised then these storage routing calculations will be invalidated

Depth (m)	Flow (l/s)	Depth (m)	Flow (l/s)	Depth (m)	Flow (l/s)	Depth (m)	Flow (l/s)
0.100	3.2	1.200	4.5	3.000	6.9	7.000	10.3
0.200	4.4	1.400	4.8	3.500	7.4	7.500	10.7
0.300	4.8	1.600	5.1	4.000	7.9	8.000	11.0
0.400	4.9	1.800	5.4	4.500	8.4	8.500	11.3
0.500	4.9	2.000	5.7	5.000	8.8	9.000	11.6
0.600	4.8	2.200	6.0	5.500	9.2	9.500	11.9
0.800	4.3	2.400	6.2	6.000	9.6		
1.000	4.1	2.600	6.5	6.500	10.0		

©1982-2014 XP Solutions

Storage Structures for Storm

Tank or Pond Manhole: 5, DS/PN: 1.004

Invert Level (m) 44.725

Depth (m)	Area (m²)	Depth (m)	Area (m²)	Depth (m)	Area (m²)
0.000	40.0	1.200	40.0	1.201	0.0

©1982-2014 XP Solutions

1 year Return Period Summary of Critical Results by Maximum Level (Rank 1) for Storm

Simulation Criteria

Areal Reduction Factor 1.000 Additional Flow - % of Total Flow 0.000
Hot Start (mins) 0 MADD Factor * 10m³/ha Storage 2.000
Hot Start Level (mm) 0 Inlet Coeffiecient 0.800
Manhole Headloss Coeff (Global) 0.500 Flow per Person per Day (l/per/day) 0.000
Foul Sewage per hectare (l/s) 0.000

Number of Input Hydrographs 0 Number of Storage Structures 1
Number of Online Controls 1 Number of Time/Area Diagrams 0
Number of Offline Controls 0 Number of Real Time Controls 0

Synthetic Rainfall Details

Rainfall Model FSR Ratio R 0.360
Region England and Wales Cv (Summer) 0.750
M5-60 (mm) 18.000 Cv (Winter) 0.840

Margin for Flood Risk Warning (mm) 300.0 DVD Status OFF
Analysis Timestep Fine Inertia Status OFF
DTS Status ON

Profile(s) Summer and Winter
Duration(s) (mins) 15, 30, 60, 120, 180, 240, 360, 480, 600, 720, 960, 1440, 2160, 2880, 4320, 5760, 7200, 8640, 10080
Return Period(s) (years) 1, 30, 100
Climate Change (%) 0, 0, 40

PN	Storm	Return Period	Climate Change	First X Surcharge	First Y Flood	First Z Overflow	O/F Act.	Lvl Exc.
1.000	15 Winter	1	0%					
1.001	15 Winter	1	0%	100/15 Winter				
1.002	30 Winter	1	0%	30/15 Summer				
1.003	30 Winter	1	0%	1/15 Winter				
1.004	30 Winter	1	0%	1/15 Summer				

PN	US/MH Name	Water Level (m)	Surch'ed Depth (m)	Flooded Volume (m³)	Flow / Cap.	O'flow (l/s)	Pipe Flow (l/s)	Status
1.000	1	46.247	-0.103	0.000	0.21	0.0	5.9	OK
1.001	2	45.327	-0.173	0.000	0.12	0.0	11.0	OK
1.002	3	44.796	-0.129	0.000	0.20	0.0	13.0	OK
1.003	4	44.790	0.015	0.000	0.22	0.0	12.9	SURCHARGED
1.004	5	44.786	0.211	0.000	0.35	0.0	4.9	SURCHARGED

©1982-2014 XP Solutions

30 year Return Period Summary of Critical Results by Maximum Level (Rank 1) for Storm

Simulation Criteria

Areal Reduction Factor 1.000 Additional Flow - % of Total Flow 0.000
Hot Start (mins) 0 MADD Factor * 10m³/ha Storage 2.000
Hot Start Level (mm) 0 Inlet Coeffiecient 0.800
Manhole Headloss Coeff (Global) 0.500 Flow per Person per Day (l/per/day) 0.000
Foul Sewage per hectare (l/s) 0.000

Number of Input Hydrographs 0 Number of Storage Structures 1
Number of Online Controls 1 Number of Time/Area Diagrams 0
Number of Offline Controls 0 Number of Real Time Controls 0

Synthetic Rainfall Details

Rainfall Model FSR Ratio R 0.360
Region England and Wales Cv (Summer) 0.750
M5-60 (mm) 18.000 Cv (Winter) 0.840

Margin for Flood Risk Warning (mm) 300.0 DVD Status OFF
Analysis Timestep Fine Inertia Status OFF
DTS Status ON

Profile(s) Summer and Winter
Duration(s) (mins) 15, 30, 60, 120, 180, 240, 360, 480, 600, 720, 960, 1440, 2160, 2880, 4320, 5760, 7200, 8640, 10080
Return Period(s) (years) 1, 30, 100
Climate Change (%) 0, 0, 40

PN	Storm	Return Period	Climate Change	First X Surcharge	First Y Flood	First Z Overflow	O/F Act.	Lvl Exc.
1.000	15 Winter	30	0%					
1.001	15 Winter	30	0%	100/15 Winter				
1.002	60 Winter	30	0%	30/15 Summer				
1.003	60 Winter	30	0%	1/15 Winter				
1.004	60 Winter	30	0%	1/15 Summer				

PN	US/MH Name	Water Level (m)	Surch'ed Depth (m)	Flooded Volume (m³)	Flow / Cap.	O'flow (l/s)	Pipe Flow (l/s)	Status
1.000	1	46.278	-0.072	0.000	0.52	0.0	14.5	FLOOD RISK
1.001	2	45.364	-0.136	0.000	0.33	0.0	30.1	OK
1.002	3	45.192	0.267	0.000	0.33	0.0	22.1	SURCHARGED
1.003	4	45.187	0.412	0.000	0.41	0.0	24.5	SURCHARGED
1.004	5	45.184	0.609	0.000	0.35	0.0	4.9	SURCHARGED

©1982-2014 XP Solutions

100 year Return Period Summary of Critical Results by Maximum Level (Rank 1) for Storm

Simulation Criteria

Areal Reduction Factor 1.000 Additional Flow - % of Total Flow 0.000
Hot Start (mins) 0 MADD Factor * 10m³/ha Storage 2.000
Hot Start Level (mm) 0 Inlet Coeffiecient 0.800
Manhole Headloss Coeff (Global) 0.500 Flow per Person per Day (l/per/day) 0.000
Foul Sewage per hectare (l/s) 0.000

Number of Input Hydrographs 0 Number of Storage Structures 1
Number of Online Controls 1 Number of Time/Area Diagrams 0
Number of Offline Controls 0 Number of Real Time Controls 0

Synthetic Rainfall Details

Rainfall Model FSR Ratio R 0.360
Region England and Wales Cv (Summer) 0.750
M5-60 (mm) 18.000 Cv (Winter) 0.840

Margin for Flood Risk Warning (mm) 300.0 DVD Status OFF
Analysis Timestep Fine Inertia Status OFF
DTS Status ON

Profile(s) Summer and Winter
Duration(s) (mins) 15, 30, 60, 120, 180, 240, 360, 480, 600, 720, 960, 1440, 2160, 2880, 4320, 5760, 7200, 8640, 10080
Return Period(s) (years) 1, 30, 100
Climate Change (%) 0, 0, 40

PN	Storm	Return Period	Climate Change	First X Surcharge	First Y Flood	First Z Overflow	O/F Act.	Lvl Exc.
1.000	15 Winter	100	+40%					
1.001	120 Winter	100	+40%	100/15 Winter				
1.002	120 Winter	100	+40%	30/15 Summer				
1.003	120 Winter	100	+40%	1/15 Winter				
1.004	120 Winter	100	+40%	1/15 Summer				

PN	US/MH Name	Water Level (m)	Surch'ed Depth (m)	Flooded Volume (m³)	Flow / Cap.	O'flow (l/s)	Pipe Flow (l/s)	Status
1.000	1	46.317	-0.033	0.000	0.94	0.0	26.1	FLOOD RISK
1.001	2	45.923	0.423	0.000	0.19	0.0	17.9	SURCHARGED
1.002	3	45.918	0.993	0.000	0.38	0.0	25.2	SURCHARGED
1.003	4	45.912	1.137	0.000	0.47	0.0	27.9	SURCHARGED
1.004	5	45.908	1.333	0.000	0.35	0.0	5.0	SURCHARGED

©1982-2014 XP Solutions

TOTAL SITE AREA = 1,700m sq
CHAPELTOWN STREET
APARTMENTS
PAVING
CONCRETE
TACTILE
TARMAC
GRASS
ROUGH GRASS
BRICK WALL
TRAMLINE
SERVICE TRENCH
GULLY
TACTILE PAVING
ANTI-TRESPASS PAVING
LIMITED DETAIL
NO ACCESS - SURVEYED REMOTELY
BUILDING 5
SEP2
SEP09
RL77.56

APPENDIX 07

Letter from United Utilities

United Utilities Water Limited
Grasmere House
Lingley Mere Business Park
Lingley Green Avenue
Great Sankey
Warrington WA5 3LP

unitedutilities.com

Planning.Liaison@uuplc.co.uk

Chief Executive's Department
Manchester City Council PO Box 463
Manchester
M60 3NY

Your ref: 132214/FO/2021
Our ref: DC/21/5072
Date: 24-DEC-21

Dear Sir/Madam,

Location: Land South Of Chapeltown Street Manchester M1 2WH.
Proposal: Erection of a 15 storey building to form 107 apartments (Use Class C3) at floors 1 to 15, residential amenity facilities including a roof terrace (level 14), associated ground floor cycle storage (68 spaces), two ground floor commercial units (Use Class E/ Sui Generis (Drinking Establishment), multipurpose events Pavilion (Use Class E/ Sui Generis (Drinking Establishment), associated landscaping to site perimeter and rooftop PV panels.

With regards to the above development proposal, United Utilities Water Limited ('United Utilities') wishes to provide the following comments.

Drainage

In accordance with the National Planning Policy Framework (NPPF) and the National Planning Practice Guidance (NPPG), the site should be drained on a separate system with foul water draining to the public sewer and surface water draining in the most sustainable way.

Following our review of the submitted Drainage Strategy, we can confirm the proposals are acceptable in principle to United Utilities and therefore should planning permission be granted we request the following condition is attached to any subsequent Decision Notice:

Condition 1

The drainage for the development hereby approved, shall be carried out in accordance with principles set out in the submitted Foul & Surface Water Drainage Design Drawing 9861-WML-00-XX-DR-C-1001, Rev P01 - Dated 07/10/21 which was prepared by WML. For the avoidance of doubt and unless otherwise agreed in writing by the Local Planning Authority, surface water must drain at the restricted rate of 5 l/s. The development shall be completed in accordance with the approved details.

Reason: To ensure a satisfactory form of development and to prevent an undue increase in surface water run-off and to reduce the risk of flooding.

The applicant can discuss any of the above with Developer Engineer, **Graham Perry**, by email at wastewaterdeveloperservices@uuplc.co.uk.

Please note, United Utilities are not responsible for advising on rates of discharge to the local watercourse system. This is a matter for discussion with the Lead Local Flood Authority and / or the Environment Agency (if the watercourse is classified as main river).

If the applicant intends to offer wastewater assets forward for adoption by United Utilities, the proposed detailed design will be subject to a technical appraisal by an Adoptions Engineer as we need to be sure that the proposal meets the requirements of Sewers for Adoption and United Utilities' Asset Standards. The detailed layout should be prepared with consideration of what is necessary to secure a development to an adoptable standard. This is important as drainage design can be a key determining factor of site levels and layout. The proposed design should give consideration to long term operability and give United Utilities a cost effective proposal for the life of the assets. Therefore, should this application be approved and the applicant wishes to progress a Section 104 agreement, we strongly recommend that no construction commences until the detailed drainage design, submitted as part of the Section 104 agreement, has been assessed and accepted in writing by United Utilities. Any works carried out prior to the technical assessment being approved is done entirely at the developers own risk and could be subject to change.

Management and Maintenance of Sustainable Drainage Systems

Without effective management and maintenance, sustainable drainage systems can fail or become ineffective. As a provider of wastewater services, we believe we have a duty to advise the Local Planning Authority of this potential risk to ensure the longevity of the surface water drainage system and the service it provides to people. We also wish to minimise the risk of a sustainable drainage system having a detrimental impact on the public sewer network should the two systems interact. We therefore recommend the Local Planning Authority include a condition in their Decision Notice regarding a management and maintenance regime for any sustainable drainage system that is included as part of the proposed development.

For schemes of 10 or more units and other major development, we recommend the Local Planning Authority consults with the Lead Local Flood Authority regarding the exact wording of any condition. You may find the below a useful example:

Prior to occupation of the development a sustainable drainage management and maintenance plan for the lifetime of the development shall be submitted to the local planning authority and agreed in writing. The sustainable drainage management and maintenance plan shall include as a minimum:

a. *Arrangements for adoption by an appropriate public body or statutory undertaker, or, management and maintenance by a resident's management company; and*

b. *Arrangements for inspection and ongoing maintenance of all elements of the sustainable drainage system to secure the operation of the surface water drainage scheme throughout its lifetime.*

The development shall subsequently be completed, maintained and managed in accordance with the approved plan.

Reason: To ensure that management arrangements are in place for the sustainable drainage system in order to manage the risk of flooding and pollution during the lifetime of the development.

Please note United Utilities cannot provide comment on the management and maintenance of an asset that is owned by a third party management and maintenance company. We would not be involved in the discharge of the management and maintenance condition in these circumstances.

Water Supply and Metering

We can readily supply water for domestic purposes, but for larger quantities for example, commercial/industrial we will need further information.

Please note that for properties over two stories high and commercial properties we recommend the developer considers the installation of tanks and pumps.

Our water mains may need extending to serve any development on this site and the applicant may be required to pay a contribution.

Any necessary disconnection or diversion of the private main(s) must have the approval of the pipeline owner and be carried out to our standards at the applicant's expense.

The applicant must undertake a complete soil survey, as and when land proposals have progressed to a scheme design i.e. development, and results submitted along with an application for water. This will aid in our design of future pipework and materials to eliminate the risk of contamination to the local water supply.

The applicant should be instructed to lay their own private pipe, to United Utilities standards, back to the existing main. If this should involve passing through third party land United Utilities must receive a solicitor's letter confirming an easement, prior to connection.

The applicant has not stated whether provision of a new water supply is required. Use of the existing metered supply may be considered if it meets United Utilities standards. If not, a separate metered supply will be required at the applicant's expense.

Although water supply in the area is compliant with current regulatory standards, we recommend the applicant provides water storage of 24 hours capacity to guarantee an adequate and constant supply.

If the applicant intends to obtain a water supply from United Utilities for the proposed development, we strongly recommend they engage with us at the earliest opportunity. If reinforcement of the water network is required to meet the demand, this could be a significant project and the design and construction period should be accounted for.

In some circumstances we may require a compulsory meter is fitted. For detailed guidance on whether the development will require a compulsory meter please visit https://www.unitedutilities.com/my-account/your-bill/our-household-charges-20212022/ and go to section 7.7 for compulsory metering.

To discuss a potential water supply or any of the water comments detailed above, the applicant can contact the team at **DeveloperServicesWater@uuplc.co.uk.**

Please note, all internal pipework must comply with current Water Supply (water fittings) Regulations 1999.

United Utilities' Property, Assets and Infrastructure

The applicant should be aware of water mains in the vicinity of the proposed development site. Whilst this infrastructure is located outside the applicant's proposed red line boundary, the applicant must comply with our 'Standard Conditions for Works Adjacent to Pipelines'. We provide this information to support the applicant in identifying the potential impacts from all construction activities on United Utilities infrastructure and to identify mitigation measures to protect and prevent any damage to this infrastructure both during and after construction. This includes advice regarding landscaping in the vicinity of pipelines.

Where United Utilities' assets exist, the level of cover to the water mains and public sewers must not be compromised either during or after construction.

For advice regarding protection of United Utilities assets, the applicant should contact the teams as follows:

Water assets – DeveloperServicesWater@uuplc.co.uk
Wastewater assets – WastewaterDeveloperServices@uuplc.co.uk

It is the applicant's responsibility to investigate the possibility of any United Utilities' assets potentially impacted by their proposals and to demonstrate the exact relationship between any United Utilities' assets and the proposed development.

A number of providers offer a paid for mapping service including United Utilities. To find out how to purchase a sewer and water plan from United Utilities, please visit the Property Searches website; https://www.unitedutilities.com/property-searches/

You can also view the plans for free. To make an appointment to view our sewer records at your local authority please contact them direct, alternatively if you wish to view the water and the

sewer records at our Lingley Mere offices based in Warrington please ring 0370 751 0101 to book an appointment.

Due to the public sewer transfer in 2011, not all sewers are currently shown on the statutory sewer records and we do not always show private pipes on our plans. If a sewer is discovered during construction; please contact a Building Control Body to discuss the matter further.

Should this planning application be approved the applicant should contact United Utilities regarding a potential water supply or connection to public sewers. Additional information is available on our website http://www.unitedutilities.com/builders-developers.aspx

Yours faithfully

Planning, Landscape and Ecology Team

APPENDIX 08

Typical drainage details drawings

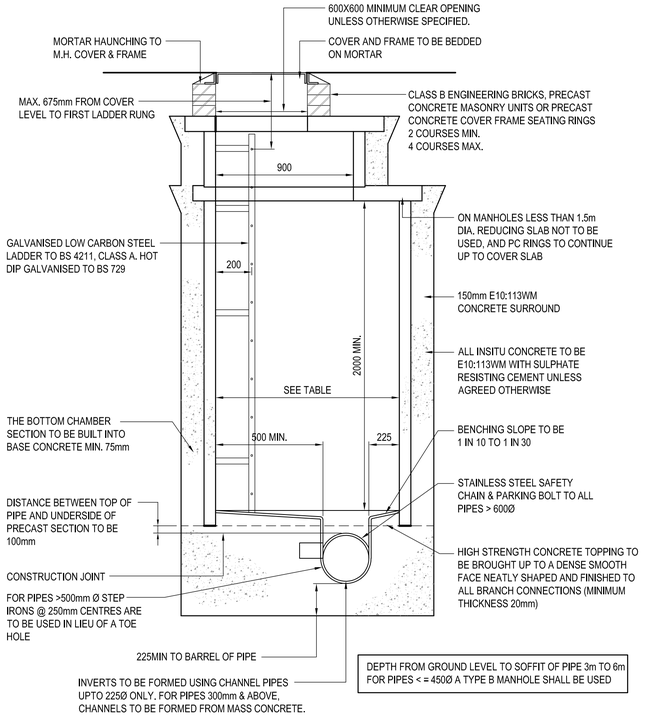

TYPICAL MANHOLE DETAIL TYPE A (SECTION)

[SCALE 1:20 @ A1]

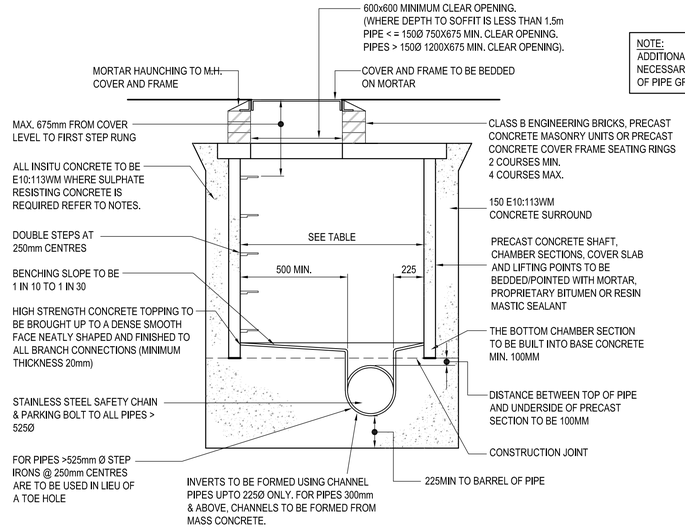

NOTE:
ADDITIONAL ROCKER PIPES MAY BE NECESSARY TO ACCOMMODATE TRANSITION OF PIPE GRADIENT TO VERTICAL DOWNPIPE

DIAMETER OF LARGEST PIPE IN MANHOLE (mm)	MIN. MANHOLE INTERNAL DIAMETER (mm)
< = 300mm (< 1.5M DEEP TO SOFFIT)	1200
> 300mm (< 1.5M DEEP TO SOFFIT)	THE LARGER OF 1800 OR (DN + 775)
< = 450mm	1200
> 450mm	THE LARGER OF 1800 OR (DN + 775)

TYPICAL MANHOLE DETAIL TYPE B (SECTION)

[SCALE 1:20 @ A1]

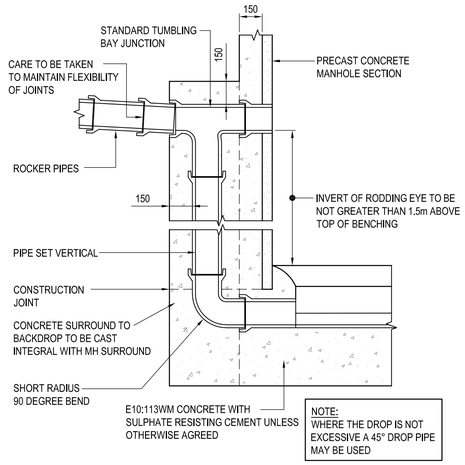

NOTE:
WHERE THE DROP IS NOT EXCESSIVE A 45° DROP PIPE MAY BE USED

TYPICAL VERTICAL BACKDROP DETAIL

[SCALE 1:20 @ A1]

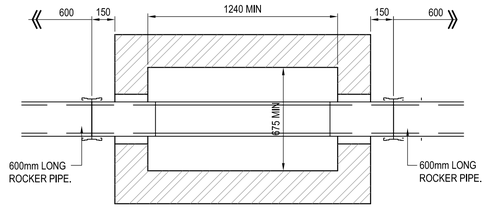

FOR CLEAR INTERNAL DIMENSIONS REFER TO MANHOLE SCHEDULE.

PLAN SECTION

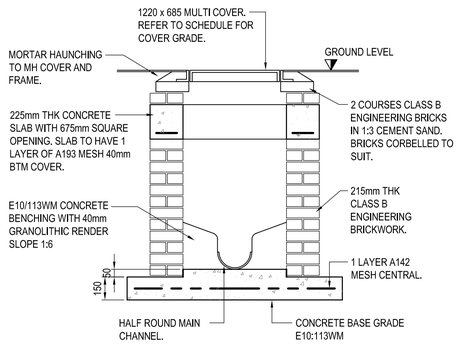

CROSS SECTION

BRICKWORK MANHOLE TYPE C DETAIL

(DEPTH TO SOFFIT UP TO 1.5m)

[SCALE 1:20]

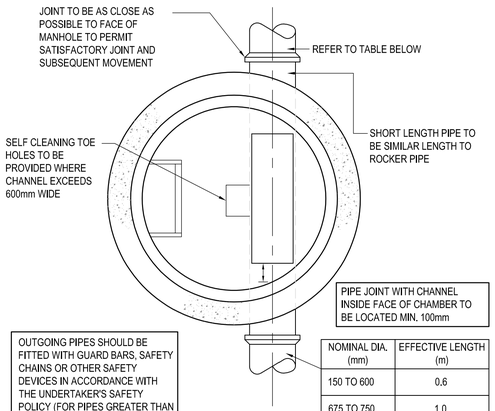

NOMINAL DIA. (mm)	EFFECTIVE LENGTH (m)
150 TO 600	0.6
675 TO 750	1.0
825 & OVER	1.25

DEPTH FROM GROUND LEVEL TO SOFFIT OF PIPE 3m TO 6m FOR PIPES < = 450Ø A TYPE B MANHOLE SHALL BE USED

TYPICAL MANHOLE DETAIL TYPE A (PLAN)

[SCALE 1:20 @ A1]

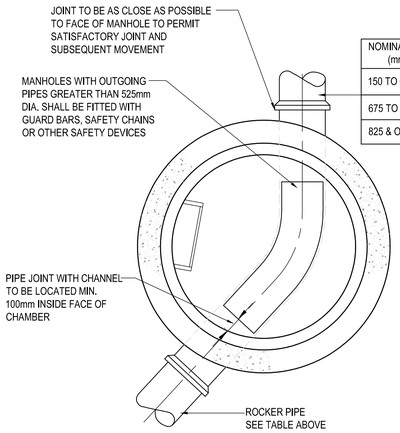

NOMINAL DIA. (mm)	EFFECTIVE LENGTH (m)
150 TO 600	0.6
675 TO 750	1.0
825 & OVER	1.25

P.C.C CHAMBER RINGS USED FOR MANHOLES LESS THAN 1500 TO SOFFIT WITHIN HIGHWAYS FOR LOAD CLASS D400 SHALL BE 600X600 CLEAR OPENING. ALL MAINTENANCE SHALL BE CARRIED OUT FROM THE SURFACE. NO STEP RUNGS SHALL BE PROVIDED. THE COVER OPENING SHALL BE LOCATED OVER THE OUTGOING PIPE.

TYPICAL MANHOLE DETAIL TYPE B (E/F)
DEPTH TO SOFFIT OF PIPE 1.5m* TO 3.0m

[SCALE 1:20 @ A1]

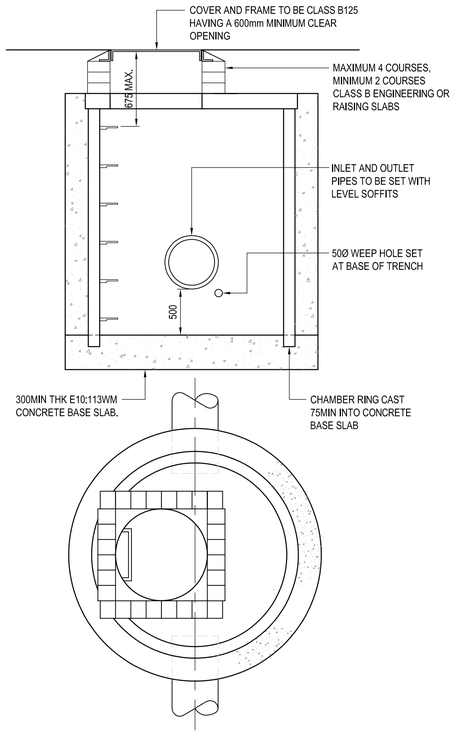

TYPICAL CATCHPIT MANHOLE PLAN & SECTION

(CHAMBER CONSTRUCTION AS FOR PCC MANHOLES)

[SCALE 1:20 @ A1]

GENERAL NOTES

1. DO NOT SCALE FROM THIS DRAWING WORK TO FIGURED DIMENSIONS ONLY.
2. NO DEVIATION FROM THE DETAILS SHOWN ON THIS DRAWING IS ALLOWED WITHOUT PRIOR PERMISSION IN WRITING.
3. ALL DRAWINGS ARE TO BE READ IN CONJUNCTION WITH ALL ARCHITECTS, ENGINEERS AND SPECIALISTS DRAWINGS AND THE SPECIFICATION.
4. THE CONTRACTOR SHALL INCORPORATE ALL THE REQUIREMENTS OF THE PRE-TENDER STAGE HEALTH & SAFETY PLAN.

RESIDUAL RISK REGISTER -

REFER TO WML CIVIL / STRUCTURAL DESIGN RISK REGISTER IN ADDITION TO THE HAZARDS / RISKS NORMALLY ASSOCIATED WITH THE TYPE OF WORKS INDICATED ON THIS DRAWING. NOTE THE FOLLOWING:-

TENDER

Rev.	Amendment	Date	By	Chkd
T01	TENDER ISSUE.	18.03.22	KPT	AW

Project
FERROUS

Client
CAPITAL & CENTRIC

Title
TYPICAL DRAINAGE DETAILS
SHEET 1 OF 3

WML Job No.	Drawn	Checked	Date	Scale
9861	KPT	AW	MARCH 2022	AS NOTED

WML CONSULTING
Civil, Structural & Geotechnical Engineers
No.8 Oak Green
Earl Road
Stanley Green Business Park
Cheadle Hulme
Cheshire SK8 6QL
Tel 0161 482 0600
Fax 0161 486 9210
e-mail info@wmlconsulting.com
www.wmlconsulting.com

Drawing No.

Project	Originator	Volume	Level	Type	Role	Number	Rev
9861	WML	00	XX	DR	C	1002	T01

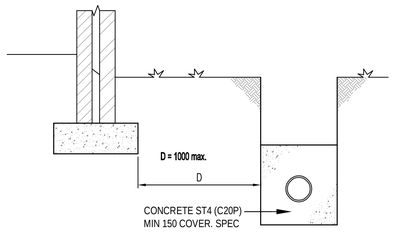

WHERE BOTTOM OF TRENCH IS LOWER THAN BOTTOM OF FOUNDATIONS USE CONCRETE SURROUND. TOP OF CONCRETE NOT TO BE LOWER THAN BOTTOM OF FOUNDATIONS

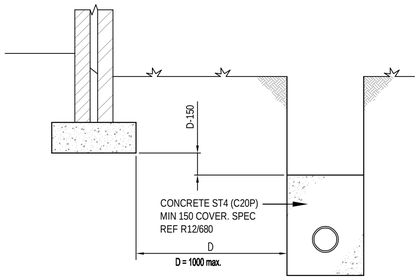

WHERE BOTTOM OF TRENCH IS LOWER THAN A CRITICAL LEVEL USE CONCRETE SURROUND. TOP OF CONCRETE TO BE AS DEFINED BELOW.

PIPES NEAR FOUNDATIONS

[SCALE 1:20]

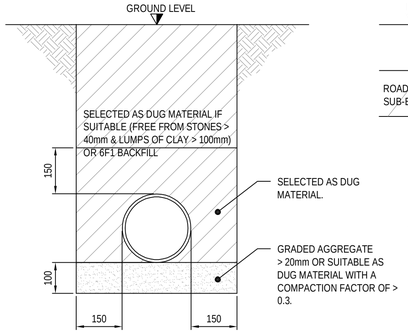

DRAIN TRENCH NOT SUBJECTED TO TRAFFIC

(BEDDING CLASS N)

[SCALE 1:10]

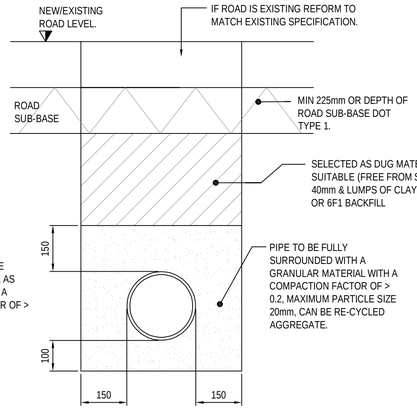

DRAIN TRENCH SUBJECTED TO TRAFFIC

(BEDDING CLASS S)

[SCALE 1:10]

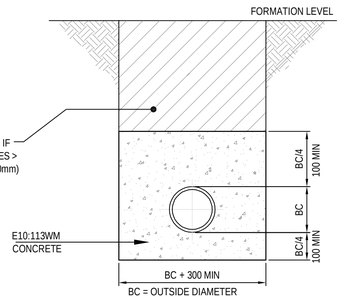

CONRETE SURROUND UNDER ROADS LESS THAN 1200mm COVER & NON-TRAFFICKED LESS THAN 900mm COVER.

[SCALE 1:10]

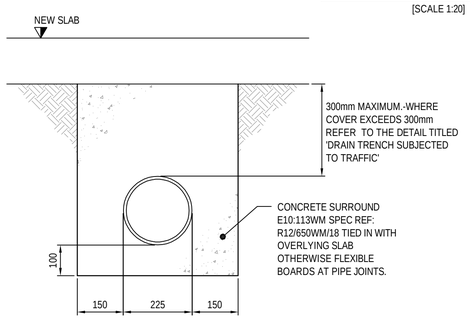

PIPES UNDER SLABS

[SCALE 1:10]

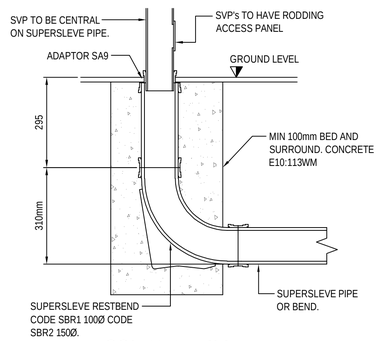

SOIL VENT PIPE

[SCALE 1:10]

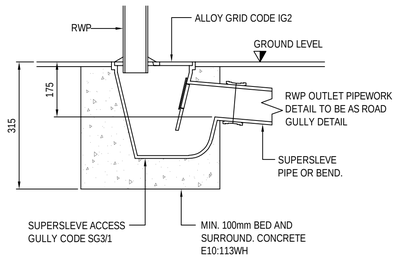

RWP DETAIL

[SCALE 1:10]

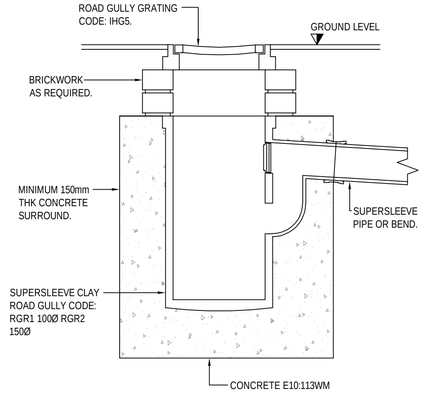

ROAD GULLY

(300Ø x 600Dp)

[SCALE 1:10]

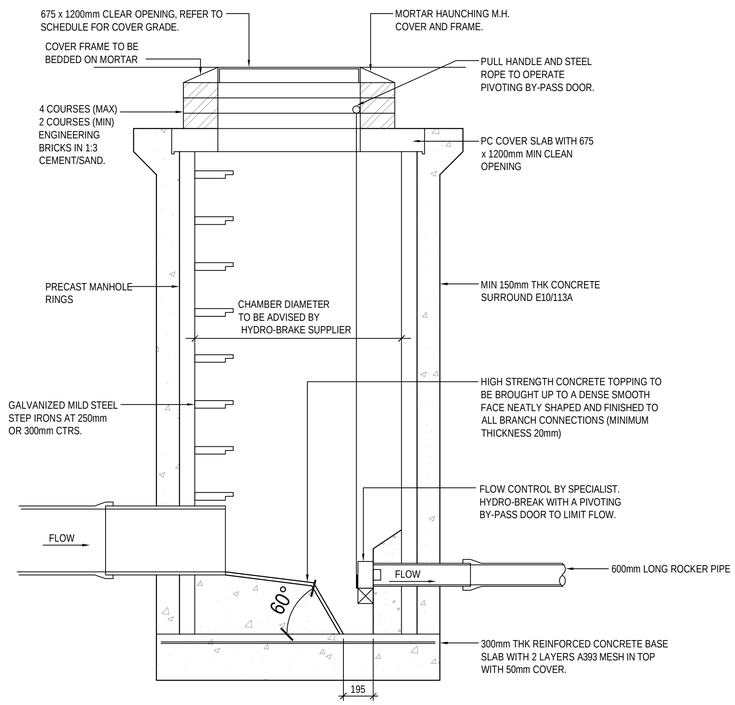

NEW HYDRO-BRAKE CHAMBER

(BACKFILL, SHAFT, ACCESS, COVER SLAB AND COVER & FRAME AS FOR PCC MANHOLES)

[SCALE 1:20]

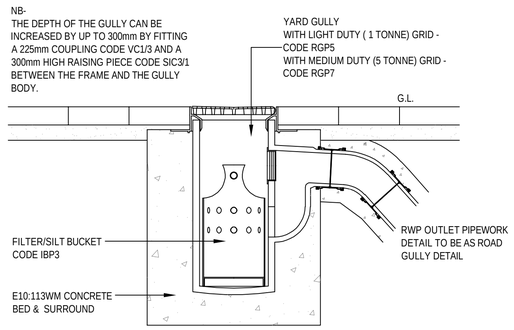

YARD GULLY DETAIL

[SCALE 1:10]

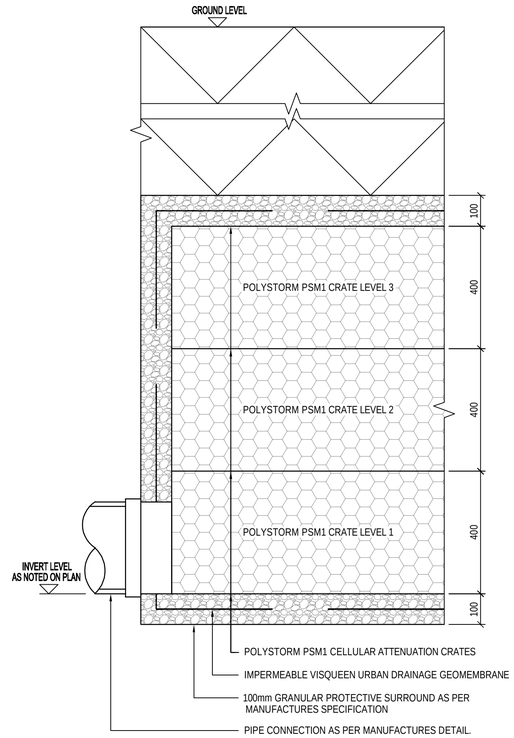

TYPICAL SECTION THROUGH ATTENUATION TANK

[SCALE 1:10]

GENERAL NOTES

1. DO NOT SCALE FROM THIS DRAWING WORK TO FIGURED DIMENSIONS ONLY.
2. NO DEVIATION FROM THE DETAILS SHOWN ON THIS DRAWING IS ALLOWED WITHOUT PRIOR PERMISSION IN WRITING.
3. ALL DRAWINGS ARE TO BE READ IN CONJUNCTION WITH ALL ARCHITECTS, ENGINEERS AND SPECIALISTS DRAWINGS AND THE SPECIFICATION.
4. THE CONTRACTOR SHALL INCORPORATE ALL THE REQUIREMENTS OF THE PRE-TENDER STAGE HEALTH & SAFETY PLAN.

RESIDUAL RISK REGISTER -

REFER TO WML CIVIL / STRUCTURAL DESIGN RISK REGISTER IN ADDITION TO THE HAZARDS / RISKS NORMALLY ASSOCIATED WITH THE TYPE OF WORKS INDICATED ON THIS DRAWING. NOTE THE FOLLOWING:-

NOTE!
FILL SELECTED FROM EXCAVATED MATERIAL SHOULD BE READILY COMPACTABLE, FREE FROM TIMBER, FROZEN MATERIAL, VEGETABLE AND FOREIGN MATTER & EXCLUDE HARD LUMPS OF CLAY RETAINED ON A 100mm SIEVE & STONES RETAINED ON A 40mm SIEVE.

TENDER

Rev.	Amendment	Date	By	Chkd
T02	MINOR AMENDMENTS.	19.03.25	KPT	AW
T01	TENDER ISSUE.	18.03.22	KPT	AW

Project
FERROUS

Client
CAPITAL & CENTRIC

Title
TYPICAL DRAINAGE DETAILS
SHEET 2 OF 3

WML Job No.	Drawn	Checked	Date	Scale
9861	KPT	AW	MARCH 2022	AS NOTED

WML CONSULTING
Civil, Structural & Geotechnical Engineers
No.8 Oak Green
Earl Road
Stanley Green Business Park
Cheadle Hulme
Cheshire SK8 6QL
Tel 0161 482 0600
Fax 0161 486 9210
e-mail info@wmlconsulting.com
www.wmlconsulting.com

Drawing No.

Project	Originator	Volume	Level	Type	Role	Number	Rev
9861	WML	00	XX	DR	C	1003	T02

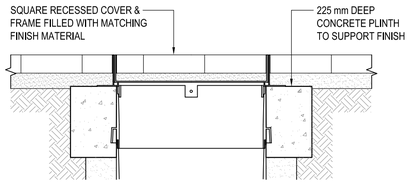

SITED IN DRIVEWAYS / HARD LANDSCAPED AREAS WITH RECESSED COVER

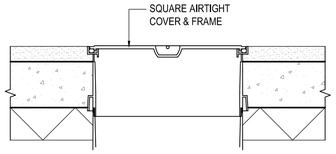

SITED IN CONCRETE FLOOR SLAB

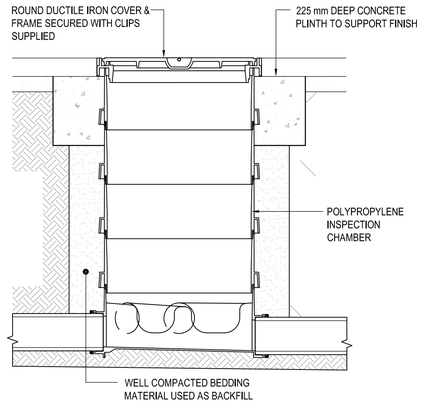

NB - UNIVERSAL PRODUCT - ADAPTOR TO PVC-U PIPE INCLUDED

SITED IN DRIVEWAYS / HARD LANDSCAPED AREAS WITH STANDARD ROUND COVER

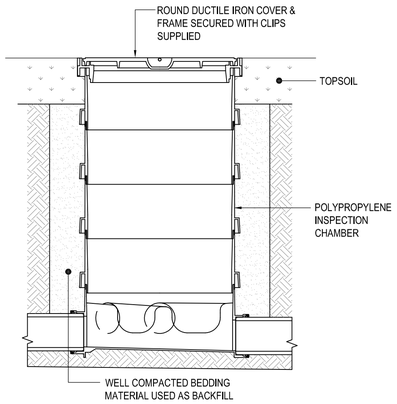

SITED IN SOFT LANDSCAPED AREAS WITH STANDARD ROUND COVER

POLYPROPYLENE INSPECTION CHAMBER INSTALLATION DETAIL (475Ø UPTO 1.2m DEEP)

(HEPWORTH PRODUCTS)

[SCALE 1:20]

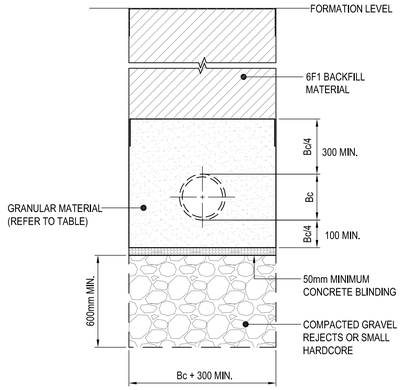

Y VALUE (BELOW PIPE)
HARD SPOTS/IRREGULAR TRENCH BOTTOM
Bc/4 (200mm MIN)
EVEN TRENCH BOTTOM BC/6 (100mm MIN)

(EXCAVATION AND BACKFILL MATERIAL TO BE WRAPPED WITH GEOTEXTILE)

Bc = OUTSIDE DIAMETER

CLASS S BEDDING CONSTRUCTION IN SOFT GROUND

[SCALE 1:20]

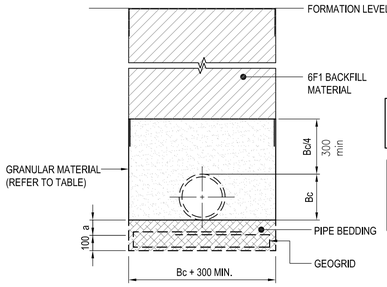

EXCAVATION AND BACKFILL MATERIAL TO BE WRAPPED WITH GEOTEXTILE

NOTE
DIMENSION 'A', THE DEPTH OF THE BEDDING MATERIAL BELOW THE PIPE IS 150mm FOR SLEEVE JOINTED PIPES AND 200mm FOR SOCKETED PIPES.

Bc = OUTSIDE DIAMETER

PIPELINE CONSTRUCTION IN WEAK GROUND USING A GEOGRID

[SCALE 1:20]

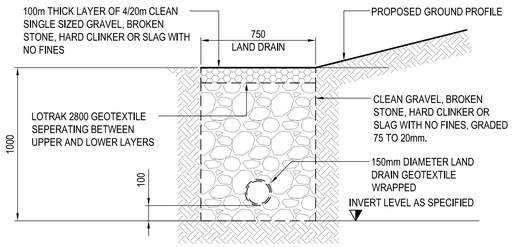

EMBANKMENT LAND DRAIN DETAIL 750mm x 1000mm DEEP

[SCALE 1:20]

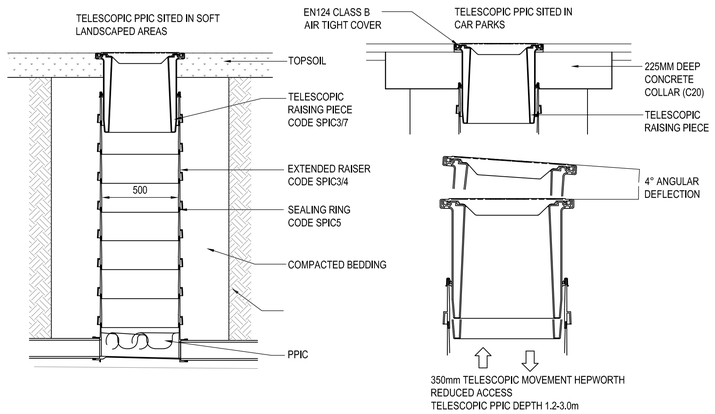

HEPWORTH REDUCED ACCESS TELESCOPIC PPIC (475Ø UPTO 3.0m DEEP)

(HEPWORTH PRODUCTS)

[SCALE 1:20]

SITED IN DRIVEWAYS/ PAVED AREAS

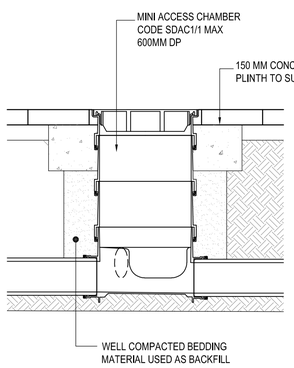

SITED IN LANDSCAPED AREAS

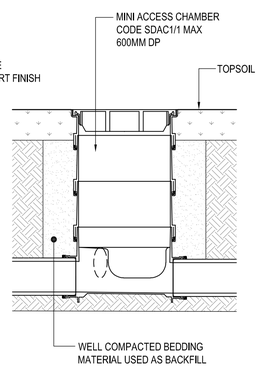

NB - UNIVERSAL PRODUCT - ADAPTORS TO PVC-U PIPE INCLUDED

MINI ACCESS CHAMBER INSTALLATION DETAIL (300Ø MAX. DEPTH 600mm)

(HEPWORTH PRODUCTS)

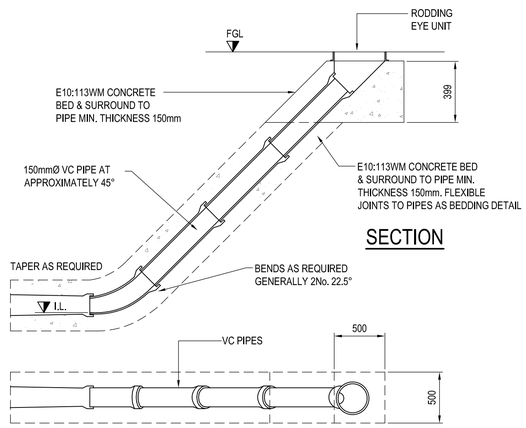

RODDING EYE DETAIL (PLAN & SECTION)

GENERAL NOTES

1. DO NOT SCALE FROM THIS DRAWING WORK TO FIGURED DIMENSIONS ONLY.
2. NO DEVIATION FROM THE DETAILS SHOWN ON THIS DRAWING IS ALLOWED WITHOUT PRIOR PERMISSION IN WRITING.
3. ALL DRAWINGS ARE TO BE READ IN CONJUNCTION WITH ALL ARCHITECTS, ENGINEERS AND SPECIALISTS DRAWINGS AND THE SPECIFICATION.
4. THE CONTRACTOR SHALL INCORPORATE ALL THE REQUIREMENTS OF THE PRE-TENDER STAGE HEALTH & SAFETY PLAN.

RESIDUAL RISK REGISTER -

REFER TO WML CIVIL / STRUCTURAL DESIGN RISK REGISTER IN ADDITION TO THE HAZARDS / RISKS NORMALLY ASSOCIATED WITH THE TYPE OF WORKS INDICATED ON THIS DRAWING. NOTE THE FOLLOWING:-

TENDER

Rev.	Amendment	Date	By	Chkd
T01	TENDER ISSUE.	18.03.22	KPT	AW

Project
FERROUS

Client
CAPITAL & CENTRIC

Title
TYPICAL DRAINAGE DETAILS
SHEET 3 OF 3

WML Job No.	Drawn	Checked	Date	Scale
9861	KPT	AW	MARCH 2022	AS NOTED

WML CONSULTING
Civil, Structural & Geotechnical Engineers
No.8 Oak Green
Earl Road
Stanley Green Business Park
Cheadle Hulme
Cheshire SK8 6QL
Tel 0161 482 0600
Fax 0161 486 9210
e-mail info@wmlconsulting.com
www.wmlconsulting.com

Drawing No.

Project	Originator	Volume	Level	Type	Role	Number	Rev
9861	WML	00	XX	DR	C	1004	T01