KITCHEN EXTRACT

MFU RANGE

MULTI FILTRATION UNIT

purified air®

COMMERCIAL KITCHEN FILTRATION EXPERTS

Purified Air Ltd. has been manufacturing and servicing market-leading technology to filter and control oil, grease, smoke and odour from commercial kitchens since 1984.

CONTENTS

02 TECHNICAL OVERVIEW

Key Features 02
Our Filters 03
How It Works 06
Modular System 07
Technical Specifications 08

12 ABOUT US

An Overview
Our Coverage

13 GET IN TOUCH

Contact Details

KITCHEN EXTRACT

MFU RANGE

MULTI-FILTRATION UNIT

Our MFUs are designed explicitly for kitchen extract systems; they collect the oil, grease and smoke particles filtered out of the exhaust through a combination of passive air filters, including panel, bag, HEPA and carbon.

The high-quality unit can house multiple filter combinations and is effortlessly serviced, replaced or even re-configured to provide continually effective and affordable kitchen extract particulate control. Additionally, the units help reduce grease build-up within the ducting and reduce odours.

Its modular design means units can be configured in various ways to handle any required flow rate, providing effective and efficient kitchen extract filtration.

KEY FEATURES

- Built for stock
- Multiple configurations
- Eliminates oil, grease, smoke particles and odours
- Modular in design
- Filters particles down to submicron levels
- Endless combinations of passive filtration
- Specifically designed for commercial kitchen application
- Greatly reduces grease build-up within the duct run

FILTERS REMOVE

Smoke

Steam

Oil

Grease

OUR FILTERS

PANEL FILTERS

Our pleated panel filters are constructed using a core of pleated fibrous media designed specifically for use in air filtration. This is then thermally bonded onto a galvvanised steel support mesh for maximum rigidity which is then fully bonded into a moisture resistant rigid white lined card frame. These filters are used as stand-alone pre filters or as a pre filter to bag filters filtering oil and grease particles.

BAG FILTERS

Our general purpose bag filters are manufactured using a galvanised steel header to retain the pocket sets.

The pockets are produced from synthetic micro-fibres specifically designed for use in air filtration. They can be applied as a pre filter to carbon cells in malodour extraction, taking out oil and grease particles ahead of the carbon filter stage.

HEPA FILTERS

To qualify to be called a High-Efficiency Particulate Air or HEPA filter, the filter must be able to remove, from the air that passes through it, 99.97% of particles down to a sub-micron level. Our main use of HEPA filtration is the removal of smoke particles. We do supply many different sizes and grades of HEPA filters so please contact us with your requirements.

CARBON FILTERS

Our site safe carbon filters use panels of activated carbon to remove the malodourous gases within the commercial kitchen extract duct through the process of chemical adsorption. By installing adequate pre-filtration before our site safe filters, the carbon life span is greatly increased, allowing it to nullify malodours at optimum efficiency for much longer.

HOW IT WORKS

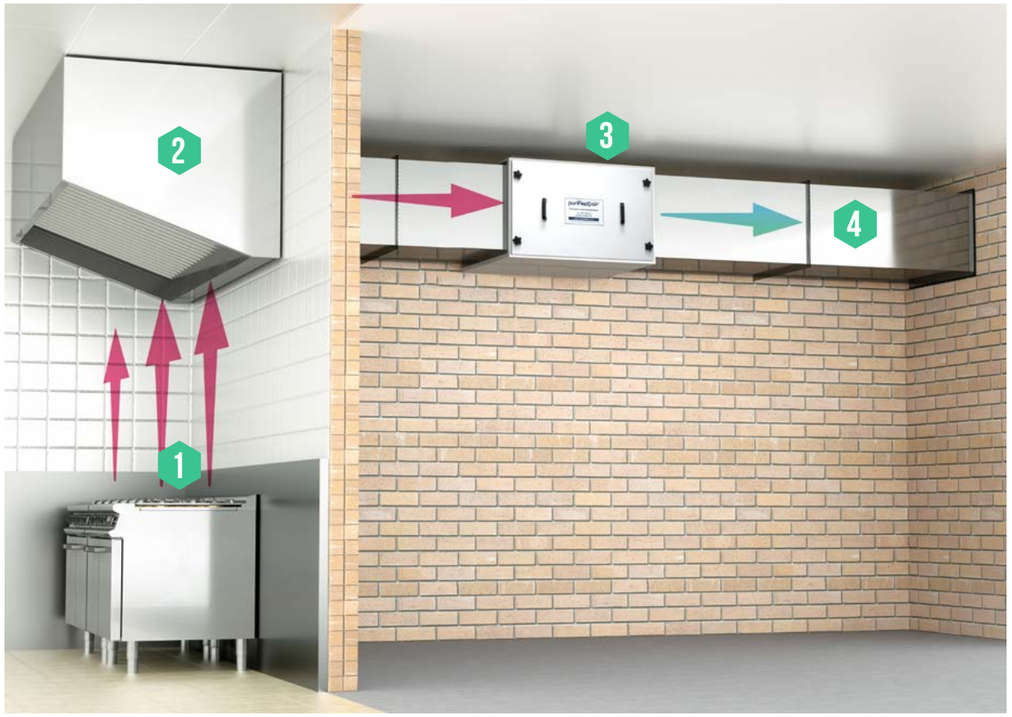

Our MFUs fit in line with the kitchen ducting and can be configured modularly to cope with all extract flow rates.

01 Cooking particulates and odours

02 Canopy Grease Filter

03 MFU Unit

04 Airflow

OUR SERVICES

Design

Manufacture

Maintain

MODULAR SYSTEM

Our system allows specifiers and installers to create a wide range of configurations which contain a customisable combination of different air filters. This provides a tailored, cost-effective air filtration solution.

MFU 600

MFU 1200

MFU 1800

SAMPLE CONFIGURATIONS

2 X MFU 600

2 X MFU 1800

TECHNICAL SPECIFICATIONS

GLOBAL SPECIFICATIONS					
`FILTERS		Width(mm)	Height	Depth	Weight (kg)
Panel	45mm	595	595	45	0.5
	95mm	595	595	95	0.5
Bag	300mm	592	592	300	1.5
HEPA	300mm	592	592	300	18
Carbon	Half	594	597	292	25
	Site safes	594	594	597	54
CASINGS ONLY					
MFU 600		640	630	925	55.5
MFU 1200		1245	630	925	78
MFU 1800		1885	630	925	133.5

MFU 600

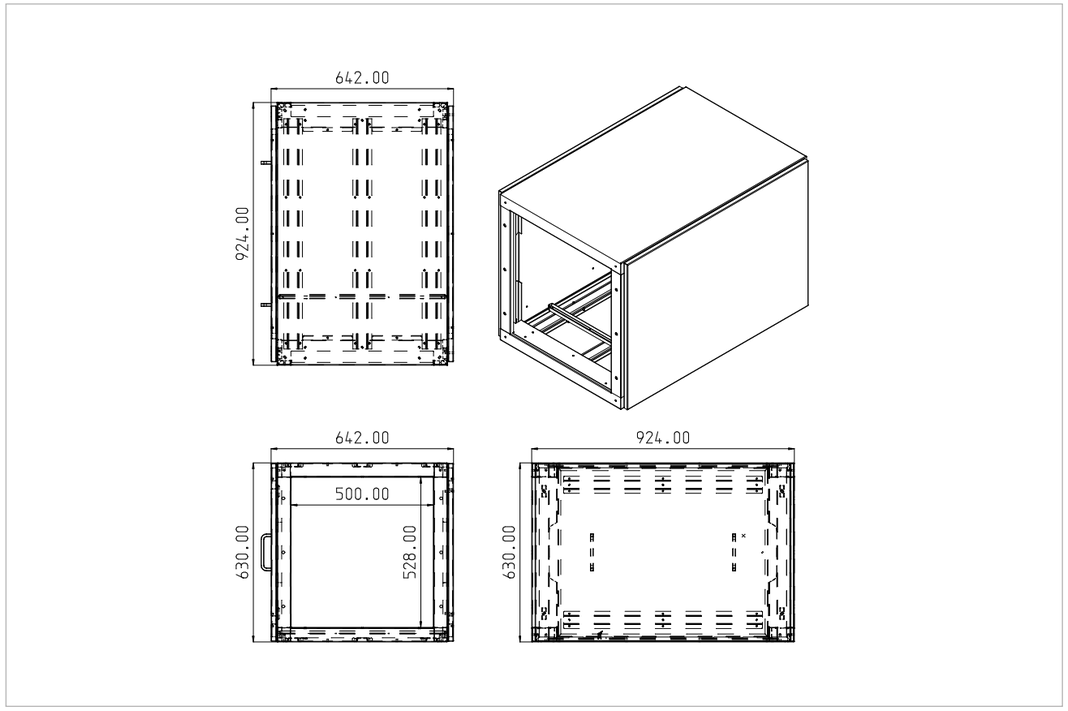

MFU 600							
		Model A1	Model B1	Model C1	Model D1	Model E2	Model F2
Panel	45mm						
	95mm	1	1	1	1	1	1
Bag	300mm		1	1			1
HEPA	300mm		1		1		1
Carbon	Half			1	1		
	Site safes	3				6	3
Flow Rate*		1m³/s	1m³/s	1m³/s	1m³/s	1m³/s	1m³/s
Weight		110	76	89	106	220	186
No. Units		Single	Single	Single	Single	Double	Double
Dimensions							
Height		630	630	630	630	630	630
Width		640	640	640	640	640	640
Depth (Direction of airflow)		925	925	925	925	1850	1850

* Flow Rate – unit selection dependent on air flow rate and cooking style

MFU 1200

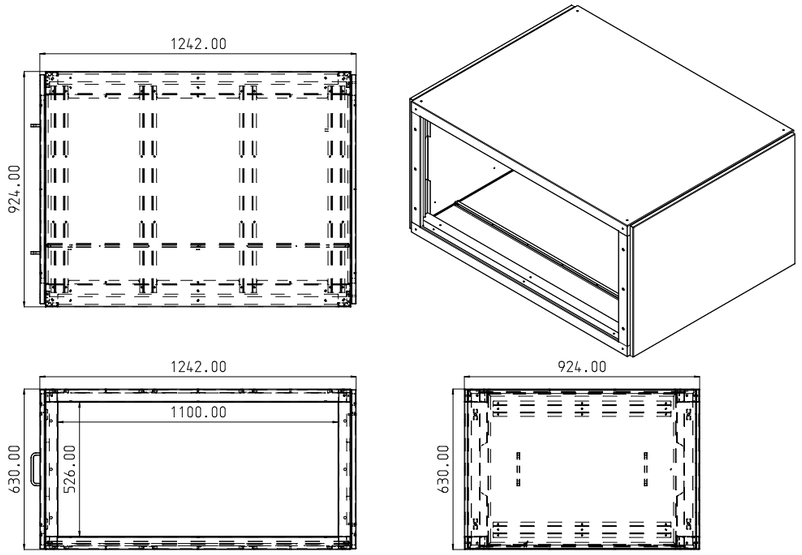

MFU 1200							
		Model A1	Model B1	Model C1	Model D1	Model E2	Model F2
Panel	45mm						
	95mm	2	2	2	2	2	2
Bag	300mm		2	2			2
HEPA	300mm		2		2		2
Carbon	Half			2	2		
	Site safes	6				12	6
Flow Rate*		2m³/s	2m³/s	2m³/s	2m³/s	2m³/s	2m³/s
Weight		187	118	145	181	373	304
No. Units		Single	Single	Single	Single	Double	Double
Dimensions							
Height		630	630	630	630	630	630
Width		1245	1245	1245	1245	1245	1245
Depth	(Direction of airflow)	925	925	925	925	1850	1850

* Flow Rate – unit selection dependent on air flow rate and cooking style

MFU 1800

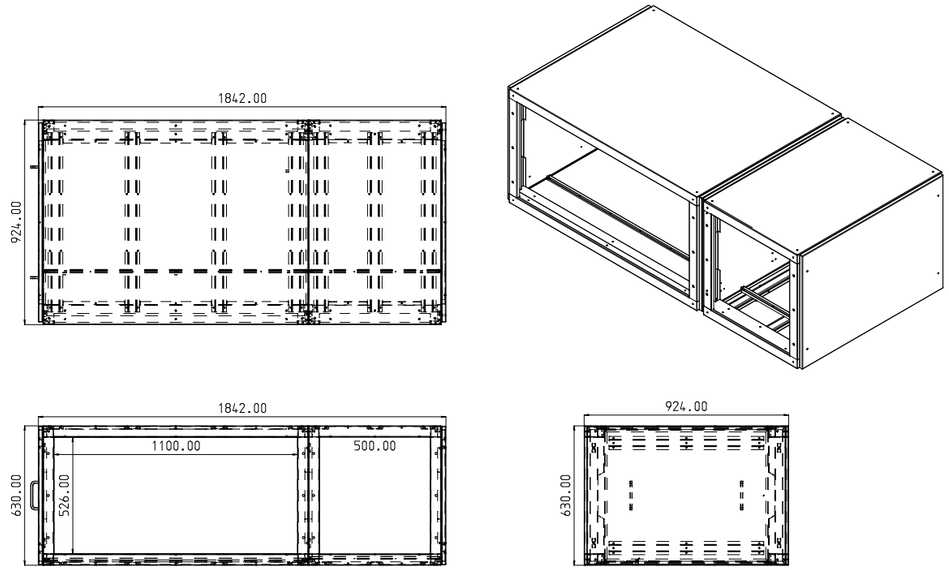

MFU 1800							
		Model A1	Model B1	Model C1	Model D1	Model E2	Model F2
Panel	45mm						
	95mm	3	3	3	3	3	3
Bag	300mm		3	3			3
HEPA	300mm		3		3		3
Carbon	Half			3	3		
	Site safes	9				18	9
Flow Rate*		3m³/s	3m³/s	3m³/s	3m³/s	3m³/s	3m³/s
Weight		297	194	234	284	485	489
No. Units		Single	Single	Single	Single	Double	Double
Dimensions							
Height		630	630	630	630	630	630
Width		1885	1885	1885	1885	1885	1885
Depth	(Direction of airflow)	925	925	925	925	1850	1850

* Flow Rate – unit selection dependent on air flow rate and cooking style

ABOUT US

Purified Air Ltd. has been striving to find the best and most cost-effective way to filter and control oil, smoke, fat and odour produced by commercial kitchens since 1984.

Purified Air manufactures filtration and odour control products for stock and bespoke systems, supplying systems to many sectoral brands. The design of each solution is based on the type of food cooked, the cooking process used, and the extracted air volume providing tried and tested purified kitchen exhaust air for Fast Food, Casual Dining and Luxury Concept Restaurant (Fine Dining) markets. By working with these variables, we can design and supply some of the world's best commercial kitchen filtration and odour control systems.

WORLDWIDE COVERAGE

- United Kingdom
- Middle East
- Europe
- Asia
- Australia

MARKET LEADERS SINCE 1984

UK MANUFACTURER

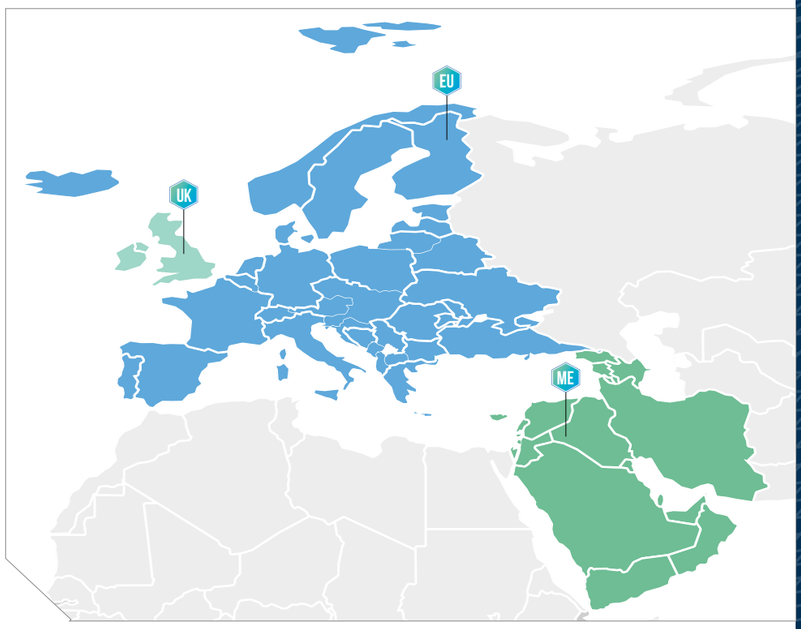

GET IN TOUCH

01708 755 414
enq@purifiedair.com
Purified Air Limited, Lyon House
Lyon Road, Romford,
Essex RM1 2BG

purifiedair.com

purifiedair®

purifiedair.com