Curtins | Building a better future

St Michaels Phase 1
Verification Report & Maintenance Strategy

Curtins Ref: **078847-CUR-00-XX-T-C-9200**
Revision: P05
Issue Date: 11 February 2025

Client Name: Bowmer Kirkland

Site Address: City Police Headquarters, Southmill Street, Manchester, M2 5GB

Rev	Description	Issued by	Checked	Date
P01	Draft Issue	JC	RB	14 October 2024
P02	CCTV and photographic information added	JC	RB	29 November 2024
P03	As Built Drawings Included	JC	CS	02 December 2024
P04	Maintenance Company information included	JC	RB	29 January 2025
P05	Drainage Calculations included	JC	RB	11 February 2025

This report has been prepared for the sole benefit, use, and information for the client. The liability of Curtins Consulting Limited with respect to the information contained in the report will not extend to any third party.

Authors	Signature	Date
Jacob Collin Graduate Civil Engineer		11 February 2025

Reviewed	Signature	Date
Richard Bartlett Principal Civil Engineer		11 February 2025

Copyright © 2023 Curtins Consulting Ltd

Contents

Contents

1 Introduction **4**

2 Drainage Strategy **5**

3 Verification **7**

4 General Maintenance **14**

Copyright © 2023 Curtins Consulting Ltd

Appendices

Appendix A

United Utilities Approval

Appendix B

Drainage Components Product Details

Appendix C

CCTV Survey Report by QED Construction

Appendix D

Bowmer & Kirkland Correspondence

Appendix E

As-Built Drawings

Appendix F

Pumping Station Commissioning Certificates

Appendix G

Surface Water Drainage Calculations

Copyright © 2023 Curtins Consulting Ltd

1 Introduction

1.1 Project Background

Curtins have been appointed by Bowmer Kirkland to provide a verification and maintenance plan for the below ground drainage design for St Michaels, Manchester.

The report is based on currently available information and best practice guidance.

Proposals contained or forming part of this report represent the design intent and may be subject to alteration or adjustment in completing the detailed design for this project. Where such adjustments are undertaken as part of the detailed design and are deemed a material deviation from the intent contained in this document, prior approval shall be obtained from the relevant authority in advance of commencing such works.

The surface water network has been designed to accommodate the 1 in 100-year storm rainfall event plus 40% for climate change. As the flows are being attenuated by on site features, there will be a period of time after storm events where the network is still partially or fully surcharged and is draining down. Where this surcharging is still present after 48hrs appropriate action should be taken.

1.2 Planning Condition

This report has been produced in order to satisfy the discharge requirements of Condition 14 which is as follows:

'The development hereby approved shall not be occupied until details of the implementation, maintenance and management of the sustainable drainage scheme have been submitted to and approved by the City Council as Local Planning Authority. The scheme shall be implemented and thereafter managed and maintained in accordance with the approved details. Those details shall include:

- Verification report providing photographic evidence of construction as per design drawings.

- As built construction drawings if different from design construction drawings.

- Management and maintenance plan for the lifetime of the development which shall include the arrangements for adoption by any public body or statutory undertaker, or any other arrangements to secure the operation of the sustainable drainage scheme throughout its lifetime.

Reason- To manage flooding and pollution and to ensure that a managing body is in place for the sustainable drainage system and there is funding and maintenance mechanism for the lifetime of the development, pursuant to policy EN17 of the Manchester Core Strategy.'

1.3 Scope of the Maintenance Strategy

This report demonstrates the below ground drainage which has been installed for the development site and provides product information to inform future maintenance requirements.

This manual is intended to give an overview of the operation and maintenance for the drainage features included with the drainage strategy and in relation to typical details only. Where proprietary products are specified the manufacturer's instructions and recommendations should be followed in priority to this document unless specifically noted otherwise due to project constraints.

The recommended operations and frequencies are typical only and should be more frequent initially to ensure that there are no unforeseen issues with the operation and then adjusted to suit the site requirements.

Copyright © 2023 Curtins Consulting Ltd

2 Drainage Strategy

2.1 General

The foul water from the ground floor and the surface water on site is drained to the basement where it is then pumped up to ground level to be discharged into the existing public combined sewer within Jackson Row.

Foul drainage from ground floor upwards is discharged via two saddle connections to the existing public combined sewer within Bootle Street.

The drainage network is a separate foul and surface water system within the development.

The surface water network has 1 outfall in the north of the site. The foul water network has 4 outfalls, 2 are located in the north of the site and the other 2 are to the south of the site.

2.2 Foul Drainage

The private foul water drainage within the basement is split into 2 outfalls, each with its own pump up to the ground floor. The connections from the basement then discharge into the existing public combined sewer within Jackson Row by gravity via separate saddle connections.

Foul water drainage from ground floor upwards is underslung from the ground floor slab before passing through the capping beam. It then discharges to the public combined sewer within Bootle street via two gravity saddle connections.

The current peak foul flow has been determined as 8L/S based on Discharge Units provided by the M&E Engineer.

2.3 Surface Water Drainage

Any new development site drainage should be designed in accordance with current best practice to provide adequate capacity not to flood for the critical 1 in 30-year storm event and flood water generated for up to the critical 1 in 100-year plus climate change storm event shall be constrained within the areas on site so not to cause damage to buildings, essential services or adjoining developments and services.

The proposed network on site requires attenuation to provide capacity to accommodate the volumes generated during the 1 in 100 year +40% design event whilst maintaining the maximum flow restriction.

Assessment was completed at preliminary design stage to confirm the most viable method of discharge was connection to the combined public sewer at a restricted rate.

The Surface Water network discharges into the existing public combined sewer within Jackson Row via a saddle connection at a peak flow of 23.4L/S

There is a below ground cellular attenuation tank located near the centre of the basement. The tank provides 121.6m^3 storage based on a peak flow rate of 23.4L/S

Further details of the full drainage system can be found in the surface water drainage calculations enclosed in *Appendix G.*

Copyright © 2023 Curtins Consulting Ltd

2.4 Approvals

The two foul connections to the public sewer in Bootle Street have been approved under two Section 106 Agreements referenced Application 1 (02776887) & Application 2 (02777187).

The two foul and one surface water connections to the public sewer in Jackson Row have been approved under two Section 106 Agreements referenced Application 3 (02777336) & Application 4 (02777526). Application 3 covers one of the foul connections and Application 4 covers the surface water connection and a foul water connection.

The location of these connections indicated are on the S106 agreements within Appendix A.

The correspondence is enclosed in Appendix A.

Copyright © 2023 Curtins Consulting Ltd

3 Verification

3.1 Introduction

The verification section has been developed with reference to the drainage design details and philosophy provided in section 2 of this report. Manchester City Council requirements are to verify the installation of the Drainage and SuDS to confirm by Photographic record that this has been installed.

The following elements have been recorded to date:

- Attenuation Tank
- Pumping Station

A CCTV survey has also been provided along with formal confirmation the drainage has been installed as per Curtins design.

Commissioning certificates have been provided for the three pumping stations.

3.2 Photographic Information

Figure 1 – Attenuation tank installation

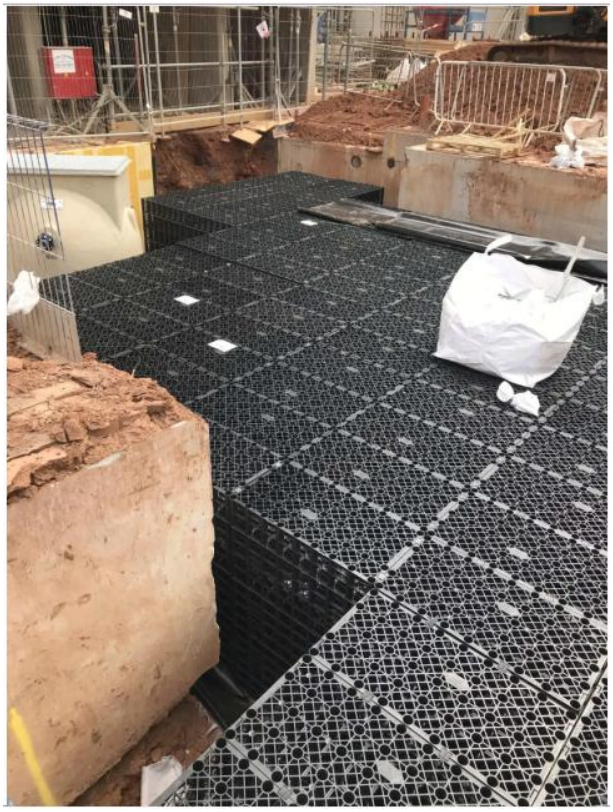

Copyright © 2023 Curtins Consulting Ltd

Copyright © 2023 Curtins Consulting Ltd

Figure 2 – Pumping Station installation

Copyright © 2023 Curtins Consulting Ltd

Copyright © 2023 Curtins Consulting Ltd

Figure 3 – Surface Water Pump Station Chamber - SPS1

Copyright © 2023 Curtins Consulting Ltd

Figure 4 – Foul Water Pump Station Chamber – FPS1

Copyright © 2023 Curtins Consulting Ltd

Figure 5 – Foul Water Pump Station Chamber – FPS2

Refer to Curtins drawing 63068-CUR-XX-B1-DR-C-5200 for pump locations and further information.

3.3 Certificates

Bowmer & Kirkland have provided certificates from the pump manufactures certifying the commission of the two foul and one surface water pumping station.

The certificates are available in *Appendix F*.

3.4 CCTV Survey and As Built information

Bowmer & Kirkland have confirmed the drainage has been installed to Curtins design and have provided As-Built information. This has been reflected on the As-Built drawings enclosed in *Appendix E.*

A CCTV Survey was completed on the 4 foul outfalls in September 2024 by QED Construction.

The survey confirms at this time, the foul outfalls were in general good condition, and no defects were noted in the report. However, the 225dia surface water outfall within Jackson Row and the drainage within the building has not been included in the CCTV report.

The CCTV survey, however, does not cover the entire drainage network on site. It is recommended that the full extent of the network is surveyed prior to handover.

The CCTV Report is available in *Appendix C.*

Copyright © 2023 Curtins Consulting Ltd

4 General Maintenance

4.1 Maintenance Company

MAPP Building Management has been appointed by the developer to operate the building. MAPP have appointed NG Bailey to carry out all the planned maintenance and reactive maintenance works.

Their office address and contact number are as follows:

NG Bailey
Exchange Quay
Building 5
Floor 6
Salford
M5 3EF
0161 872 0171

4.2 Components

This section is intended to give an overview of the operation and maintenance for the drainage features included with the drainage strategy and in relation to typical details. Where proprietary products are specified, the manufacturer's instructions and recommendations should be followed in priority to this document unless specifically noted otherwise due to project constraints.

The recommended operations and frequencies are typical only and should be more frequent initially to ensure that there are no unforeseen issues with the operation and then adjusted to suit the site requirements.

The following components have been included within the drainage design for the proposed development:

- Inspection, Manhole and Catchpit Chambers
- Pipes
- Attenuation Tank
- Pump Station

A suitable maintenance strategy should be adopted to ensure the drainage network is cleaned regularly and the routine maintenance and cleansing regime should be documented.

It is assumed that the maintenance of the private drainage network will be the responsibility of an on-site facilities management team. Confirmation is yet to be received that someone has been appointed to maintain the private drainage network.

The surface water network has been designed to accommodate the 1 in 100 year storm rainfall event plus an allowance for 40% climate change particular to the requirements of the site. As the flows are generally being attenuated on site and within SuDS features there will be a period of time after storm events where the network is still partially or fully surcharged and is draining down. Where this surcharging is still present after 48hrs appropriate action should be taken as noted below.

It is recommended that the drainage system is inspected as a minimum twice a year, with the system also being inspected after any major storm event.

Significant sediment deposition is likely in areas used for storage, so a post clean-up operation may be required including the removal of litter, vegetation, sewerage debris and larger objects.

Copyright © 2023 Curtins Consulting Ltd

Long-term management practices include monthly sweeping of external paved areas. The sweeping program will remove sand and contaminants directly from paved surfaces before they become mobilised during storm events and transported to the drainage system.

During the winter months, drainage features such as gullies and channels should be cleared of ice, snow, debris or litter.

Sediment/material removal should be undertaken in consultation with the environmental regulator to confirm appropriate protocols; especially where run-off is taken from potentially contaminated areas such as the filter drains and the upstream/downstream chambers.

4.3 Inspection, Manhole and Catchpit Chambers

The locations of the chambers are to be indicated on Curtins As Built Drainage Drawings once as built information is provided.

Access points have been located at the head of each run, at a change in direction and at a change of pipe size in accordance with Building Regulations Part H.

The appropriate barriers and signage should be installed during any opening of manholes to warn site users/pedestrians.

When accessing chambers, the latest Health and Safety legislation should be adhered to.

The appropriate health and safety equipment must be used when accessing manholes. Confined space certificates must be held by any personnel entering a manhole and the appropriate permits should be obtained from the Facilities Maintenance Manager prior to any access.

Sediment\material removal should be undertaken in consultation with the environmental regulator to confirm appropriate protocols; especially where run-off is taken from potentially contaminated areas.

Maintenance Schedule	Required Action	Frequency
Monitoring (to be undertaken more regularly within the first year of operation and adjusted as required)	Initial inspection should be provided as post construction CCTV survey.	N/A
	Inspect for evidence of poor operation via water level in chambers. If required take remedial action.	3-monthly, 48 hours after large storms.
Occasional maintenance	Check and remove large vegetation growth near pipe runs.	6 monthly
Remedial actions	Rod through poorly performing runs as initial remediation.	As required.
	If continued poor performance jet and CCTV survey poorly performing runs.	As required.
	Seek advice as to remediation techniques suitable for the type of performance issue and location.	As required If above does not improve performance.

Copyright © 2023 Curtins Consulting Ltd

4.4 Pipes

The locations of the pipes are to be indicated on Curtins As Built Drainage Drawings once as built information is provided.

Pipes are proprietary products, and the materials can vary across the site and as such where used the manufacture's recommendations should be followed. Regardless of the product used the pipes are fully compliant with the Curtins drainage specification.

Pipes are intended to be the main conveyance across the development and where oversized they form the attenuation volume required by the limitation of the discharge rate. They are intended to be dry except for during rainfall events. These have been designed to be self-cleansing where possible for smaller diameter pipes. For larger diameter pipes the risk is reduced due to the overall pipe size.

Access for maintenance is provided through access chambers and manholes.

Regular inspection and maintenance is important to identify areas which may have been obstructed/clogged and may not be drainage correctly thus exposing the development to a greater level of flood risk.

Maintenance Schedule	Required Action	Frequency
Monitoring (to be undertaken more regularly within the first year of operation and adjusted as required).	Initial Inspection should be provided as post construction CCTV survey.	N/A
Regular maintenance\ inspection	Inspect for evidence of poor operation via water level in chambers. If required, take remedial action.	3-monthly, 48 hours after large storms.
	Check and remove large vegetation growth near pipe runs.	Monthly or as required
Remedial Action	Rod through poorly performing runs as initial remediation.	As required.
	If continued poor performance jet and CCTV survey poorly performing runs.	As required.
	Seek advice as to remediation techniques suitable for the type of performance issue and location.	As required If above does not improve performance.

Copyright © 2023 Curtins Consulting Ltd

Regular maintenance\ inspection	Brushing and Vacuuming	Three times/year at end of winter, mid-summer, after autumn leaf fall, or as required based on site specific observations of clogging or manufacturers' recommendations.
Occasional maintenance	Stabilise and mow contributing and adjacent areas.	As required and as per landscape architect's specification.
	Removal of weeds	As required.
Remedial Action	Remediate any landscaping which, through vegetation maintenance or soil slip, has been raised to within 50 mm of the level of the paving.	As required.
	Remedial work to any depressions, rutting and cracked or broken blocks considered detrimental to the structural performance or a hazard to users.	As required.
	Rehabilitation of surface and upper sub-structure. This could include replacement of the jointing and bedding material. The upper geotextiles layer may also need replacing if clogged and Terram 1000 has a life span of 25 years.	As required (if infiltration performance is reduced as a result of significant clogging).

Copyright © 2023 Curtins Consulting Ltd

4.5 Attenuation Tanks

The location of the attenuation tanks are to be indicated on Curtins As Built Drainage Drawings once as built information is provided.

The attenuation tanks are geocellular units and are intended for storage of surface water run-off from the site up to and including the 1 in 100 year plus 40% climate change event to reduce the rate of run-off into the downstream network and to minimise flood risk.

The geocellular units are proprietary products and therefore manufacturer's recommendations should also be taken into consideration.

Access for maintenance has been provided by catchpit manhole chambers upstream and downstream of the tank. Vents are also provided to the upstream manholes.

Manufacturers information is enclosed in Appendix B.

Maintenance Schedule	Required Action	Frequency
Monitoring (to be undertaken more regularly within the first year of operation and adjusted as required).	Inspect inlets, outlets and overflows for blockages, and clear if required. If faults persist jetting and CCTV survey may be required.	Monthly and after large storms.
Regular maintenance\ inspection	Inspect and identify any areas that are not operating correctly. If required, take remedial action.	Monthly for 3 months, then six monthly.
	Debris removal from catchment surface (where may cause risks to performance).	Monthly
	Remove sediment from pre-treatment structures.	Annually (or as required after heavy rainfall events)
Remedial Actions	Repair/rehabilitation of inlets, outlets and overflows.	As required.

Copyright © 2023 Curtins Consulting Ltd

4.6 Pump Stations

The location of the pumps is to be indicated on Curtins As Built Drainage Drawings once as built information is provided.

The pumps are intended for flood control and flow restriction.

Access for maintenance has been provided by locating the pumps within a manhole chamber.

Manufacturers information is enclosed in Appendix B.

Maintenance Schedule	Required Action	Frequency
Monitoring (to be undertaken more regularly within the first year of operation and adjusted as required).	Inspect inlets for blockages, and clear if required. If faults persist jetting and CCTV survey may be required.	Monthly and after large storms.
Regular maintenance\ inspection	Inspect and identify any areas that are not operating correctly. If required, take remedial action.	Monthly for 3 months, then six monthly.
	Debris removal from catchment surface (where may cause risks to performance).	Monthly
	Remove sediment from pre-treatment structures and flow control chambers.	Annually (or as required after heavy rainfall events)
Remedial Actions	Repair/rehabilitation of inlets.	As required.

Copyright © 2023 Curtins Consulting Ltd

Appendix A

United Utilities Section 106 Approvals

Copyright © 2023 Curtins Consulting Ltd

S106 Part 1 'Application to connect to a public sewer' Approval Notice

	02776887
Applicant details	
Applicant name	**Marta Wolska**
Applicant address *(including postcode)*	**Curtins Consulting** **Merchant Exchange** **17-19 Whitworth Street West** **Manchester M1 5WG**
Applicant email	**marta.wolska@curtins.com**
Site details: The site / property which is proposed for connection to the public sewer	
	City Police Headquarters, Application 1 **Southmill Street,** **Manchester,** **M2 5GB**

APPROVED

Your application for connection to the public sewer has been approved, to be made via a new connection:

To a private drain	☐	You may appoint your contractor and advise your appointed building control body (who should inspect the work). United Utilities should be advised when this work is complete.
Direct to the public sewer	☒	**<u>Further action required</u>** You may now appoint an appropriately qualified contractor. Your appointed contractor is responsible for obtaining authorisation to work on a public sewer. (The S106 Part 2 application form **'Request for permission to work on a public sewer'** is available on our website; unitedutilities.com).

Mode of connection approved	**New manhole**					
Sewer connection type	Foul	☒	Surface water	☐	Combined	☐

This approval is valid for 12 months from the date below.
This approval does not grant access to third party land, permission should be sought if required between applicant and land owner
If the new connection renders access unsafe or is otherwise detrimental to the manhole or sewer, a new/upgraded manhole will be requested.

Comments

Altered Premise Application 1

Approval for the 150mm foul only connection to the existing 450mm combined sewer in Bootle street via a new Manhole

The new manhole must be constructed in line with United Utilities standard details with the appropriate openings, ring size, benching/pipe configuration, channels and landing. Please ensure a plan of your proposals is submitted with your contractors Part 2 application

For low-lying sites, (where the ground level of the site or the level of a basement is below the ground level at the point where the drainage connects to the public sewer), care should be taken to ensure that the property is not at increased risk of flooding. If these circumstances exist it could affect the detailed design of your site and result in the need to incorporate appropriate mitigating measures in your drainage scheme.

Please note, if you are proposing to connect to an existing, unchartered drain or sewer then it is the developers responsibility to confirm that it communicates with the Public Sewer
Connections may be made to private lateral drains or to existing neighbouring drain. A part 1 approval does not give permission to access third party land. The applicant must seek permission from the relevant land owner.

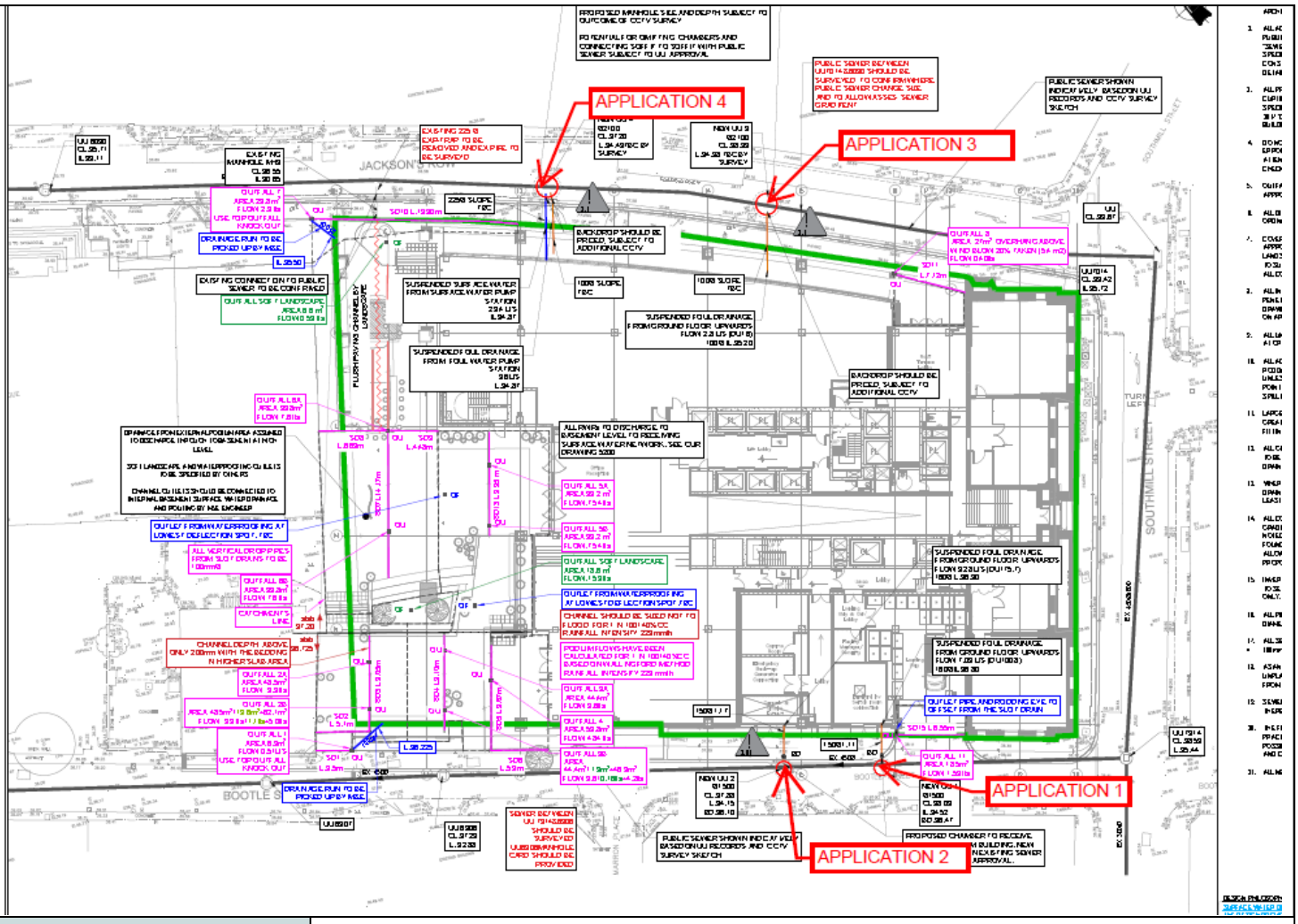

Development Support Technician	**Lynne Berry**
Contact number	**07881 034558**
Date	**06/10/2022**

S106 Part 1 'Application to connect to a public sewer' Approval Notice

	02777187
Applicant details	
Applicant name	**Marta Wolska**
Applicant address *(including postcode)*	**Curtins Consulting** **Merchant Exchange** **17-19 Whitworth Street West** **Manchester M1 5WG**
Applicant email	**marta.wolska@curtins.com**
Site details: The site / property which is proposed for connection to the public sewer	
	City Police Headquarters, Application 2 **Southmill Street,** **Manchester,** **M2 5GB**

APPROVED

Your application for connection to the public sewer has been approved, to be made via a new connection:

To a private drain	☐	You may appoint your contractor and advise your appointed building control body (who should inspect the work). United Utilities should be advised when this work is complete.
Direct to the public sewer	☒	**<u>Further action required</u>** You may now appoint an appropriately qualified contractor. Your appointed contractor is responsible for obtaining authorisation to work on a public sewer. (The S106 Part 2 application form **'Request for permission to work on a public sewer'** is available on our website; unitedutilities.com).

Mode of connection approved	**New manhole**					
Sewer connection type	Foul	☒	Surface water	☐	Combined	☐

This approval is valid for 12 months from the date below.
This approval does not grant access to third party land, permission should be sought if required between applicant and land owner
If the new connection renders access unsafe or is otherwise detrimental to the manhole or sewer, a new/upgraded manhole will be requested.

Comments

<u>Altered Premise Application 2</u>

approval for the 150mm foul only connection to the existing 450mm combined sewer in Bootle Street via a new manhole

The new manhole must be constructed in line with United Utilities standard details with the appropriate openings, ring size, benching/pipe configuration, channels and landing. Please ensure a plan of your proposals is submitted with your contractors Part 2 application

For low-lying sites, (where the ground level of the site or the level of a basement is below the ground level at the point where the drainage connects to the public sewer), care should be taken to ensure that the property is not at increased risk of flooding. If these circumstances exist it could affect the detailed design of your site and result in the need to incorporate appropriate mitigating measures in your drainage scheme.

Please note, if you are proposing to connect to an existing, unchartered drain or sewer then it is the developers responsibility to confirm that it communicates with the Public Sewer
Connections may be made to private lateral drains or to existing neighbouring drain. A part 1 approval does not give permission to access third party land. The applicant must seek permission from the relevant land owner.

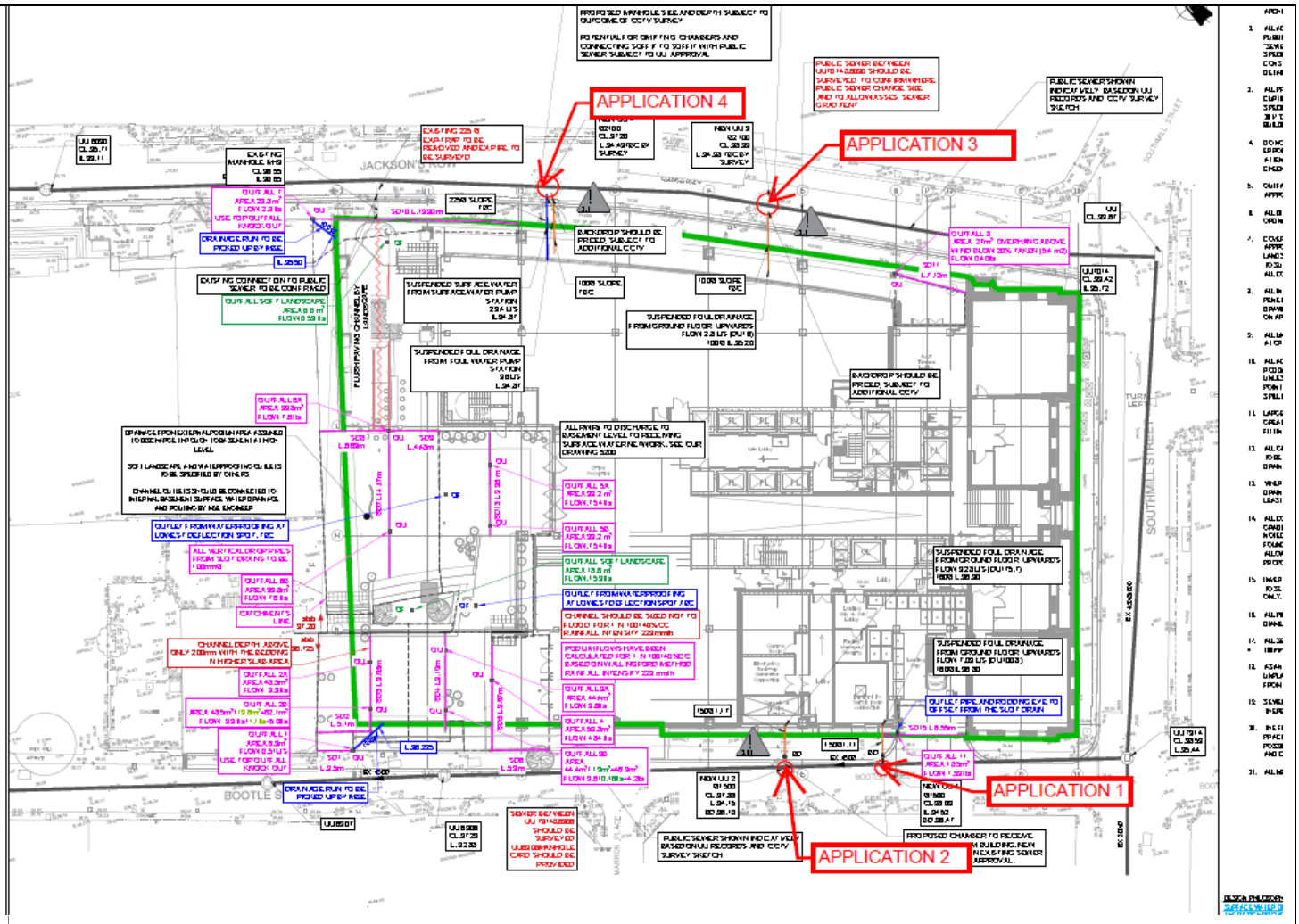

Development Support Technician	**Lynne Berry**
Contact number	**07881 034558**
Date	**06/10/2022**

S106 Part 1 'Application to connect to a public sewer' Approval Notice

	02777336
Applicant details	
Applicant name	**Marta Wolska**
Applicant address *(including postcode)*	**Curtins Consulting** **Merchant Exchange** **17-19 Whitworth Street West** **Manchester M1 5WG**
Applicant email	**marta.wolska@curtins.com**
Site details: The site / property which is proposed for connection to the public sewer	
	City Police Headquarters, Application 3 **Southmill Street,** **Manchester,** **M2 5GB**

APPROVED

Your application for connection to the public sewer has been approved, to be made via a new connection:

To a private drain	☐	You may appoint your contractor and advise your appointed building control body (who should inspect the work). United Utilities should be advised when this work is complete.
Direct to the public sewer	☒	**<u>Further action required</u>** You may now appoint an appropriately qualified contractor. Your appointed contractor is responsible for obtaining authorisation to work on a public sewer. (The S106 Part 2 application form **'Request for permission to work on a public sewer'** is available on our website; unitedutilities.com).

Mode of connection approved	**New manhole**					
Sewer connection type	Foul	☒	Surface water	☐	Combined	☐

This approval is valid for 12 months from the date below.
This approval does not grant access to third party land, permission should be sought if required between applicant and land owner
If the new connection renders access unsafe or is otherwise detrimental to the manhole or sewer, a new/upgraded manhole will be requested.

Comments

<u>Altered Premise Application 3</u>

Approval for the 100mm foul connection to the existing 375mm combined sewer in Jackson Row via a new manhole

The new manhole must be constructed in line with United Utilities standard details with the appropriate openings, ring size, benching/pipe configuration, channels and landing. Please ensure a plan of your proposals is submitted with your contractors Part 2 application

For low-lying sites, (where the ground level of the site or the level of a basement is below the ground level at the point where the drainage connects to the public sewer), care should be taken to ensure that the property is not at increased risk of flooding. If these circumstances exist it could affect the detailed design of your site and result in the need to incorporate appropriate mitigating measures in your drainage scheme.

Please note, if you are proposing to connect to an existing, unchartered drain or sewer then it is the developers responsibility to confirm that it communicates with the Public Sewer
Connections may be made to private lateral drains or to existing neighbouring drain. A part 1 approval does not give permission to access third party land. The applicant must seek permission from the relevant land owner.

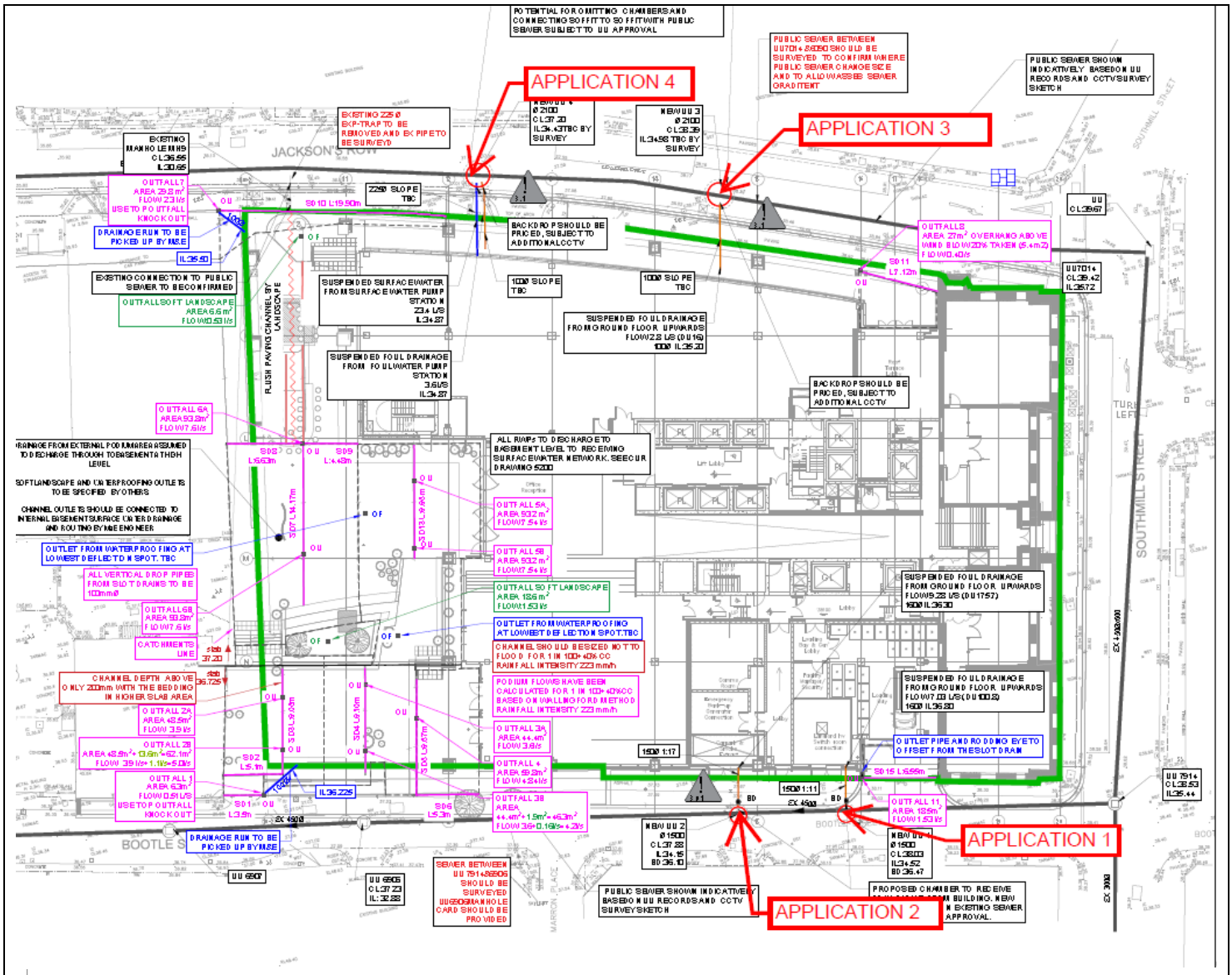

Development Support Technician	**Lynne Berry**
Contact number	**07881 034558**
Date	**06/10/2022**

S106 Part 1 'Application to connect to a public sewer' Approval Notice

	02777336
Applicant details	
Applicant name	**Marta Wolska**
Applicant address *(including postcode)*	**Curtins Consulting** **Merchant Exchange** **17-19 Whitworth Street West** **Manchester M1 5WG**
Applicant email	**marta.wolska@curtins.com**
Site details: The site / property which is proposed for connection to the public sewer	
	City Police Headquarters, Application 4 **Southmill Street,** **Manchester,** **M2 5GB**

APPROVED

Your application for connection to the public sewer has been approved, to be made via a new connection:

To a private drain	☐	You may appoint your contractor and advise your appointed building control body (who should inspect the work). United Utilities should be advised when this work is complete.
Direct to the public sewer	☒	**<u>Further action required</u>** You may now appoint an appropriately qualified contractor. Your appointed contractor is responsible for obtaining authorisation to work on a public sewer. (The S106 Part 2 application form **'Request for permission to work on a public sewer'** is available on our website; unitedutilities.com).

Mode of connection approved	**New manhole**					
Sewer connection type	Foul	☒	Surface water	☒	Combined	☐

This approval is valid for 12 months from the date below.
This approval does not grant access to third party land, permission should be sought if required between applicant and land owner
If the new connection renders access unsafe or is otherwise detrimental to the manhole or sewer, a new/upgraded manhole will be requested.

Comments

<u>Altered Premise Application 4</u>

Approval for the 100mm foul and the 225mm surface water connection to the existing 450mm combined sewer in Jackson Row via a new manhole
with a flow control restricted to 23.4l/s

The new manhole must be constructed in line with United Utilities standard details with the appropriate openings, ring size, benching/pipe configuration, channels and landing. Please ensure a plan of your proposals is submitted with your contractors Part 2 application

For low-lying sites, (where the ground level of the site or the level of a basement is below the ground level at the point where the drainage connects to the public sewer), care should be taken to ensure that the property is not at increased risk of flooding. If these circumstances exist it could affect the detailed design of your site and result in the need to incorporate appropriate mitigating measures in your drainage scheme.

Please note, if you are proposing to connect to an existing, unchartered drain or sewer then it is the developers responsibility to confirm that it communicates with the Public Sewer
Connections may be made to private lateral drains or to existing neighbouring drain. A part 1 approval does not give permission to access third party land. The applicant must seek permission from the relevant land owner.

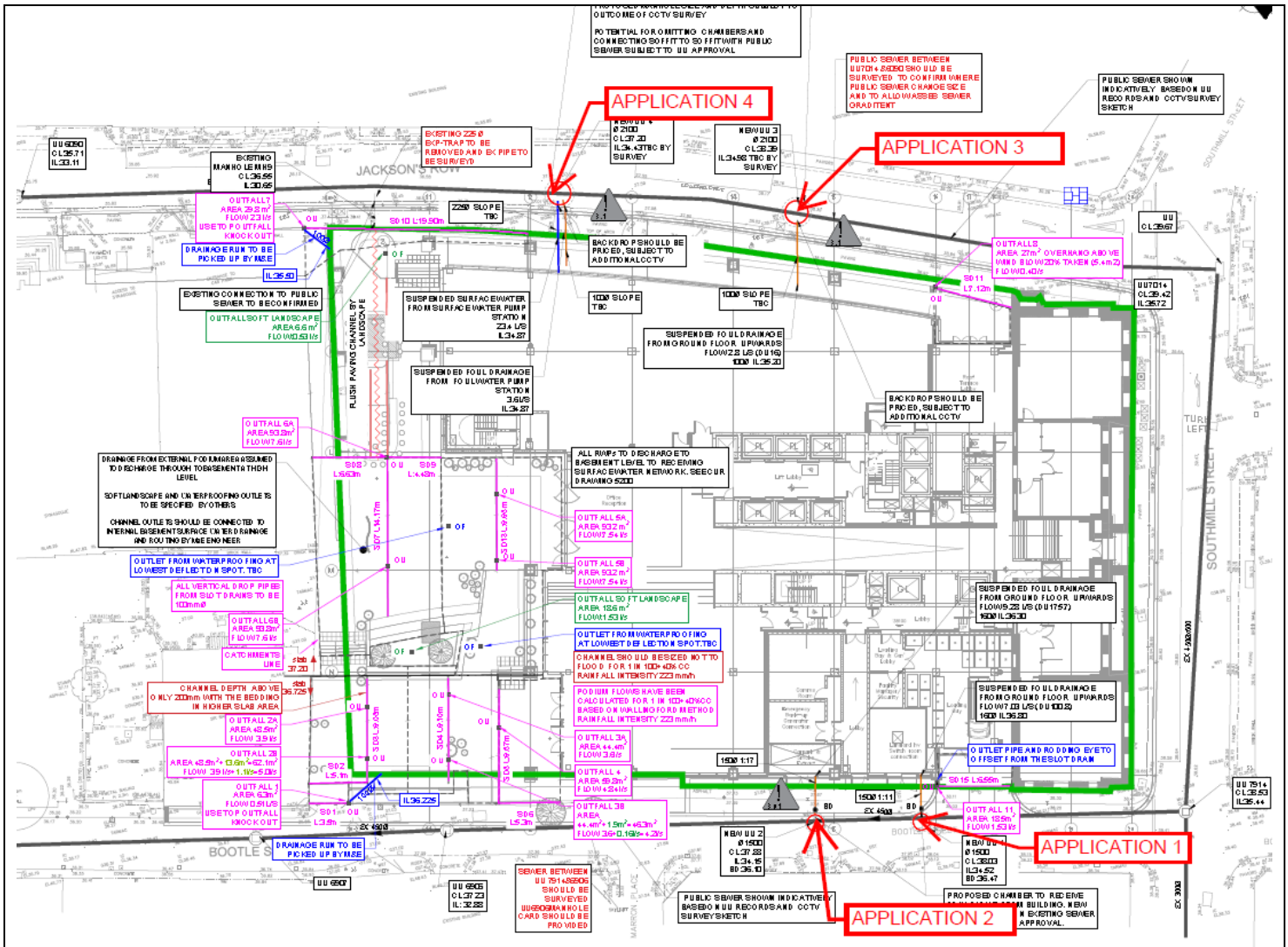

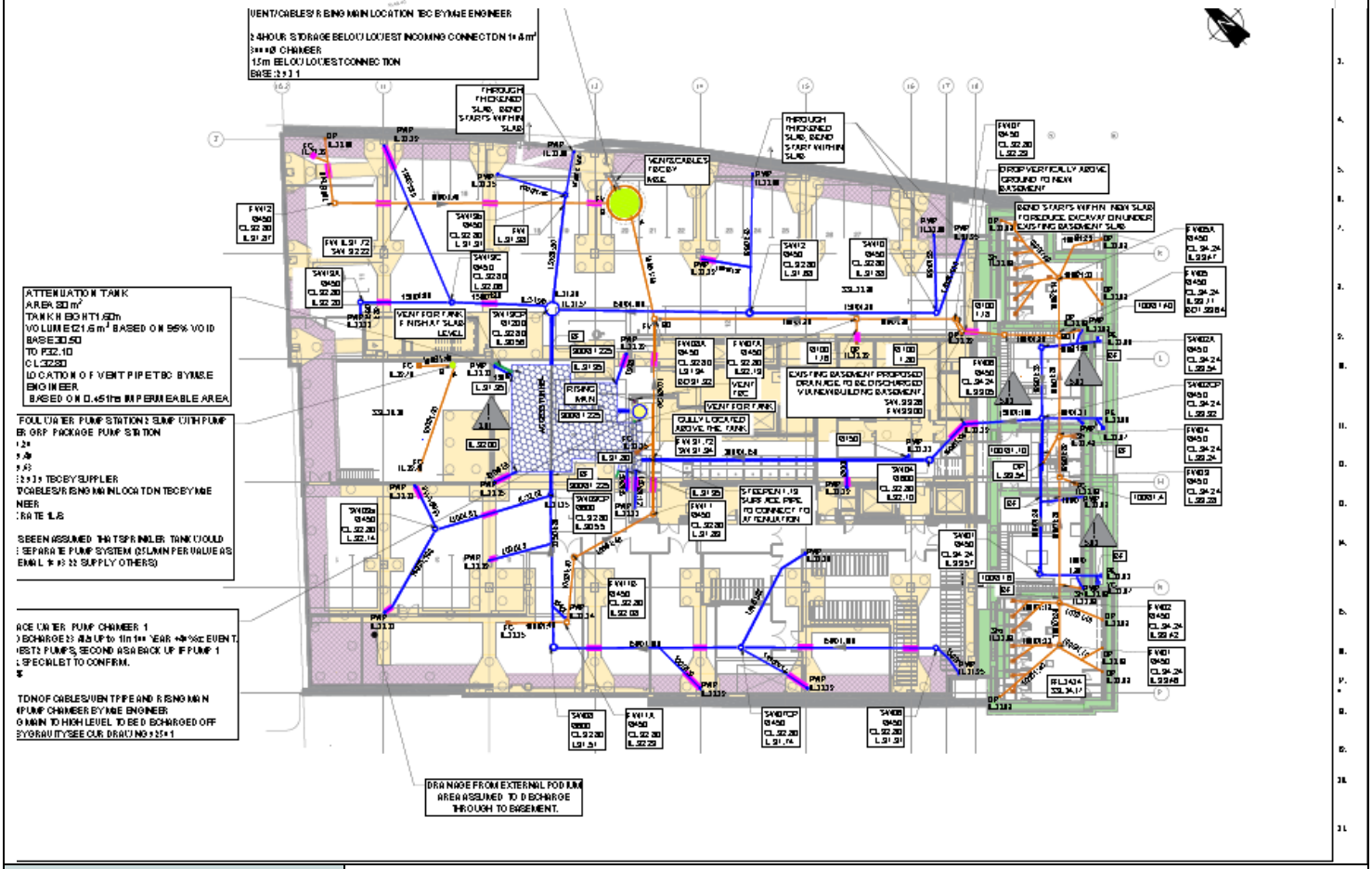

Development Support Technician	**Lynne Berry**
Contact number	**07881 034558**

Date	**06/10/2022**

Appendix B

Kingspan Pump Manufacturers Information

Wavin AquaCell Attenuation Tank Manufacturers Information

Copyright © 2023 Curtins Consulting Ltd

ITEM NO.	PART NUMBER	DESCRIPTION	QTY.
1	DPSCASEEA-019	DPSCASE 0.9 x 1.5m 0.7m 110P 180 & 135	1
2	DPSINTE2JB	DPSINT for Ø0.9m Twin Sewage Pump Chamber	1
3	DPSPUMPE2J	DPSPUMP Assembly - Pump Type J	1
4	010646	Standard Pallet 1000 x 1200	1

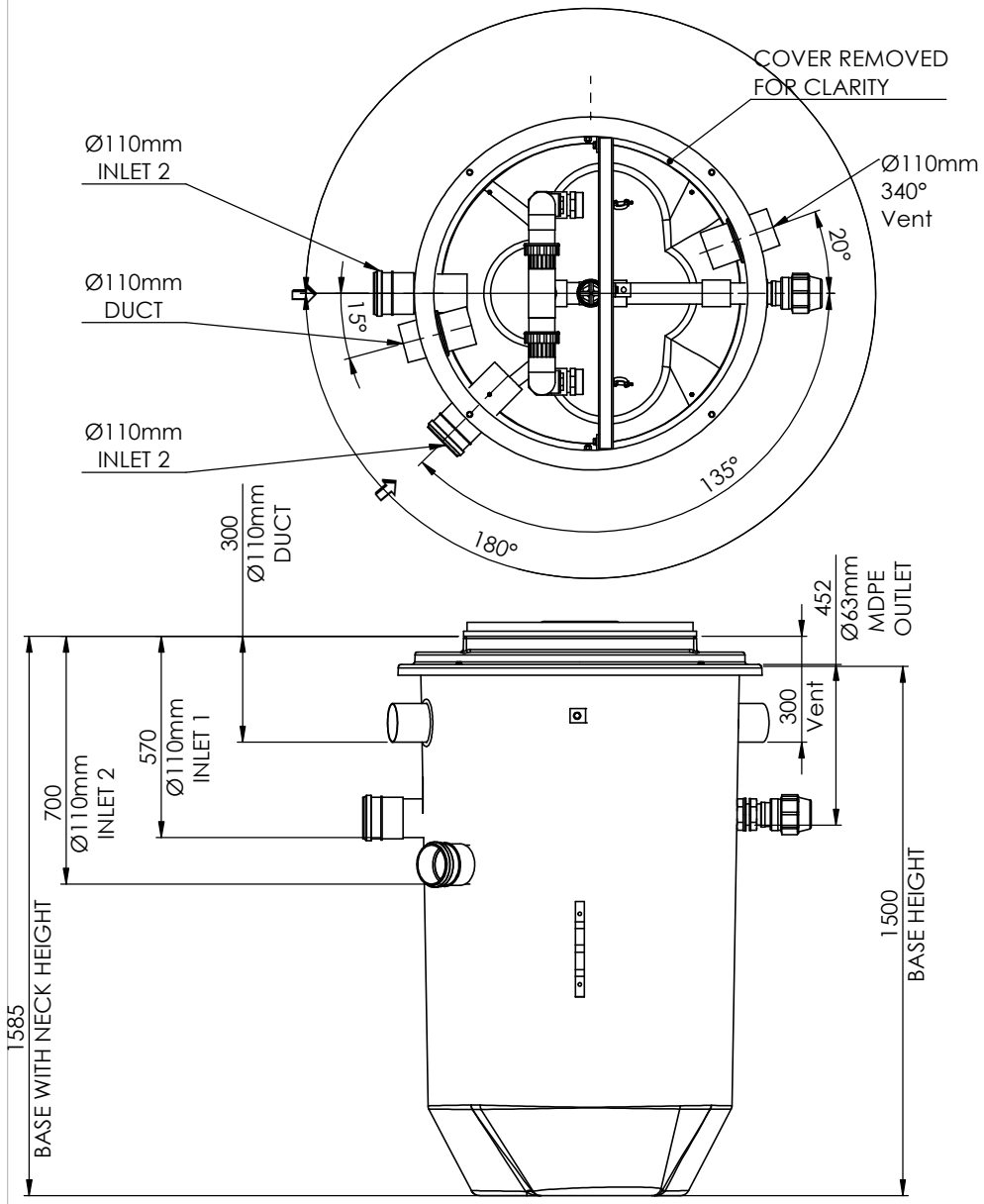

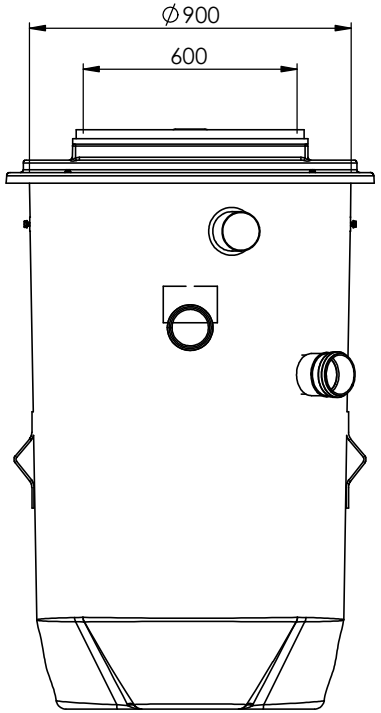

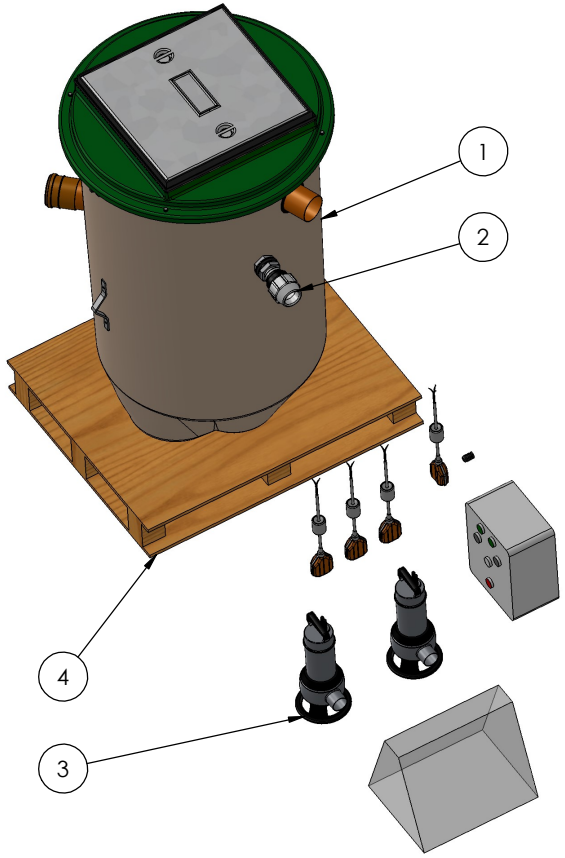

Please Check with Kingspan Water & Energy For The Latest Issue Of This Drawing				
Issue	Date	Drawn by	Approved by	Description
02	10/02/23	A.S		Vent Added
01	27/01/23	A.S		Initial Issue - MTO Request

LN Number :1012629	Tolerance (unless stated) :
Finish :	Thickness :
Weight :	Surface Area : m²
Modelled By : A.S	Material :

Drawing : 63068-KWE-ZZ-PL-DR-Y-5230 Page 1 of 1

0.9 x 1.5m PUMP CHAMBER 2x110 INLET

All Dimensions In mm

Scale: Do Not Scale

Third Angle Projection

A:\Wastewater\Engineering\Drawing Data\03 - MTO Specials\DPS - Pump Chambers\DPSE (Ø0.9 x 1.5m GRP)\DPSE--S2JB-AK-005\DPSE--S2JB-AK-005

Kingspan Water & Energy reserve the right to alter the details of this drawing without prior notice. This drawing is copyright and may not be reproduced or used without the written permission of Kingspan Water & Energy

Kingspan

ITEM NO.	PART NUMBER	DESCRIPTION	QTY.
1	PUINT18352G16N	PU Internal for Ø1.8m Twin Pump Chamber	1
2	013612	4 inch PVCu Pipe - 200mm	2
3	PULABELK	Label Kit	1
4	PUCASE1835B	PU 1.8M DIA CHAMBER X 3.5M DEEP	1
5	013556	Ø315 PVC-u Pipe Class C 300mm Long	1
6	012873	Ø315 PVC-U socket	1

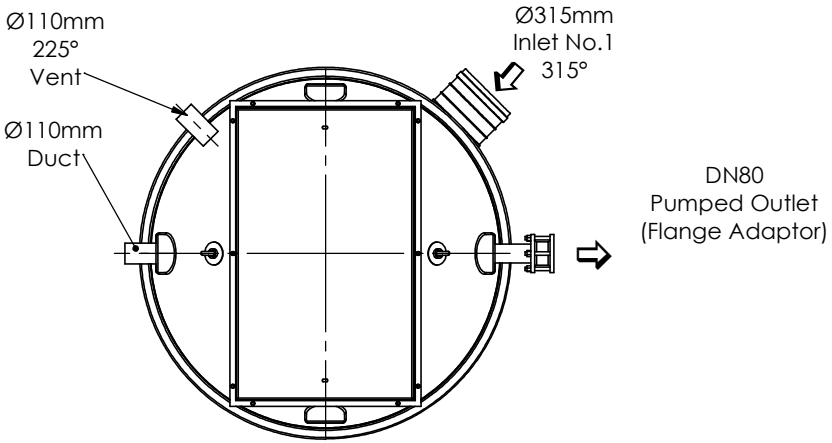

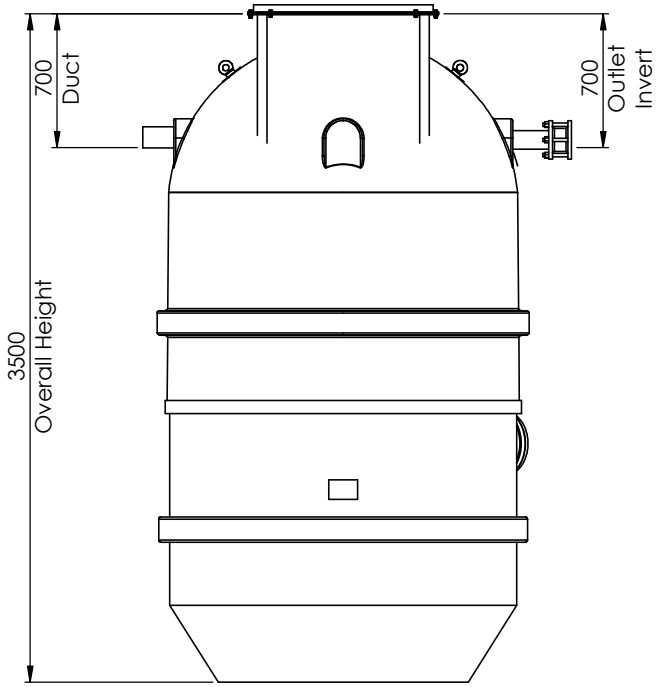

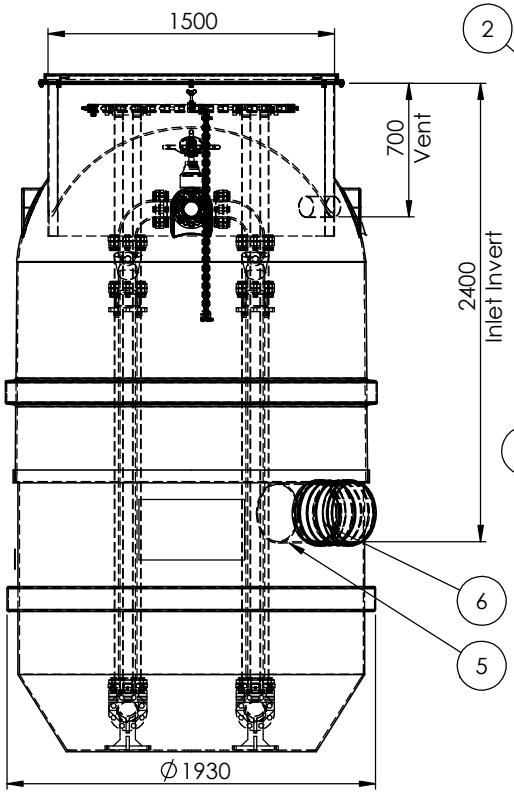

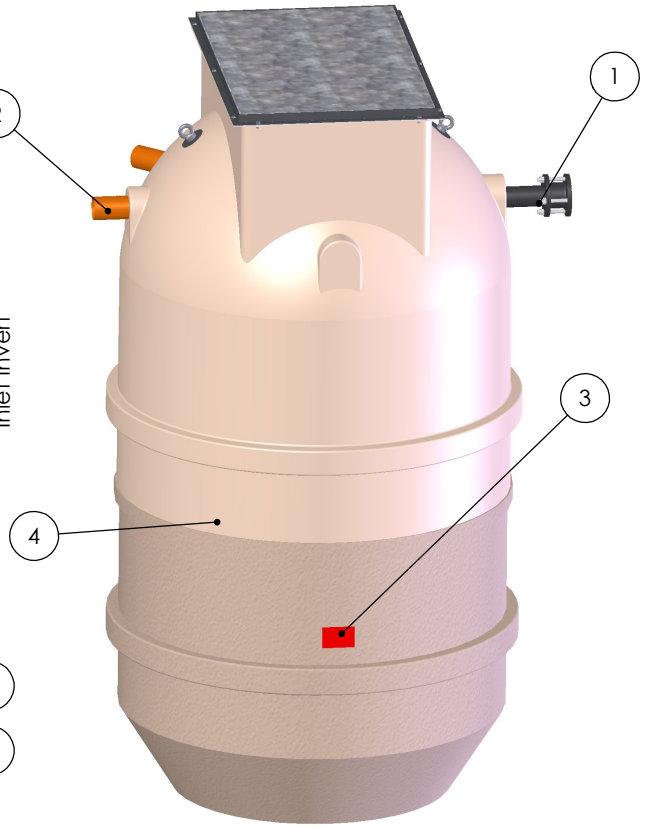

Please Check with Kingspan Water & Energy For The Latest Issue Of This Drawing				
Issue	Date	Drawn by	Approved by	Description
B	10/02/23	A.S		Vent Added
A	27/01/23	A.Sullivan		Initial Issue - MTO Request

All Dimensions In mm

Scale: Do Not Scale

Third Angle Projection

A:\Wastewater\Engineering\Drawing Data\03 - MTO Specials\PU - Pump chambers\PU18\PU1835 (PU18E)\PU18E24S2G--NCHGP-01\PC18E24S2G--NCHGP-01

LN Number: 1012632	Tolerance (unless stated) :
Finish :	Thickness : n/a
Weight : 712.24 Kg	Surface Area : m²
Modelled By : A.Sullivan	Material : Various

Kingspan Water & Energy reserve the right to alter the details of this drawing without prior notice. This drawing is copyright and may not be reproduced or used without the written permission of Kingspan Water & Energy

Drawing : 63068-KWE-ZZ-PL-DR-Y-5231

Ø1.8m x 3.5m MTO Pump Chamber Assembly

Kingspan

ITEM NO.	PART NUMBER	DESCRIPTION	QTY.
1	PUCASE2640B-COV	PU Ø2.6m Pump Chamber x 4.0m Deep	1
2	013612	4" PVCu Pipe - 300mm	2
3	PUINT26402G16C	PU Internal for Ø2.6m Twin Pump Chamber	1
4	013612	4 inch PVCu Pipe - 380mm	2
5	010290	4 Inch PVC-U Socket	2

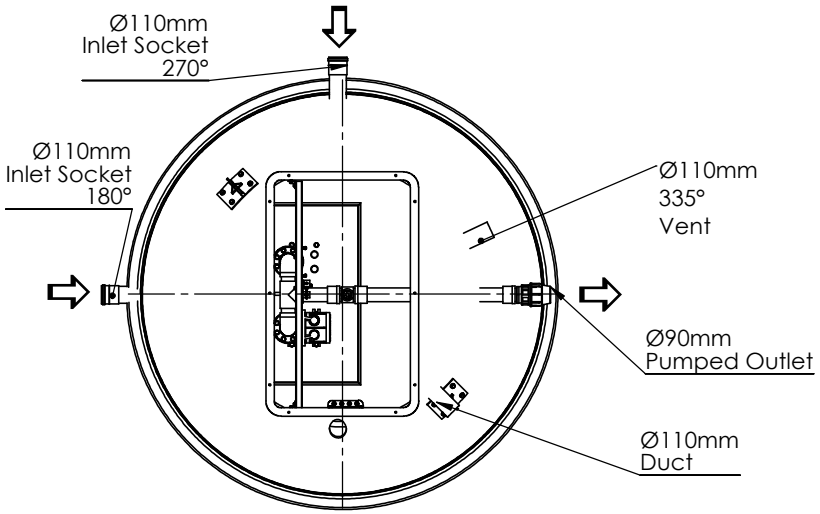

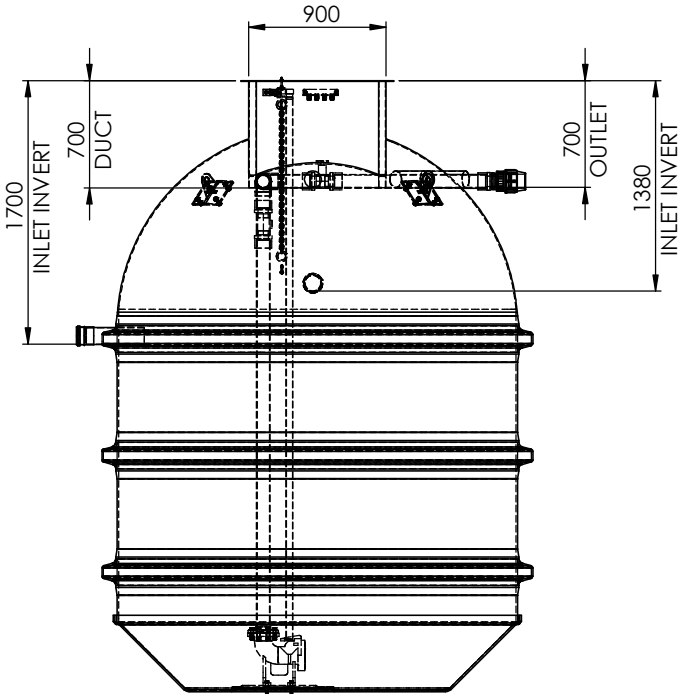

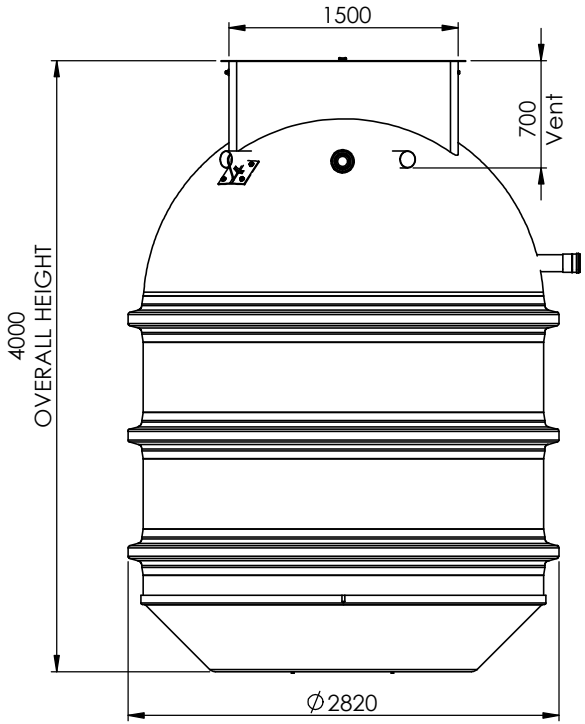

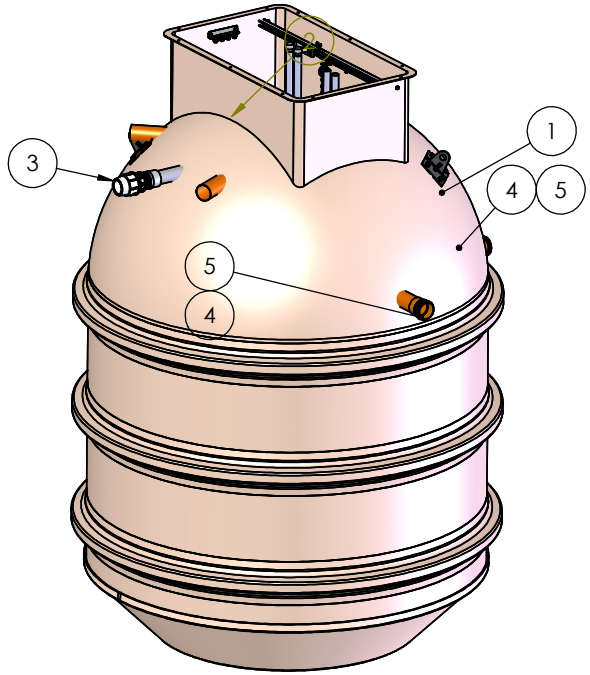

Please Check with Kingspan Water & Energy For The Latest Issue Of This Drawing				
Issue	Date	Drawn by	Approved by	Description
B	10/02/23	A.S		Duct Moved & Vent Added
C	16/02/23	A.S		Inlet Orientation Change

LN Number : 1012627	Tolerance (unless stated) :
Finish :	Thickness : n/a
Weight : 802.01 Kg	Surface Area : m²
Modelled By : A.S	Material : Various

Drawing : 63068-KWE-ZZ-PL-DR-Y-5232 Page 1 of 1

Ø2.6 X 4.0m Pump Chamber Assembly

All Dimensions In mm

Scale: Do Not Scale

Third Angle Projection

Kingspan Water & Energy reserve the right to alter the details of this drawing without prior notice. This drawing is copyright and may not be reproduced or used without the written permission of Kingspan Water & Energy

A:\Wastewater\Engineering\Drawing Data\03 - MTO Specials\PU - Pump chambers\PU26\PU2640 (PU26F)\PU26F--S2G47CC-AP-01\PC26F--S2G47CC-AP-01

Kingspan

Load Class		A 15	B 125	C 250	D 400*
Minimum Dimensions (mm)	X	100	150	150	200
	Y	Full Channel Height (Less Y2 where applicable)			
	Z	100	150	150	200
Maximum Dimensions (mm)	Y2	35	35	35	35
	Y3	100	60	60	60

* e.g. parking areas for all types of road vehicle.
Not suitable for carriageway of roads or industrial areas.

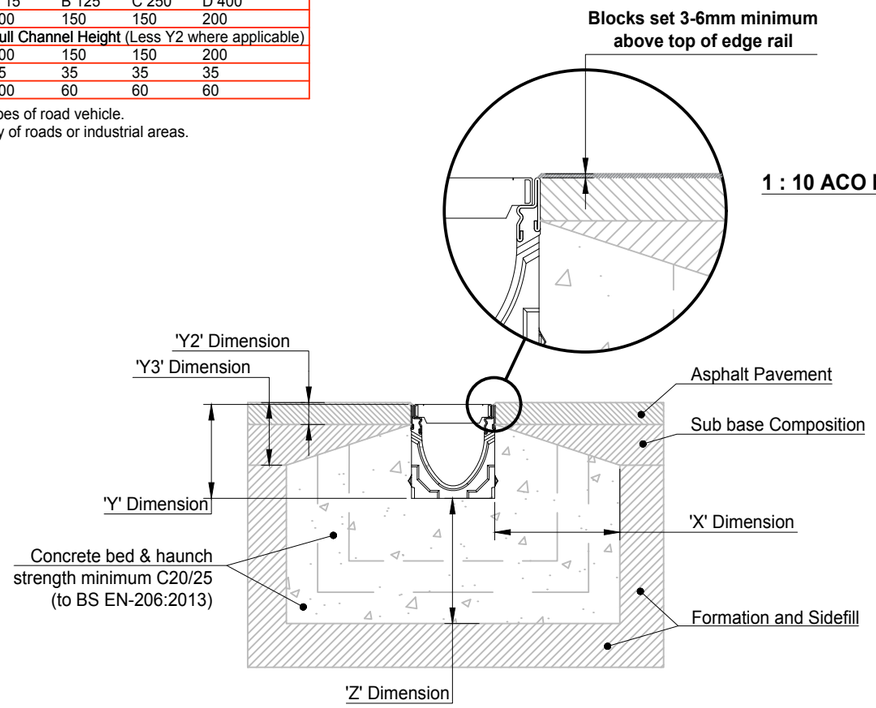

1 : 10 ACO MultiDrain Asphalt Pavement

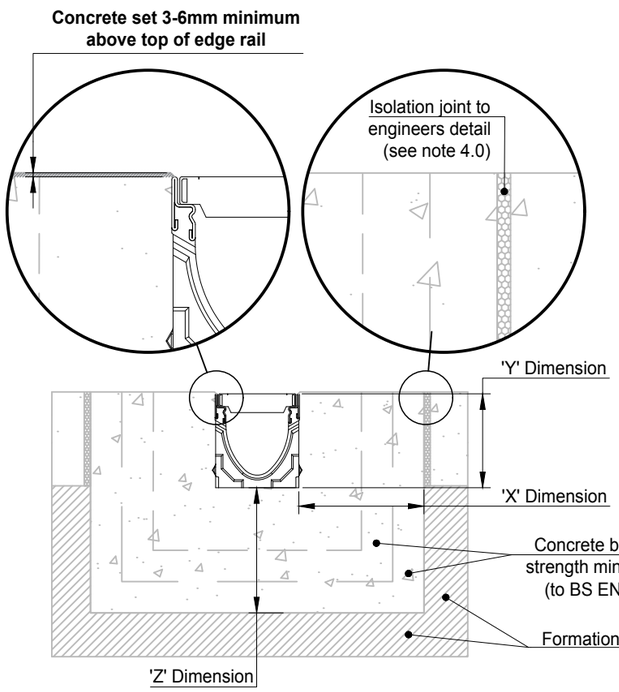

1 : 10 ACO MultiDrain Concrete Pavement

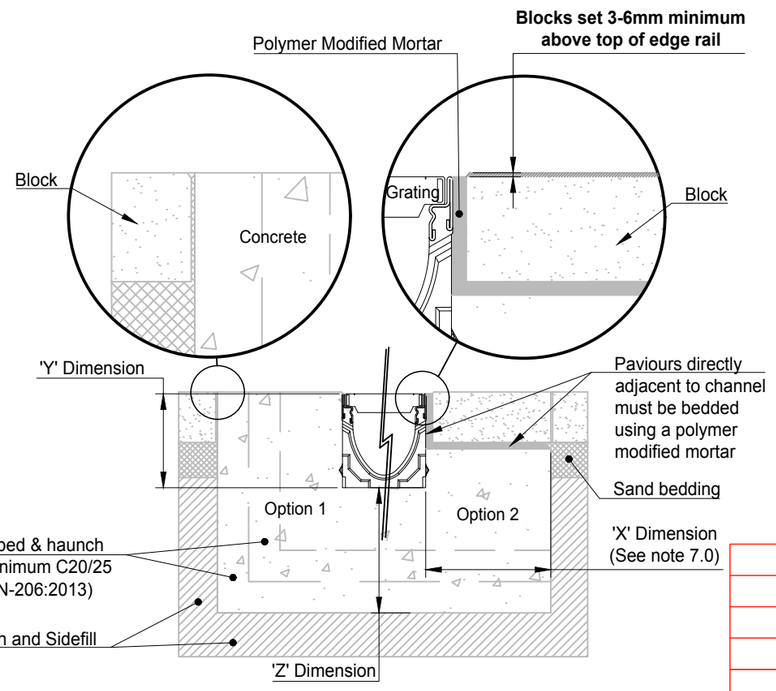

1 : 10 ACO MultiDrain Block Pavement (Option 1 and 2)

NBS Specification:
ACO MultiDrain® MD should be specified in section Q10:180. Assistance in completing this clause can be found in ACO Technologies product entries in NBS Plus, or a model specification can be downloaded from www.aco.co.uk. For further assistance, contact the ACO Water Management Design Services Team.

Best Practice and Workmanship:
ACO can give guidance with respect to the most suitable methods of installation for each of the products in the ACO MultiDrain® MD range. ACO MultiDrain® MD should be installed using levels of workmanship that accord with the National Code of Practice (UK: BS8000-0:2014) and in keeping with BS EN 1433:2002 (Drainage channels for vehicular and pedestrian areas).

Detailed installation statements and methodologies will vary for all sites as each will have different aspects deserving particular consideration, consequently the relevant approvals should be sought from the consulting engineer and/or the installer.

1.0 Load Class
Installation recommendations shown are ACO minimum recommendations for BS EN 1433:2002 load class requirements.

2.0 Ground Conditions
The long term performance of a channel installation to sustain vertical and lateral loads depends upon A) ground conditions B) stability of the adjacent pavement and C) a durable concrete bed and surround. The recommended installation detail may require the minimum dimensions to be revised to achieve site specific load class requirements (referred to in 1.0 above).

3.0 Cutting and Jointing
Mitre joints are formed by cutting the channels to the required angle and butting them together with appropriate sealant (e.g. Sikaflex 11FC or similar) or ACO Repair Kit. Where possible 90° joints and T's should be formed so that gratings do not have to be cut. Angles can be formed by connecting them using proprietary PVCu pipework attached to ACO inlet/outlet endcaps. For further details please contact ACO Design Services Team.
Note: For Load Classes higher than C 250, mitred joints are not recommended in vehicular areas. Where requested ACO can custom manufacture angled junctions to order.

4.0 Isolation Joints
The channel must be isolated from the surrounding environment. An isolation joint must be positioned up to 1500mm from the channel wall. Any dowel bars must be located no nearer than 150mm from the channel wall. Other isolation joints in surrounding slab must be continued through the channel. Additional crack control may be required to comply with specifier requirements.

5.0 Installation into in-situ Slab
Where a channel is to be installed into an existing concrete slab it is necessary to cut a suitably sized pocket in the slab. The channel will then need to be bedded in polymer modified mortar of 25mm minimum thickness (this may vary depending on the type of mortar used). Engineering advice may be necessary.

6.0 Temporary Installation
A channel installation is not complete until the final surfacing is laid. In any temporary condition, i.e. with the channel walls projecting above adjacent ground, site traffic should not cross channels. Loose boards, stone fill or cover plates will not protect the channel walls or grating. A temporary channel crossing should be formed by raising the ground level locally, to 3 - 6mm above top of edge rail, either side of a channel for a distance of 750 to 1000mm, to form ramps. Note that the channel load class should be adequate to carry the site traffic.

7.0 Block Pavements
The channel must be supported laterally. Blocks laid directly against a channel must be laid as a soldier course and restrained from movement by bedding securely on the concrete haunch e.g. by using a polymer modified mortar for bed and perpendicular joints (e.g. RONAFIX mortar mix C or similar). Blocks or slabs bedded on sand remote from the channel should be set at a higher level to compensate for possible settlement of the paving in service.

8.0 Grate Locking System
Gratings should be securely fixed to the channel, where required, using an appropriate grate lock system (where available).

9.0 Channel Protection
Avoid contact between compaction equipment and top of ACO channel edge rail. The installer must ensure that the finished surface level lies above the top of the edge rail (by at least 3-6mm). Covering or protecting the grating, before concreting the haunch or laying blocks, removes the time and cost associated with cleaning the channel and grating of cement material and embedded stones. (Please note that ACO channels must be installed with the grating in place to prevent deformation of the channel).

10.0 Watertight Installation to BS EN 1433:2002
Where ACO channel joints/fittings and channel/pavement interfaces are to be sealed, an appropriate sealant should be used (e.g. Sikaflex 11FC or similar). Guidance on the necessary surface preparation and/or priming should be sought from the sealant manufacturer.

For Guidance a typical method of application follows:
- The end faces of the channels are to be sound and free from dust, oil, and grease, with any loose material or dirt removed, e.g. by mechanical wire brush. No water drops should be evident.
- Using a standard cartridge gun, apply the sealant evenly and with no flaws. The detail on the ends of a channel varies from one product to another:
- Products with a basically flat face - apply the sealant in a layer approximately 5mm thick to one face of the joint.
- Products with a sealing groove within the end face - apply the sealant in a bead of approximately 10mm diameter into the sealing groove.
- Products with a sealing groove following the inside shape of the channel - apply the sealant to the end face of the channel and to the sealant groove, such that when the joint is completed, the sealant will both cover the end face and fill the groove.
- The channel unit should be placed on the prepared concrete bedding and pressed against the previously placed channel unit. A sealed joint of approximately 1-2mm width should be formed between adjacent channel units.
- Excess sealant should be wiped from the inside face of the channel to leave a smooth finish.
- The sealant is to be left to cure for 24 hours, during which time the sealant should be kept as dry as possible.

Note: Galvanised steel and iron products have good corrosion resistance to concrete and mortar products but may experience corrosion if high chloride and/or sulphate content is present. Use only good quality concrete and consider using corrosion inhibitors where necessary. The use of protective coatings, such as paint, can minimise the risk of corrosion.

Version	Date	Description	Name
F	24.6.2016	Updated title block	TS
E	18.4.2016	Revised to comments 12/04/16	TS
D	24.3.2016	Revised to comments 15/03/16	TS
C	2.3.2016	General revisions	TS

ACO Technologies plc
ACO Business Park
Hitchin Road
Shefford
Bedfordshire
SG17 5TE, UK
Tel: 01462 816666
www.aco.co.uk

Drawing Number: 21819
Revision: F

Title: ACO MULTIDRAIN M100D/DS 0.0 CHANNEL INSTALLATION DETAIL DRAWING

Created by: IM	Released by: TS	Projection: ISO-A	Units: mm	Format: A3
Created at: 8.12.2015	Released at: 24.6.2016			Scale: 1 : 10
Replacement for: E1-E01-036-3-c	Replaced by:			Sheet: 1 of 1

Information contained in this drawing is copyright property of ACO Technologies plc. Any reproduction in part or whole without written permission of ACO Technologies plc is prohibited

Load Class		A 15	B 125	C 250	D 400*
Minimum Dimensions (mm)	X	100	150	150	200
	Y	Full Channel Height (Less Y2 where applicable)			
	Z	100	150	150	200
Maximum Dimensions (mm)	Y2	35	35	35	35
	Y3	100	60	60	60

* e.g. parking areas for all types of road vehicle.
Not suitable for carriageway of roads or industrial areas.

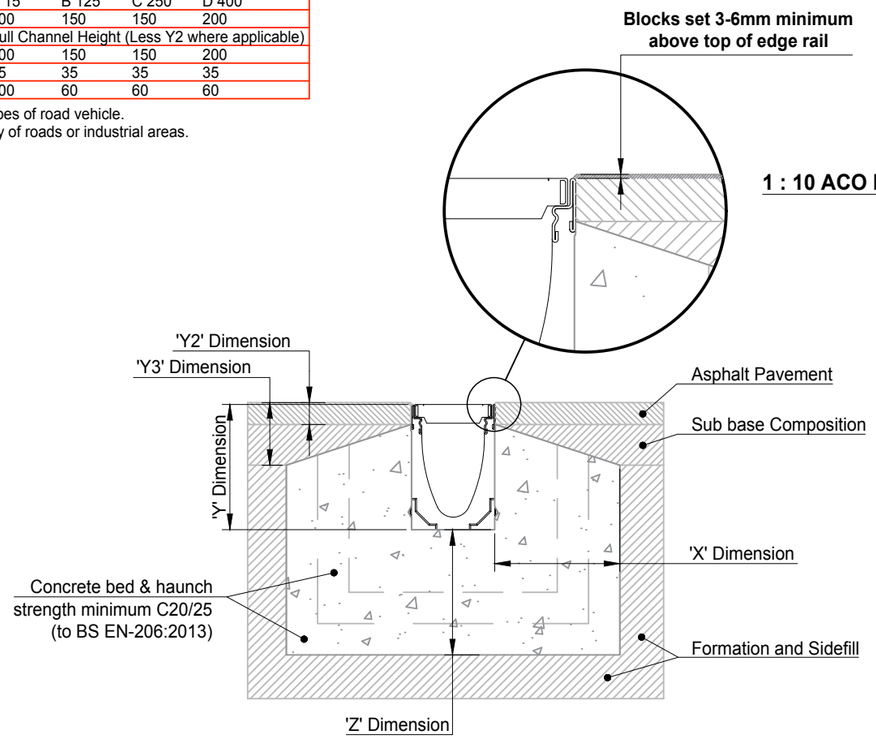

1 : 10 ACO MultiDrain Asphalt Pavement

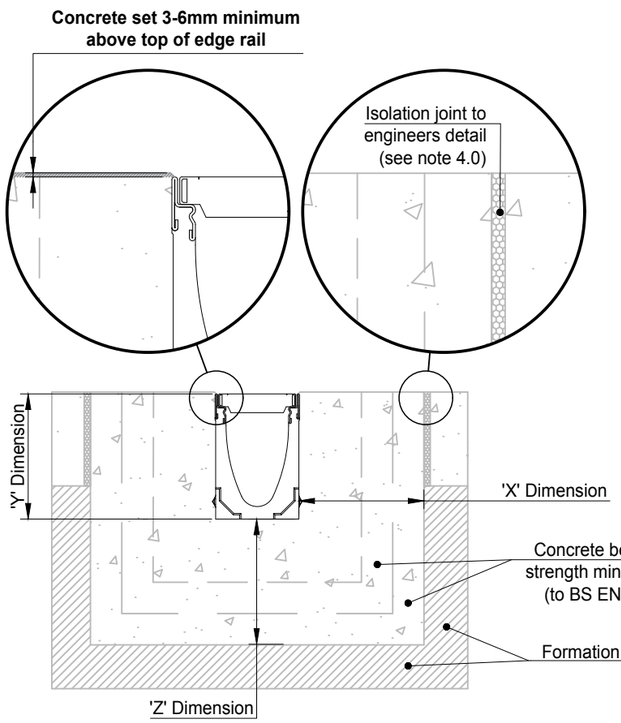

1 : 10 ACO MultiDrain Concrete Pavement

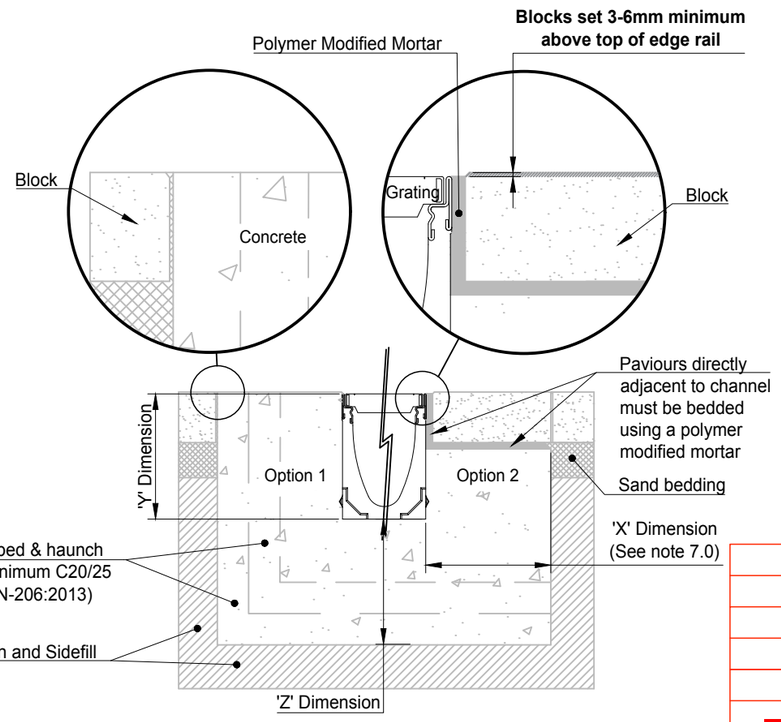

1 : 10 ACO MultiDrain Block Pavement (Option 1 and 2)

NBS Specification:
ACO MultiDrain® MD should be specified in section Q10:180. Assistance in completing this clause can be found in ACO Technologies product entries in NBS Plus, or a model specification can be downloaded from www.aco.co.uk. For further assistance, contact the ACO Water Management Design Services Team.

Best Practice and Workmanship:
ACO can give guidance with respect to the most suitable methods of installation for each of the products in the ACO MultiDrain® MD range. ACO MultiDrain® MD should be installed using levels of workmanship that accord with the National Code of Practice (UK: BS8000-0:2014) and in keeping with BS EN 1433:2002 (Drainage channels for vehicular and pedestrian areas).

Detailed installation statements and methodologies will vary for all sites as each will have different aspects deserving particular consideration, consequently the relevant approvals should be sought from the consulting engineer and/or the installer.

1.0 Load Class
Installation recommendations shown are ACO minimum recommendations for BS EN 1433:2002 load class requirements.

2.0 Ground Conditions
The long term performance of a channel installation to sustain vertical and lateral loads depends upon A) ground conditions B) stability of the adjacent pavement and C) a durable concrete bed and surround. The recommended installation detail may require the minimum dimensions to be revised to achieve site specific load class requirements (referred to in 1.0 above).

3.0 Cutting and Jointing
Mitre joints are formed by cutting the channels to the required angle and butting them together with appropriate sealant (e.g. Sikaflex 11FC or similar) or ACO Repair Kit. Where possible 90° joints and T's should be formed so that gratings do not have to be cut. Angles can be formed by connecting them using proprietary PVCu pipework attached to ACO inlet/outlet endcaps. For further details please contact ACO Design Services Team.
Note: For Load Classes higher than C 250, mitred joints are not recommended in vehicular areas. Where requested ACO can custom manufacture angled junctions to order.

4.0 Isolation Joints
The channel must be isolated from the surrounding environment. An isolation joint must be positioned up to 1500mm from the channel wall. Any dowel bars must be located no nearer than 150mm from the channel wall. Other isolation joints in surrounding slab must be continued through the channel. Additional crack control may be required to comply with specifier requirements.

5.0 Installation into in-situ Slab
Where a channel is to be installed into an existing concrete slab it is necessary to cut a suitably sized pocket in the slab. The channel will then need to be bedded in polymer modified mortar of 25mm minimum thickness (this may vary depending on the type of mortar used). Engineering advice may be necessary.

6.0 Temporary Installation
A channel installation is not complete until the final surfacing is laid. In any temporary condition, i.e. with the channel walls projecting above adjacent ground, site traffic should not cross channels. Loose boards, stone fill or cover plates will not protect the channel walls or grating. A temporary channel crossing should be formed by raising the ground level locally, to 3 - 6mm above top of edge rail, either side of a channel for a distance of 750 to 1000mm, to form ramps. Note that the channel load class should be adequate to carry the site traffic.

7.0 Block Pavements
The channel must be supported laterally. Blocks laid directly against a channel must be laid as a soldier course and restrained from movement by bedding securely on the concrete haunch e.g. by using a polymer modified mortar for bed and perpendicular joints (e.g. RONAFIX mortar mix C or similar). Blocks or slabs bedded on sand remote from the channel should be set at a higher level to compensate for possible settlement of the paving in service.

8.0 Grate Locking System
Gratings should be securely fixed to the channel, where required, using an appropriate grate lock system (where available).

9.0 Channel Protection
Avoid contact between compaction equipment and top of ACO channel edge rail. The installer must ensure that the finished surface level lies above the top of the edge rail (by at least 3-6mm). Covering or protecting the grating, before concreting the haunch or laying blocks, removes the time and cost associated with cleaning the channel and grating of cement material and embedded stones. (Please note that ACO channels must be installed with the grating in place to prevent deformation of the channel).

10.0 Watertight Installation to BS EN 1433:2002
Where ACO channel joints/fittings and channel/pavement interfaces are to be sealed, an appropriate sealant should be used (e.g. Sikaflex 11FC or similar). Guidance on the necessary surface preparation and/or priming should be sought from the sealant manufacturer.

For Guidance a typical method of application follows:
- The end faces of the channels are to be sound and free from dust, oil, and grease, with any loose material or dirt removed, e.g. by mechanical wire brush. No water drops should be evident.
- Using a standard cartridge gun, apply the sealant evenly and with no flaws. The detail on the ends of a channel varies from one product to another:
- Products with a basically flat face - apply the sealant in a layer approximately 5mm thick to one face of the joint.
- Products with a sealing groove within the end face - apply the sealant in a bead of approximately 10mm diameter into the sealing groove.
- Products with a sealing groove following the inside shape of the channel - apply the sealant to the end face of the channel and to the sealant groove, such that when the joint is completed, the sealant will both cover the end face and fill the groove.
- The channel unit should be placed on the prepared concrete bedding and pressed against the previously placed channel unit. A sealed joint of approximately 1-2mm width should be formed between adjacent channel units.
- Excess sealant should be wiped from the inside face of the channel to leave a smooth finish.
- The sealant is to be left to cure for 24 hours, during which time the sealant should be kept as dry as possible.

Note: Galvanised steel and iron products have good corrosion resistance to concrete and mortar products but may experience corrosion if high chloride and/or sulphate content is present. Use only good quality concrete and consider using corrosion inhibitors where necessary. The use of protective coatings, such as paint, can minimise the risk of corrosion.

Version	Date	Description	Name
F	24.6.2016	Updated title block	TS
E	18.4.2016	Revised to comments 12/04/16	TS
D	23.3.2016	Revised to comments 15/03/16	TS
C	2.3.2016	General revisions	TS

ACO Technologies plc
ACO Business Park
Hitchin Road
Shefford
Bedfordshire
SG17 5TE, UK
Tel: 01462 816666
www.aco.co.uk

Drawing Number: 21820
Revision: F
Title: ACO MULTIDRAIN M100D/DS 10.0 CHANNEL INSTALLATION DETAIL DRAWING

Created by: TS	Released by: TS	Projection: ISO-A	Units: mm	Format: A3
Created at: 9.12.2015	Released at: 24.6.2016			Scale: 1 : 10
Replacement for: E1-E01-036-3-c	Replaced by:			Sheet: 1 of 1

Information contained in this drawing is copyright property of ACO Technologies plc. Any reproduction in part or whole without written permission of ACO Technologies plc is prohibited

Product Datasheet

AquaCell Core-R

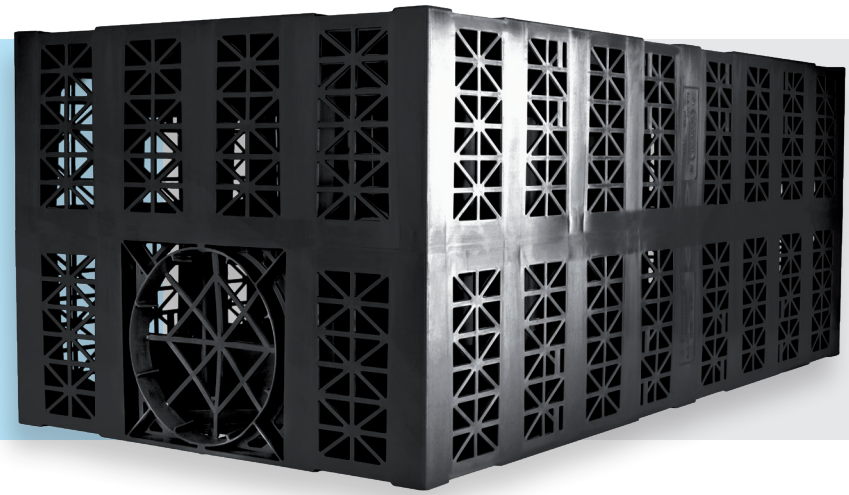

Product description

AquaCell Core-R has been designed for use in deep applications, subject to regular and heavy traffic loadings, e.g. cars and HGV's. AquaCell Core-R can also be used in both landscaped and deep soakaway applications.

Technical specification

Cat code	6LB150	**Void ratio**	95%
Colour	Black	**Material**	Recycled PP
Dimensions	1m x 0.5m x 0.4m	**Vertical loading**	66.9 tonnes/m^2 (669 kN/m^2)
Weight	11.5kg	**Lateral loading**	12.3 tonnes/m^2 (123 kN/m^2)
Storage volume	190 litres	**BBA approval**	Certificate 03/4018

Maximum installation depths

Typical soil type	**Maximum depth of installation – to base of units (m)[1]**				
	Soil weight kN/m^3	**Angle of internal friction φ (degrees)[2, 3]**	**Landscaped areas**	**Vehicle mass <9 tonnes[4, 5]**	**Vehicle mass <44 tonnes**
Over consolidated stiff clay	20	24	3.85	3.61	3.36
Silty sandy clay	19	26	4.35	4.09	3.83
Loose sand and gravel	18	30	5.34	5.06	4.78
Medium dense sand and gravel	19	34	5.94	5.68	5.41
Dense sand and gravel	20	38	6.68	6.43	6.18

Minimum cover depths

	Landscaped areas	**Car parks with vehicle mass <3 tonnes[5]**	**Car parks with vehicle mass <9 tonnes**	**Car parks with vehicle mass <12 tonnes**	**Low speed roads with vehicle mass <60 tonnes**
Minimum cover depth (m)	0.30	0.50	0.60	0.70	1.11

1. Without groundwater present below base of units – AquaCell Core-R may be used where groundwater is present, contact Wavin for technical advice.
2. Loosening of dense sand or softening of clay by water can occur during installation. The designer should allow for any such likely effects when choosing an appropriate value of φ.
3. The design is very sensitive to small changes in the assumed value of φ, therefore, it should be confirmed by a chartered geotechnical engineer. In clay soils, it may be possible to utilise cohesion in some cases.
4. Applicable for car parks or other areas trafficked only by cars or occasional refuse collection trucks or similar vehicles (typically one per week).
5. This category should be used when considering landscaped areas that may be trafficked by ride on mowers.

Assumptions made:

- Ground surface is horizontal
- Shear planes or other weaknesses are not present within the structure of the soil

Source: BBA

Wavin Limited | Edlington Lane | Edlington | Doncaster | DN12 1BY
Orders 0844 856 5152 | **Technical Advice** 0844 856 5165 | **Email** technical.design@wavin.co.uk | **Website** aquacell.wavin.co.uk

August 2020

TYPICAL VENT DETAIL

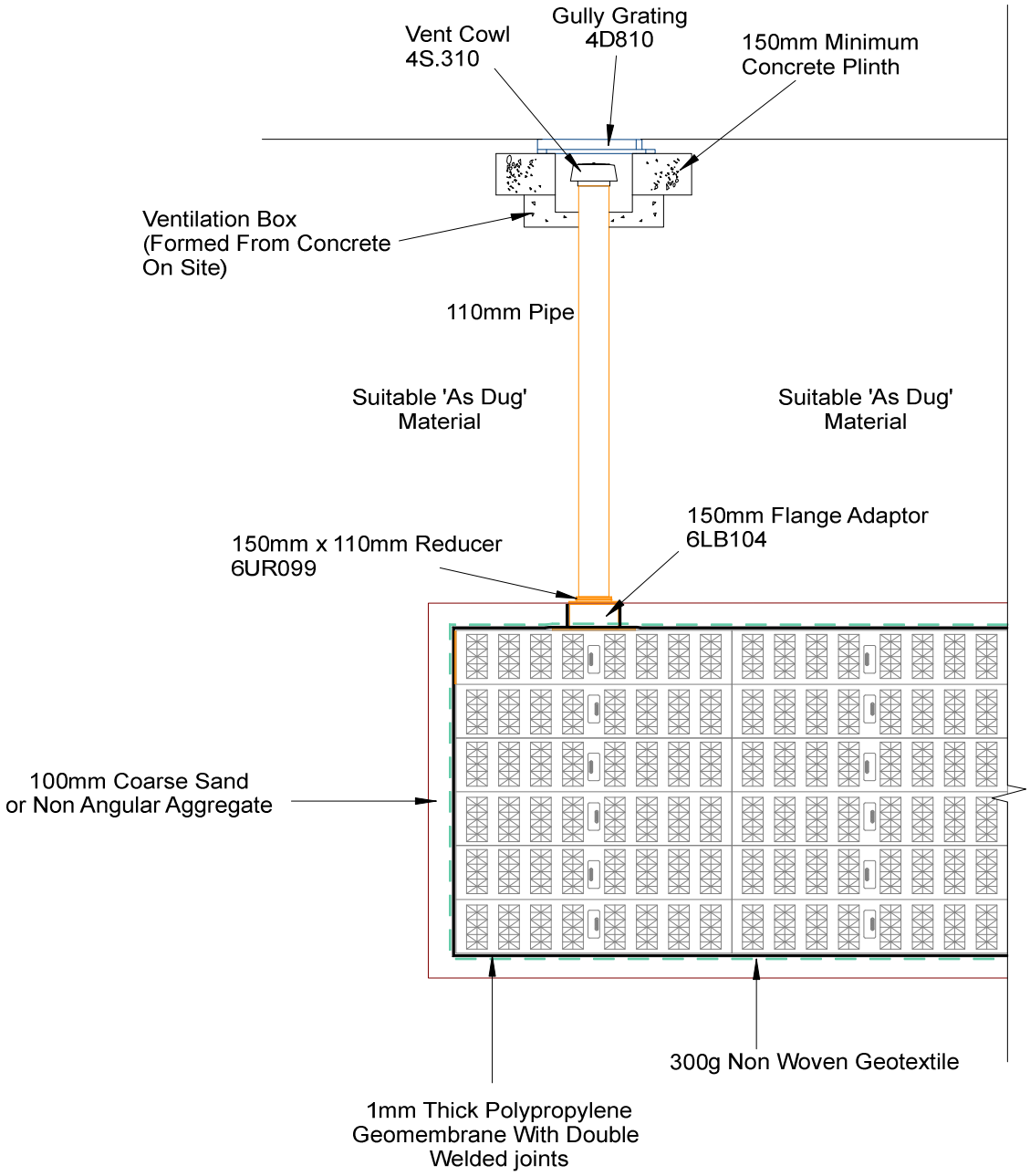

Appendix C

CCTV Report by QED Construction

Copyright © 2023 Curtins Consulting Ltd

IWJS Ltd
Peel House Peel Road, Skelmersdale
Tel. 01695 768 714
stuart.jones@iwjs.co.uk

Project

Project Name: St Michaels QED 09112024

Project Description: WinCan Import in Miraculix WRc4 Standard

Project Date: 09/11/2024

Construction

IWJS Ltd
Peel House Peel Road, Skelmersdale
Tel. 01695 768 714
stuart.jones@iwjs.co.uk

Table of Contents

Project Name	Project Number	Project Date
St Michaels QED 09112024		09/11/2024

Project Information P-1
Scoring Summary P-2
Section Profile P-3
Section Summary P-4
Project Summary P-6
Section Item 1: UU2FW > MAIN (UU2FWX) 1
Section Item 2: UU1FW > MAIN (UU1FWX) 3
Section Item 3: UU3FW > MAIN (UU3FWX) 5
Section Item 4: UU4FW > MAIN (UU4FWX) 7
..... 9

IWJS Ltd
Peel House Peel Road, Skelmersdale
Tel. 01695 768 714
stuart.jones@iwjs.co.uk

Project Information

Project Name	Project Number	Project Date
St Michaels QED 09112024		09/11/2024

Client

Company: QED Construction
Description: Civil Engineering
Contact: Alex Turner
Department: Contracts Manager
Street: Larch House Lindle Business Park
Town or City: Hutton
County: Preston
Post Code: PR4 4AQ
Phone: 01772 619930
Fax: 01772 615591
Mobile: 07725962977
Email: alex.turner@qed-construction.co.uk

Contractor

Company: IWJS Ltd
Description: Drainage Experts
Contact: Stuart Jones
Department: Regional Director
Street: Peel House Peel Road
Town or City: Skelmersdale
County: West Lancashire
Post Code: WN8 9PT
Phone: 01695 768 714
Mobile: 07815719235
Email: stuart.jones@iwjs.co.uk

IWJS Ltd
Peel House Peel Road, Skelmersdale
Tel. 01695 768 714
stuart.jones@iwjs.co.uk

Scoring Summary

Project Name	Project Number	Project Date
St Michaels QED 09112024		09/11/2024

Structural Defects

Section	PLR	Grade	Description
All inspected pipes are in an acceptable structural condition (< grade 3).			

Service / Operational Condition

Section	PLR	Grade	Description
All inspected pipes are in an acceptable service condition (< grade 3).			

Abandoned Surveys

Section	PLR	Description
All inspections complete, none are abandoned.		

Information

These scoring summaries are based on the SRM grading from the WRc.

IWJS Ltd
Peel House Peel Road, Skelmersdale
Tel. 01695 768 714
stuart.jones@iwjs.co.uk

Section Profile

Project Name	Project Number	Project Date
St Michaels QED 09112024		09/11/2024

Circular, 100 mm

Item No.	Upstream Node	Downstream Node	Date	Road	Pipe Material	Total Length	Inspected Length
3	UU3FW	MAIN	09/11/2024	St Michaels	Polyvinyl chloride	12.44 m	12.44 m
4	UU4FW	MAIN	09/11/2024	St Michaels	Polyvinyl chloride	23.97 m	23.97 m

Total: 2 Inspections x Circular 100 mm = 36.41 m Total Length and 36.41 m Inspected Length

Circular, 150 mm

Item No.	Upstream Node	Downstream Node	Date	Road	Pipe Material	Total Length	Inspected Length
1	UU2FW	MAIN	09/11/2024	St Michaels	Polyvinyl chloride	4.93 m	4.93 m
2	UU1FW	MAIN	09/11/2024	St Michaels	Polyvinyl chloride	4.92 m	4.92 m

Total: 2 Inspections x Circular 150 mm = 9.85 m Total Length and 9.85 m Inspected Length

Total: 4 Inspections = 46.26 m Total Length and 46.26 m Inspected Length

IWJS Ltd
Peel House Peel Road, Skelmersdale
Tel. 01695 768 714
stuart.jones@iwjs.co.uk

Section Summary

Project Name	Project Number	Project Date
St Michaels QED 09112024		09/11/2024

Number of sections	4
Total length of sections	46.26 m
Total length of inspected sections	46.26 m
Total length of not inspected sections	0.00 m
Number of abandoned inspections	0
Number of section inspection photos	8
Number of section inspection videos	4
Number of section inspection scans	0
Number of section inclination measurements	0

PLR:	UU2FWX	**Upstream Node:**	UU2FW
Inspection Direction:	Downstream	**Downstream Node:**	MAIN
Inspected Length:	4.93 m	**Dia/Height:**	150 mm
Total Length:	4.93 m	**Pipe Material:**	Polyvinyl chloride

No.	m+	Code	Observation
1	0.00	OC	Start node type, other special chamber, reference number: UU2FW
2	0.00	WL	Water level, 5% % of the vertical dimension
3	0.00	LD	Line deviates down
4	4.47	LD	Line deviates down
5	4.93	OFF	Finish node type, outfall, reference number: MAIN

PLR:	UU1FWX	**Upstream Node:**	UU1FW
Inspection Direction:	Downstream	**Downstream Node:**	MAIN
Inspected Length:	4.92 m	**Dia/Height:**	150 mm
Total Length:	4.92 m	**Pipe Material:**	Polyvinyl chloride

No.	m+	Code	Observation
1	0.00	OC	Start node type, other special chamber, reference number: UU1FW
2	0.00	WL	Water level, 5% % of the vertical dimension
3	0.00	LD	Line deviates down
4	4.92	OFF	Finish node type, outfall, reference number: MAIN

PLR:	UU3FWX	**Upstream Node:**	UU3FW
Inspection Direction:	Downstream	**Downstream Node:**	MAIN
Inspected Length:	12.44 m	**Dia/Height:**	100 mm
Total Length:	12.44 m	**Pipe Material:**	Polyvinyl chloride

No.	m+	Code	Observation
1	0.00	OC	Start node type, other special chamber, reference number: UU3FW
2	0.00	WL	Water level, 5% % of the vertical dimension

IWJS Ltd
Peel House Peel Road, Skelmersdale
Tel. 01695 768 714
stuart.jones@iwjs.co.uk

Section Summary

Project Name	Project Number	Project Date
St Michaels QED 09112024		09/11/2024

No.	m+	Code	Observation
3	0.22	JN	Junction, at 03 o'clock, diameter: 100 mm
4	1.68	WL	Water level, 10% of the vertical dimension
5	3.79	WL	Water level, 5% of the vertical dimension
6	3.85	LD	Line deviates down
7	4.51	REM	General remark
8	5.05	WL	Water level, 10% of the vertical dimension
9	5.73	REM	General remark
10	12.44	OFF	Finish node type, outfall, reference number: MAIN

PLR:	UU4FWX	**Upstream Node:**	UU4FW
Inspection Direction:	Downstream	**Downstream Node:**	MAIN
Inspected Length:	23.97 m	**Dia/Height:**	100 mm
Total Length:	23.97 m	**Pipe Material:**	Polyvinyl chloride

No.	m+	Code	Observation
1	0.00	OC	Start node type, other special chamber, reference number: UU4FW
2	0.00	WL	Water level, 5% % of the vertical dimension
3	0.17	JN	Junction, at 09 o'clock, diameter: 100 mm
4	0.37	JN	Junction, at 03 o'clock, diameter: 100 mm
5	14.20	JN	Junction, at 12 o'clock, diameter: 100 mm
6	15.64	LD	Line deviates down
7	16.38	REM	General remark
8	17.69	REM	General remark
9	19.78	LD	Line deviates down
10	22.45	REM	General remark
11	23.97	OFF	Finish node type, outfall, reference number: MAIN

IWJS Ltd
Peel House Peel Road, Skelmersdale
Tel. 01695 768 714
stuart.jones@iwjs.co.uk

Project Summary

Project Name	Project Number	Project Date
St Michaels QED 09112024		09/11/2024

Pipe Summary

No.	Type	PLR	Upstream Node	Downstream Node	Road	Town	Use	Mat.	Profile	Length
1	SEC	UU2FWX	UU2FW	MAIN	St Michaels	Manchester	F	PVC	Circular 150mm	4.93 m
2	SEC	UU1FWX	UU1FW	MAIN	St Michaels	Manchester	F	PVC	Circular 150mm	4.92 m
3	SEC	UU3FWX	UU3FW	MAIN	St Michaels	Manchester	F	PVC	Circular 100mm	12.44 m
4	SEC	UU4FWX	UU4FW	MAIN	St Michaels	Manchester	F	PVC	Circular 100mm	23.97 m
									Total:	**46.26 m**

IWJS Ltd
Peel House Peel Road, Skelmersdale
Tel. 01695 768 714
stuart.jones@iwjs.co.uk

Section Inspection - 09/11/2024 - UU2FWX

Item No.	Insp. No.	Date	Time	Client`s Job Ref	Weather	Pre Cleaned	PLR
1	1	09/11/24	9:51	St Michaels QED	No Rain Or Snow	Yes	UU2FWX

Operator	Vehicle	Camera	Preset Length	Legal Status	Alternative ID
E Lucas	PO24 XOP	Coiled Pushrod	Not Specified	Private Sewer	1

Town or Village:	Manchester	**Inspection Direction:**	Downstream	**Upstream Node:**	UU2FW
Road:	St Michaels	**Inspected Length:**	4.93 m	**Upstream Pipe Depth:**	
Location:	Property with buildings	**Total Length:**	4.93 m	**Downstream Node:**	MAIN
Surface Type:		**Joint Length:**		**Downstream Pipe Depth:**	

Use:	Foul	**Pipe Shape:**	Circular
Type of Pipe:	Gravity drain/sewer	**Dia/Height:**	150 mm
Flow Control:	No flow control	**Pipe Material:**	Polyvinyl chloride
Year Constructed:	Not Specified	**Lining Type:**	No Lining
Inspection Purpose:	Post completion inspection of new sewers	**Lining Material:**	No Lining

Comments:
Recommendations:

Scale: 1:50

Depth: m
UU2FW

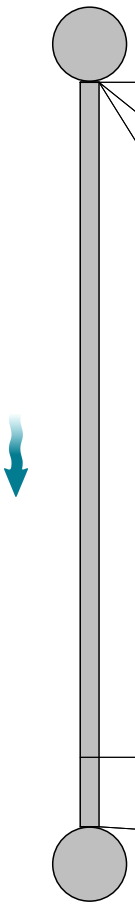

Position [m]	Code	Observation	MPEG	Photo	Grade
0.00	OC	Start node type, other special chamber, reference number: UU2FW: Access	00:00:02		
0.00	WL	Water level, 5% % of the vertical dimension	00:00:03		
0.00	LD	Line deviates down	00:00:03		
4.47	LD	Line deviates down	00:00:32		
4.93	OFF	Finish node type, outfall, reference number: MAIN	00:00:38	UU2FW-MAIN_4-93m_095535	

MAIN
Depth: m

Construction Features					Miscellaneous Features				
Structural Defects					Service & Operational Observations				
STR No. Def	**STR Peak**	**STR Mean**	**STR Total**	**STR Grade**	**SER No. Def**	**SER Peak**	**SER Mean**	**SER Total**	**SER Grade**
0	0.0	0.0	0.0	1.0	0	0.0	0.0	0.0	1.0

IWJS Ltd
Peel House Peel Road, Skelmersdale
Tel. 01695 768 714
stuart.jones@iwjs.co.uk

Section Pictures - 09/11/2024 - UU2FWX

Item No.	Inspection Direction	PLR	Client`s Job Ref	Contractor`s Job Ref
1	Downstream	UU2FWX	St Michaels QED	

UU2FW-MAIN_4-93m_095535.jpg, 00:00:38, 4.93 m
Finish node type, outfall, reference number: MAIN

IWJS Ltd
Peel House Peel Road, Skelmersdale
Tel. 01695 768 714
stuart.jones@iwjs.co.uk

Section Inspection - 09/11/2024 - UU1FWX

Item No.	Insp. No.	Date	Time	Client`s Job Ref	Weather	Pre Cleaned	PLR
2	2	09/11/24	9:57	St Michaels QED	No Rain Or Snow	Yes	UU1FWX

Operator	Vehicle	Camera	Preset Length	Legal Status	Alternative ID
E Lucas	PO24 XOP	Coiled Pushrod	Not Specified	Private Sewer	1

Town or Village:	Manchester	**Inspection Direction:**	Downstream	**Upstream Node:**	UU1FW
Road:	St Michaels	**Inspected Length:**	4.92 m	**Upstream Pipe Depth:**	
Location:	Property with buildings	**Total Length:**	4.92 m	**Downstream Node:**	MAIN
Surface Type:		**Joint Length:**		**Downstream Pipe Depth:**	

Use:	Foul	**Pipe Shape:**	Circular
Type of Pipe:	Gravity drain/sewer	**Dia/Height:**	150 mm
Flow Control:	No flow control	**Pipe Material:**	Polyvinyl chloride
Year Constructed:	Not Specified	**Lining Type:**	No Lining
Inspection Purpose:	Post completion inspection of new sewers	**Lining Material:**	No Lining

Comments:
Recommendations:

Scale: 1:50

Depth: m
UU1FW

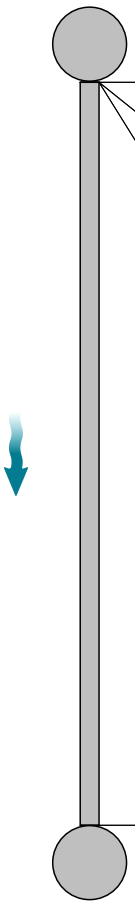

Position [m]	Code	Observation	MPEG	Photo	Grade
0.00	OC	Start node type, other special chamber, reference number: UU1FW: Access point	00:00:02		
0.00	WL	Water level, 5% % of the vertical dimension	00:00:03		
0.00	LD	Line deviates down	00:00:03		
4.92	OFF	Finish node type, outfall, reference number: MAIN	00:00:41	UU1FW-MAIN_4-92m_095948	

MAIN
Depth: m

Construction Features					Miscellaneous Features				
Structural Defects					Service & Operational Observations				
STR No. Def	**STR Peak**	**STR Mean**	**STR Total**	**STR Grade**	**SER No. Def**	**SER Peak**	**SER Mean**	**SER Total**	**SER Grade**
0	0.0	0.0	0.0	1.0	0	0.0	0.0	0.0	1.0

IWJS Ltd
Peel House Peel Road, Skelmersdale
Tel. 01695 768 714
stuart.jones@iwjs.co.uk

Section Pictures - 09/11/2024 - UU1FWX

Item No.	Inspection Direction	PLR	Client`s Job Ref	Contractor`s Job Ref
2	Downstream	UU1FWX	St Michaels QED	

UU1FW-MAIN_4-92m_095948.jpg, 00:00:41, 4.92 m
Finish node type, outfall, reference number: MAIN

IWJS Ltd
Peel House Peel Road, Skelmersdale
Tel. 01695 768 714
stuart.jones@iwjs.co.uk

Section Inspection - 09/11/2024 - UU3FWX

Item No.	Insp. No.	Date	Time	Client`s Job Ref	Weather	Pre Cleaned	PLR
3	3	09/11/24	10:02	St Michaels QED	No Rain Or Snow	Yes	UU3FWX

Operator	Vehicle	Camera	Preset Length	Legal Status	Alternative ID
E Lucas	PO24 XOP	Coiled Pushrod	Not Specified	Private Sewer	1

Town or Village:	Manchester	**Inspection Direction:**	Downstream	**Upstream Node:**	UU3FW
Road:	St Michaels	**Inspected Length:**	12.44 m	**Upstream Pipe Depth:**	
Location:	Property with buildings	**Total Length:**	12.44 m	**Downstream Node:**	MAIN
Surface Type:		**Joint Length:**		**Downstream Pipe Depth:**	

Use:	Foul	**Pipe Shape:**	Circular
Type of Pipe:	Gravity drain/sewer	**Dia/Height:**	100 mm
Flow Control:	No flow control	**Pipe Material:**	Polyvinyl chloride
Year Constructed:	Not Specified	**Lining Type:**	No Lining
Inspection Purpose:	Post completion inspection of new sewers	**Lining Material:**	No Lining

Comments:
Recommendations:

Scale: 1:108

Depth: m
UU3FW

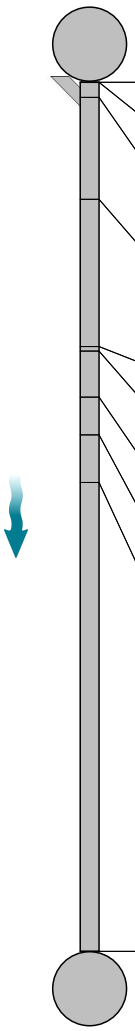

Position [m]	Code	Observation	MPEG	Photo	Grade
0.00	OC	Start node type, other special chamber, reference number: UU3FW: Access point	00:00:03		
0.00	WL	Water level, 5% % of the vertical dimension	00:00:04		
0.22	JN	Junction, at 03 o'clock, diameter: 100 mm	00:00:11	UU3FW-MAIN_0-22m_100643	
1.68	WL	Water level, 10% of the vertical dimension	00:00:16		
3.79	WL	Water level, 5% of the vertical dimension	00:00:23		
3.85	LD	Line deviates down	00:00:24		
4.51	REM	General remark: Line levels	00:00:31		
5.05	WL	Water level, 10% of the vertical dimension	00:00:32		
5.73	REM	General remark: Start of QED installation.	00:00:35		
12.44	OFF	Finish node type, outfall, reference number: MAIN	00:01:00	UU3FW-MAIN_12-44m_100746	

MAIN
Depth: m

Construction Features					Miscellaneous Features				
Structural Defects					Service & Operational Observations				
STR No. Def	**STR Peak**	**STR Mean**	**STR Total**	**STR Grade**	**SER No. Def**	**SER Peak**	**SER Mean**	**SER Total**	**SER Grade**
0	0.0	0.0	0.0	1.0	0	0.0	0.0	0.0	1.0

IWJS Ltd
Peel House Peel Road, Skelmersdale
Tel. 01695 768 714
stuart.jones@iwjs.co.uk

Section Pictures - 09/11/2024 - UU3FWX

Item No.	Inspection Direction	PLR	Client`s Job Ref	Contractor`s Job Ref
3	Downstream	UU3FWX	St Michaels QED	

UU3FW-MAIN_0-22m_100643.jpg, 00:00:11, 0.22 m
Junction, at 03 o'clock, diameter: 100 mm

UU3FW-MAIN_12-44m_100746.jpg, 00:01:00, 12.44 m
Finish node type, outfall, reference number: MAIN

IWJS Ltd
Peel House Peel Road, Skelmersdale
Tel. 01695 768 714
stuart.jones@iwjs.co.uk

Section Inspection - 09/11/2024 - UU4FWX

Item No.	Insp. No.	Date	Time	Client`s Job Ref	Weather	Pre Cleaned	PLR
4	4	09/11/24	10:09	St Michaels QED	No Rain Or Snow	Yes	UU4FWX

Operator	Vehicle	Camera	Preset Length	Legal Status	Alternative ID
E Lucas	PO24 XOP	Coiled Pushrod	Not Specified	Private Sewer	1

Town or Village:	Manchester	**Inspection Direction:**	Downstream	**Upstream Node:**	UU4FW
Road:	St Michaels	**Inspected Length:**	23.97 m	**Upstream Pipe Depth:**	
Location:	Property with buildings	**Total Length:**	23.97 m	**Downstream Node:**	MAIN
Surface Type:		**Joint Length:**		**Downstream Pipe Depth:**	

Use:	Foul	**Pipe Shape:**	Circular
Type of Pipe:	Gravity drain/sewer	**Dia/Height:**	100 mm
Flow Control:	No flow control	**Pipe Material:**	Polyvinyl chloride
Year Constructed:	Not Specified	**Lining Type:**	No Lining
Inspection Purpose:	Post completion inspection of new sewers	**Lining Material:**	No Lining

Comments:
Recommendations:

Scale: 1:208

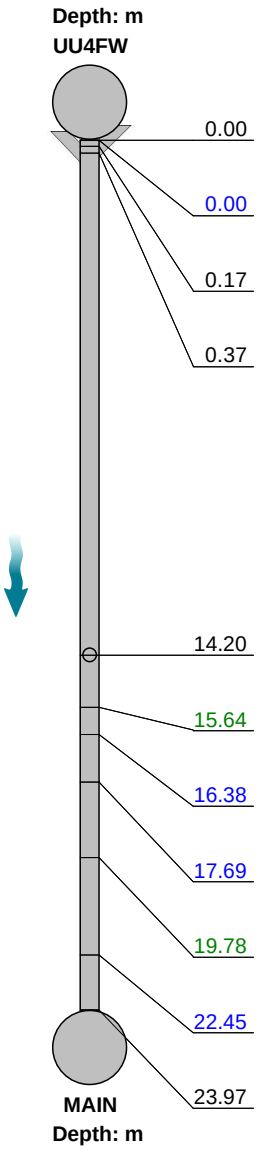

Position [m]	Code	Observation	MPEG	Photo	Grade
0.00	OC	Start node type, other special chamber, reference number: UU4FW: Access point	00:00:03		
0.00	WL	Water level, 5% % of the vertical dimension	00:00:04		
0.17	JN	Junction, at 09 o'clock, diameter: 100 mm	00:00:07	UU4FW-MAIN_0-17m_101535	
0.37	JN	Junction, at 03 o'clock, diameter: 100 mm	00:00:17	UU4FW-MAIN_0-37m_101551	
14.20	JN	Junction, at 12 o'clock, diameter: 100 mm	00:01:02	UU4FW-MAIN_14-20m_101645	
15.64	LD	Line deviates down	00:01:09		
16.38	REM	General remark: Line levels	00:01:17		
17.69	REM	General remark: Start of QED installation.	00:01:31		
19.78	LD	Line deviates down	00:01:39		
22.45	REM	General remark: Line levels	00:01:43		
23.97	OFF	Finish node type, outfall, reference number: MAIN	00:02:08	UU4FW-MAIN_23-97m_101759	

Construction Features					Miscellaneous Features				
Structural Defects					Service & Operational Observations				
STR No. Def	**STR Peak**	**STR Mean**	**STR Total**	**STR Grade**	**SER No. Def**	**SER Peak**	**SER Mean**	**SER Total**	**SER Grade**
0	0.0	0.0	0.0	1.0	0	0.0	0.0	0.0	1.0

IWJS Ltd
Peel House Peel Road, Skelmersdale
Tel. 01695 768 714
stuart.jones@iwjs.co.uk

Section Pictures - 09/11/2024 - UU4FWX

Item No.	Inspection Direction	PLR	Client`s Job Ref	Contractor`s Job Ref
4	Downstream	UU4FWX	St Michaels QED	

UU4FW-MAIN_0-17m_101535.jpg, 00:00:07, 0.17 m
Junction, at 09 o'clock, diameter: 100 mm

UU4FW-MAIN_0-37m_101551.jpg, 00:00:17, 0.37 m
Junction, at 03 o'clock, diameter: 100 mm

UU4FW-MAIN_14-20m_101645.jpg, 00:01:02, 14.20 m
Junction, at 12 o'clock, diameter: 100 mm

UU4FW-MAIN_23-97m_101759.jpg, 00:02:08, 23.97 m
Finish node type, outfall, reference number: MAIN

Appendix D

Bowmer & Kirkland Correspondence

Copyright © 2023 Curtins Consulting Ltd

Jacob Collin

From: Richard Bartlett
Sent: 29 November 2024 10:13
To: Jacob Collin; Charlie Smith
Subject: FW: STM - Drainage Verification Report
Attachments: image003.gif; image003.gif; image003.gif; image003.gif; image003.gif; image009.png; image010.jpg; 078847-CUR-00-XX-T-9200 - Verification and Drainage Strategy FULL REPORT.pdf

Follow Up Flag: Follow up
Flag Status: Flagged

Please see last point in email below

This needs to be included in the appendix in the verification report.

Thanks

Rich

Richard Bartlett
Principal Civil Engineer

Tel: 0161 236 2394
richard.bartlett@curtins.com
curtins.com

From: Jordan Hedgeland <J.Hedgeland@bandk.co.uk>
Sent: 29 November 2024 09:03
To: Richard Bartlett <Richard.Bartlett@curtins.com>
Cc: Matthew Wright <Matthew.Wright@curtins.com>; StMichaels@4projectsmail.com; Barry Evans <engineer.stmichaels@outlook.com>
Subject: Re: STM - Drainage Verification Report

Hi Richard

Can you check what I've issued you as I'm confident that the photos of the chambers and attenuation have been provided.

Barry, do we have photos of the pumps themselves?

In addition, I can confirm that the drainage has been installed to the Curtin's design.

Jordan

Jordan Hedgeland
Senior Design Manager

Tel: 0161 493 1880 | Mob: 07818 534278
North West Regional Office, 1st Floor, Altitude, Atlas Business Park, Manchester, M22 5PR, United Kingdom

Email | Website

Appendix E

As-Built Drawings

Copyright © 2023 Curtins Consulting Ltd

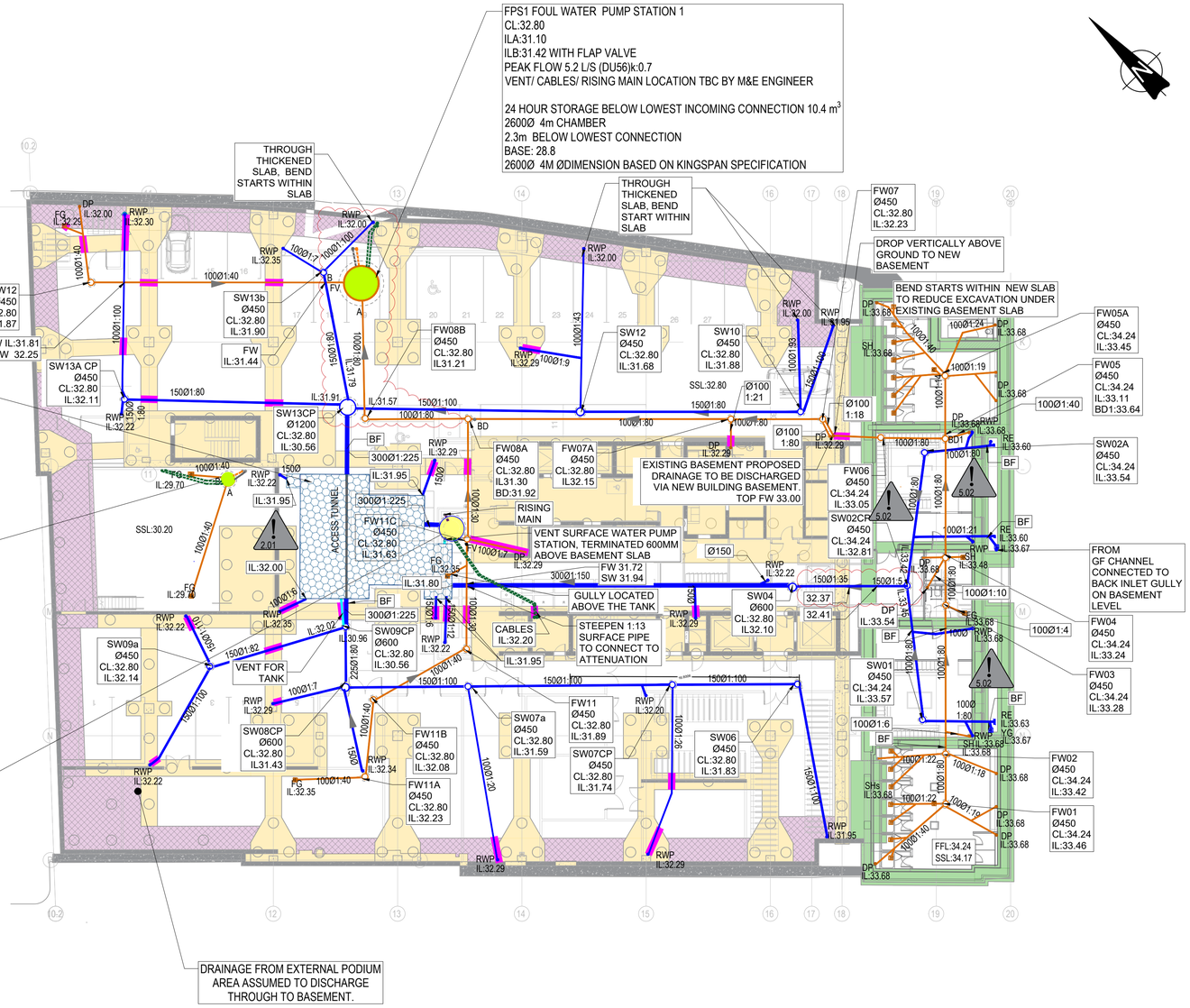

GENERAL NOTES:

1. THIS DRAWING IS TO BE READ IN CONJUNCTION WITH ALL RELEVANT ARCHITECTS AND ENGINEERS DRAWINGS AND SPECIFICATIONS.
2. ALL ADOPTABLE DRAINAGE WORKS INCLUDING WORKS TO EXISTING PUBLIC SEWERS TO BE UNDERTAKEN IN ACCORDANCE WITH "SEWERS FOR ADOPTION 7th EDITION" AND "CIVIL ENGINEERING SPECIFICATION FOR THE WATER INDUSTRY 7th EDITION" AND CONSTRUCTED TO THE RELEVANT STATUTORY UNDERTAKERS DETAILS.
3. ALL PRIVATE DRAINAGE WORKS TO BE IN ACCORDANCE WITH CURTINS DRAINAGE SPECIFICATION, "CIVIL ENGINEERING SPECIFICATION FOR THE WATER INDUSTRY 7th EDITION", BS EN 752 2017 'DRAIN AND SEWER SYSTEMS OUTSIDE BUILDINGS' AND THE BUILDING REGULATIONS APPROVED 'DOCUMENT H'.
4. DO NOT SCALE THIS DRAWING. ANY AMBIGUITIES, OMISSIONS AND ERRORS ON DRAWINGS SHALL BE BROUGHT TO THE ENGINEERS ATTENTION IMMEDIATELY. ALL DIMENSIONS MUST BE CHECKED / VERIFIED ON SITE.
5. OUTFALL CONNECTION(S) SUBJECT TO AGREEMENT WITH THE APPROVING AUTHORITY.
6. ALL DIMENSIONS ARE IN METRES AND LEVELS IN METRES ABOVE ORDNANCE DATUM UNLESS OTHERWISE NOTED.
7. COVER LEVELS, GULLY POSITIONS, AND BUILDINGS LOCATION ARE APPROXIMATE AND SHALL BE CONFIRMED BY ARCHITECT/ LANDSCAPE ARCHITECT. CONTRACTOR TO ALLOW FOR ADJUSTMENT TO SUIT AGREED POSITIONS AND FINISHED LEVELS, AND CONFIRM ALL COVER LEVELS ON SITE.
8. ALL INTERNAL DRAINAGE CONNECTIONS ARE PROVIDED TO THE PENETRATION POSITIONS SHOWN ON ARCHITECT AND M&E DRAWINGS. REFER TO DIMENSIONED LOCATIONS AND DIAMETERS ON ARCHITECT'S GROUND FLOOR SETTING-OUT PLANS.
9. ALL UNDERGROUND FOUL DRAINAGE SHOULD BE SUITABLY VENTED AT OR NEAR TO THE HEAD OF RUNS.
10. ALL ACCESS FITTINGS, STACKS, RWP'S AND GULLIES TO BE RODDABLE. ALL TO HAVE LOW LEVEL RODDING ACCESS PLATES UNLESS AN ALTERNATIVE MEANS OF ACCESS IS AGREED. ACCESS POINT TO BE ABOVE ANY GROUND FLOOR CONNECTED APPLIANCE SPILL LEVEL.
11. LARGE ACCESS FITTING REQUIRED ABOVE GROUND WHERE GREATER THAN 12M UP TO 22M TO A JUNCTION. SMALL ACCESS FITTING REQUIRED UP TO 12M TO A JUNCTION.
12. ALL GULLY AND CHANNEL DRAIN OUTLETS AND TERMINATION POINTS TO BE TRAPPED AND RODDABLE. INTERNAL GULLIES AND CHANNEL DRAINS TO BE SPECIFIED BY OTHERS.
13. WHERE NO WC'S ARE CONNECTED UPSTREAM, UNDERSLAB FW DRAINAGE TO BE LAID AT 1:40 MIN. AFTER THE CONNECTION OF AT LEAST 1NO WC, A MIN. FALL OF 1:80 APPLIES.
14. ALL CONNECTIONS FROM POP-UPS TO BE LAID AT A CONSTANT GRADIENT TO JUNCTION/ INSPECTION CHAMBER/ MANHOLE UNLESS NOTED OTHERWISE. ANY ISSUES RELATING TO CLASHES WITH FOUNDATIONS ARE TO BE FORWARDED TO THE ENGINEER, ALLOWING SUFFICIENT TIME FOR AN ALTERNATIVE SOLUTION TO BE PROPOSED.
15. INVERT LEVELS AT MANHOLES/ INSPECTION CHAMBERS TO BE USED TO SET OUT PIPEWORK. PIPE GRADIENTS ARE SHOWN INDICATIVELY ONLY.
16. ALL PIPE DIAMETERS GIVEN ARE NOMINAL INTERNAL PIPE DIAMETERS.
17. ALL SEWERS, UNLESS AGREED OTHERWISE STATED, SHALL BE:
    - 100mm to 300mm DIA TO BE VITRIFIED CLAY.
18. AS AN ALTERNATIVE THE CONTRACTOR MAY USE AN APPROVED UNPLASTICISED POLYVINYL CHLORIDE (PVCU) WITH APPROVAL FROM THE ENGINEER.
19. SEWER PIPES TO BE LAID IN MAXIMUM 3 METRE LENGTHS UNLESS THERE IS A SPECIFIC OPERATIONAL NEED TO LAY LONGER LENGTHS.
20. THE FIRST PIPE OUT OF MANHOLES TO BE AS SHORT AS PRACTICABLE SO AS TO PROVIDE A FLEXIBLE JOINT AS CLOSE AS POSSIBLE TO THE OUTSIDE FACE OF THE CONCRETE SURROUND AND CONNECTED TO A LENGTH OF ROCKER PIPE.
21. ALL NEW CONNECTIONS INTO EXISTING MANHOLES (OR INTO EXISTING SEWERS) TO BE 'SOFFITS LEVEL' UNLESS OTHERWISE NOTED.
22. ALL ADOPTABLE DRAINAGE PIPES WILL REQUIRE A MINIMUM OF 1200mm COVER, IN ACCORDANCE WITH SEWERAGE UNDERTAKERS REQUIREMENTS. WHERE THIS IS NOT ACHIEVED, IT WILL BE NECESSARY TO AGREE THE BED AND SURROUND DETAIL.
23. ALL PRIVATE DRAINAGE PIPES WITH A COVER OF LESS THAN 600mm IN NON-TRAFFICKED AREAS AND LESS THAN 1200mm IN TRAFFICKED AREAS TO BE BEDDED AND SURROUNDED IN CONCRETE (CLASS Z). COMPRESSIBLE MATERIAL SHALL BE PROVIDED AT EVERY PIPE JOINT. WHERE COVER EXCEEDS THIS DEPTH, PIPES ARE TYPICALLY BEDDED AND SURROUNDED IN CLASS S. REFER TO PIPE EMBEDMENT DETAILS DRAWING FOR SPECIFIC TYPES.
24. WHERE DRAINAGE PIPES ARE LESS THAN 300mm BELOW THE UNDERSIDE OF THE GROUND FLOOR SLAB, CONCRETE ENCASEMENT IS REQUIRED (CLASS Z). COMPRESSIBLE JOINTS ARE TO BE PROVIDED AT EVERY PIPE JOINT WITHIN THE CONCRETE.
25. WHERE PIPES ARE MORE THAN 300mm BELOW THE UNDERSIDE OF THE SLAB, CLASS S BEDDING IS ACCEPTABLE.
26. SULPHATE RESISTANT CEMENT (C20-DC2) AND PRECAST CONCRETE PRODUCTS MUST BE USED OR A LABORATORY REPORT PROVIDED TO PROVE THAT SUCH PRECAUTIONS ARE NOT REQUIRED.
27. WHERE FOUL SEWERS RUN ABOVE SURFACE SEWERS, CONCRETE PROTECTION MAY BE REQUIRED AT CROSSOVERS TO PREVENT ANY POTENTIAL CONTAMINATION.
28. ALL CONNECTIONS PASSING THROUGH BASES OR EDGE BEAMS TO BE IN SEALED SLEEVES. ALTERNATIVELY CONNECTIONS MAY BE CAST-IN WITH FLEXIBLE JOINTS NOT GREATER THAN 150MM FROM FACE OF CONCRETE.
29. THE CHAMBER SIZE OF MANHOLES WITH MORE THAN ONE CONNECTION MAY NEED TO BE INCREASED TO ACCOMMODATE THE CONNECTIONS AND BENDS.
30. ALL MANHOLE COVERS IN BLOCK/SLAB AND EXTERNAL PAVING AREAS TO HAVE RECESSED COVERS OF THE APPROPRIATE GRADE TO ACCEPT ARCHITECT'S PAVING PROPOSAL.
31. ALL INTERNAL COVERS TO HAVE MECHANICALLY JOINTED CORNERS AND DOUBLE SEALED WITH RECESSED TRAY TO ALLOW FOR FINISHES.
32. UNLESS NOTED OTHERWISE IN THE MANHOLE SCHEDULE, ALL MANHOLE, GULLY AND CHANNEL COVERS (IRONWORK) SHOULD BE THE FOLLOWING SPECIFICATION:
    - B125 LOAD CLASS IN PEDESTRIAN AREAS
    - D400 LOAD CLASS IN VEHICULAR AREAS.
33. ALL PROPRIETARY PRODUCTS TO BE INSTALLED IN STRICT ACCORDANCE WITH THE MANUFACTURERS REQUIREMENTS, INSTRUCTIONS AND RECOMMENDATIONS.
34. THE DESIGN IS BASED ON A GRAVITY RAINWATER SYSTEM.

CONSTRUCTION RECORD - FINAL CONSTRUCTION

THE INFORMATION IS BASED ON CONFIRMATION FROM THE CONTRACTOR OF THE INSTALLED WORKS. THERE MAY BE VARIATIONS ON SITE WHICH ARE NOT REFLECTED ON THIS DRAWING AND HAS NOT BEEN VERIFIED BY CURTINS.

Rev:	Description:	Date:	By:	Chkd:
CO7	FINAL CONSTRUCTION ISSUE	02.12.24	JC	RB
C06	CHANGES CLOUDED	25.01.23	MW	MW
C05	CHANGE AS REQUESTED SW02 CONNECTED TO SW04, CHANGES CLOUDED	15.12.22	MW	MW
C04	UPDATED TO SETTING OUT	27.10.22	MW	MW
C03	UPDATED TO SETTING OUT	24.10.22	MW	MW
C02	STAGE 5 UPDATES	20.10.22	MW	MW
C01	STAGE 5 ISSUE	02.09.22	TH	MW
P08	STAGE 4 ISSUE	30.06.22	MW	MW
P07	POPUPS UPDATED	17.05.22	MW	MW
P06	STAGE 3 UPDATED	04.05.22	MW	MW
P05	HAZARD TABLE ADDED	07.04.22	MW	MW
P04	STAGE 3 ISSUE	04.04.22	MW	MW
P03	UPDATE TO B & K COMMENTS	06/12/21	CS	CG
P02	STAGE 2 ISSUE	17/09/21	CD	AN
P01	ISSUED FOR COMMENTS	17/08/21	CG	CG

FOUL PUMPING STATION 1 & STORAGE

IT WILL BE NECESSARY TO PROVIDE 24 HOUR STORAGE PROVISION FOR ALL DRAINAGE REQUIRING DISCHARGE VIA A PUMED OUTFALL AT BASEMENT LEVEL.

IT IS THEREFORE PROPOSED THAT ALL DRAINAGE AT GROUND FLOOR LEVEL AND ABOVE, WILL BE SUSPENDED BELOW GROUND FLOOR LEVEL AND DISCHARGED DIRECTLY TO THE PUBLIC SEWER BY GRAVITY TO LIMIT PUMPED STORAGE VOLUMES.

PUMPED VOLUMES WILL BE BASED ON
- OCCUPANCY NUMBERS USING THE BASEMENT FACILITIES - OCCUPANCY NUMBERS 184 CYCLIST
- OCCUPANCY OF COURTYARD BAR 99 PEOPLE

IT IS POTENTIAL THAT WILL BE SOME RUNNERS ASSUMED 4 OCCASIONAL RUNNERS (2%FROM 184), HOWEVER ADDITIONAL 0.2m3 WILL BE STORED WITHIN PIPE WORK IN CASE OF POWER FAILURE,
2 SINKS AND DISHWASHER FROM GROUND FLOOR STUFF KITCHEN INCLUDED IN PEAK FLOW, THE VOLUME WILL BE STORED IN PAPERWORK APPOX 0.021 m3 (0.009m3-DISHWASHER 1 PER DAY, 5MINX15L/MIN X5 PER DAY=0.006 X2 SINKS=0.012 m3

PUMP STATION SIZE REQUIRES TO BE APPROVED BY BUILDING CONTROL

FOUL WATER PUMP STATION 1 24 H STORAGE VOLUME CALCULATION

	Max number of cyclist/ occupancy	User based on Bristish Flow and Loads part 4	Total usage	
WC 10l	184	10	1840	
showers	184	40	7360	
courtyard bar	99	12	1188	
		Total	10388	l/d
		Total	10.39	m3

THE CONTRACTOR/ CLIENT SHOULD BE SATISFY THEMSELVES THAT THE ASSUMPTIONS ARE SUFFICIENTLY ROBUST

FOUL PUMPING STATION 2 & STORAGE

FOUL WATER PUMP STATION TAKE FLOWS ONLY FROM GULLIES.
IT HAS BEEN ASSUMED THAT SPRINKLER TANK HAS SEPARATE PUMP FOR SPRINKLER WASHDOWN PROVIDED BY SPLINKER TANK SUPPLIER.
IF WASHDOWN FROM SPRINKER TANK HAS TO BE CONNECTED TO FOUL WATER PUMP 2, PUMP CHAMBER SHOULD BE UPSIZED

THE DESIGN RESPONSIBILITIES FOR THE FOUL AND SURFACE WATER PUMP SYSTEMS ARE AS STATED BELOW:-
- PUMPING STATION DESIGN AND SPECIFICATION - **MANUFACTURER/SUPPLIER.**
- PUMPING STATION CIVIL WORKS - **MAIN CONTRACTOR.**
- SITE LAYOUT AND PUMPING STATION LOCATION - **ARCHITECT/CLIENT**
- PUMPING STATION INSTALLATION - **MANUFACTURER/SUPPLIER.**
- RISING MAIN, BREAK CHAMBER AND OUTFALL DESIGN AND SPECIFICATION - **MANUFACTURER/SUPPLIER.**
- RISING MAIN ROUTE - **ARCHITECT/M&E ENGINEER**.
- RISING MAIN, BREAK CHAMBER AND INSTALLATION - **MAIN CONTRACTOR.**
- FABRICATION AND CONSTRUCTION DRAWINGS - **MANUFACTURE/SUPPLIER.**
- REVIEW OF LAYOUT AND LEVELS TO COMPLY WITH DRAINAGE DESIGN - **MAIN CONTRACTOR'S DESIGNER (CURTINS).**
- REQUIREMENTS FOR APPROVAL OF PUMP STATIONS - **MANUFACTURE/SUPPLIER.**
- ACCEPTANCE AND APPROVAL FROM CONSTRUCTION - **MAIN CONTRACTOR**.
- APPROVAL OF TESTING REGIME - **MAIN CONTRACTOR.**

DESIGN PHILOSOPHY

SURFACE WATER DESIGN
THE DESIGN PROVIDES CAPACITY UP TO THE 100 YEAR 40% CLIMATE CHANGE EVENT.
SW FLOW RATE: 23.4L/S (BASED ON 50% OF EXISTING AS AGREED PRIOR)
STORAGE REQUIREMENT: 121.6M3
OUTFALL TO BE AGREED WITH UU (S106 APPLICATION)
LEVELS INDICATE THAT PUMPING WILL BE REQUIRED.
INFILTRATION IS NOT CONSIDERED APPROPRIATE FOR THIS SCHEME.

FOUL WATER DESIGN
ALL FOUL WATER DRAINAGE FROM UPPER FLOORS TO BE SUSPENDED
FOUL WATER PUMP STATION IN BASEMENT SERVES ONLY BASEMENT FACILITIES AND COURTYARD BAR

PROPOSED 2 PUMP STATIONS:
FOUL WATER PUMP STATION 1
FW PEAK FLOW RATE:5.2L/S
24h FOUL WATER STORAGE REQUIRED10.4 m3
ROUT ABOVE GROUND BY M&E ENGINEER

FOUL WATER PUMP STATION 2
GULLIES IN PLANT ROOM

	Peak flow l/s	Vertical length of rising main from base to basement slab (m)*	Verical length of rising main above basement slab, provided by M&E (m)	Total vertical head (m)	Horizontal length above the slab, provided by M&E (m)	Notes
SPS1	23.4	3.5	2.81	6.3	17.39	*assumed 0.5m sump
FPS1	5.2	3.5	2.67	6.2	2.68	24h storage
FPS2	1.0	1.0	2.8	3.8	10.2	no storage require as pump takes only gullies, asumed 0.30m sump

VERTICAL HEAD* BASED ON DUTY POINT PUMP CHAMBER SUPPLIER, IF DIFFERENT SUPPLIER CHOSEN THAN VERTICAL HEAD TO BE UPDATED

DRAWING BASED ON:

- FOUNDATION 078847-CUR-ZZ-FN-DR-S-1601 C03
- POPUP, DU,RWPS AND ROOF AREA 63068-HOA-ZZ-B1-DR-P-52-01P05
- SETTING OUT 63068-HOD-ZZ-B1-DR-A-5230 C02

RESIDUAL HAZARD REGISTER

HAZARD REF No.	ITEM	RESIDUAL HAZARD
2.01	PERCHED GROUNDWATER	PERCHED GROUDNWATER LEVEL LOCATED IN PROXIMITY OF THE PROPOSED SURFACE WATER TANK LOCATION,
3.01	SERVICES	UNDERGROUND SERVICES
5.02	EXISTING FOUNDATION	CROSSING PIPE UNDER EXISTING FOUNDATION, UNDERPINING

BASEMENT DRAINAGE KEY

- PROPOSED FOUL DRAINAGE (BELOW GROUND)
- PROPOSED SURFACE WATER DRAINAGE
- RISING MAIN - FOUL DRAINAGE ROUTE (TBC BY OTHERS)
- VENT PUMP STATION
- CABLES PUMP STATION
- VENT PIPE FROM TANK
- RISING MAIN - SURFACE WATER DRAINAGE ROUTE
- PROPOSED SW PUMP CHAMBER
- PROPOSED FW PUMP CHAMBER
- PROPOSED UNDERGROUND ATTENUATION STORAGE
- FG PROPOSED FOUL WATER GULLY
- SH PROPOSED SHOWER GULLY
- DP PROPOSED FOUL WATER DOWNPIPE
- RWP PROPOSED RAINWATER PIPE
- RE PROPOSED RODDING EYE
- BD PROPOSED BACKDROP
- FV FLAP VALVE
- PIPE CAST IN
- EXISTING FOUNDATION
- PROPOSED FOUNDATION
- SUSPENDED SLAB

curtins
Merchant Exchange, 17-19 Whitworth Street West, Manchester, M1 5WG
0161 236 2394
manchester@curtins.com
www.curtins.com
Civils & Structures • Transport Planning • Environmental • Infrastructure • Geotechnical • Conservation & Heritage • Principal Designer
Birmingham • Bristol • Cambridge • Cardiff • Douglas • Dublin • Edinburgh • Glasgow • Kendal • Leeds • Liverpool • London • Manchester • Nottingham

Status: AS BUILT

Project: ST MICHAELS - PHASE 1

Drg Title: DRAINAGE LAYOUT (BASEMENT)

Size:	Date:	Drawn By:	Designed By:	Checked By:
A1	15/08/21	CG	CG	CG

Scale: 1:50

Project No:	Originator:	Volume:	Level:	Type:	Role:	Category / Number:	Rev:
63068	CUR	XX	B1	DR	C	5200	C07

\\ma-fs-1\Projects\078001 - 079000\078847 - St Michaels\04-Production\4A-Models-Drawings\C-AD\92\

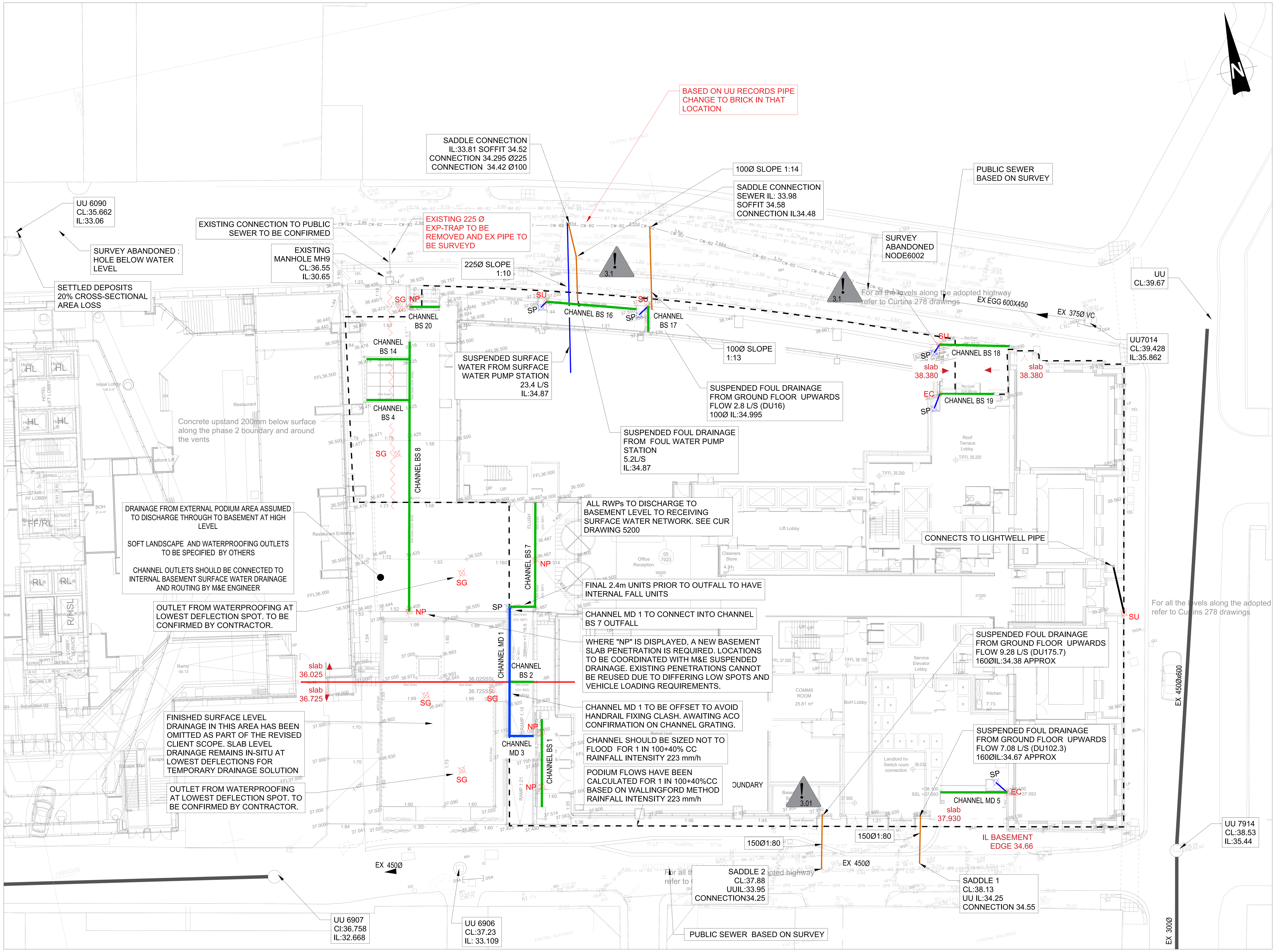

CHANNEL NAME	CHANNEL TYPE	GRATING TYPE	MINIMUM GROUND LEVEL	STRUCTURAL SLAB LEVEL	DEPTH OF BUILDUP (MIN)	CATCHMENT AREA (m²)	CHANNEL LENGTH (m)	LOADING REQUIREMENTS	CONNECTION TYPE	CONNECTION DIA.	FLOW RATE (l/s)
MD 1	M100D 0.0	SPECIAL INTERCEPT BAR	36.890	36.725	0.165	NO CATCHMENT	11.826	D400	SUMP UNIT	100mm	N/A
MD 2						OMITTED					
MD 3	M100D 0.0	SPECIAL INTERCEPT BAR	37.112	36.725	0.387	20.149	2.455	D400	END CAP	100mm	1.100
MD 4						OMITTED					
MD 5	M100D 0.0	SPECIAL INTERCEPT BAR	38.100	37.930	0.170	15.256	6.111	D400	END CAP	100mm	1.100
BS 1	M100D 0.0	BRICK SLOT	37.446	36.725	0.721	34.896	8.073	D400	SUMP UNIT	100mm	1.600
BS 2	M100D 0.0	BRICK SLOT	36.890	36.025	0.865	12.006	2.455	D400	END CAP	100mm	0.500
BS 3						OMITTED					
BS 4	M100D 0.0	BRICK SLOT	36.425	36.025	0.400	NO CATCHMENT	3.953	D400	END CAP	100mm	N/A
BS 5						OMITTED					
BS 6						OMITTED					
BS 7	M100D 0.0	BRICK SLOT	36.420	36.025	0.395	53.156	12.544	D400	SUMP UNIT	100mm	6.100
BS 8	M100D 10.0	BRICK SLOT	36.400	36.025	0.375	281.430	24.690	D400	SUMP UNIT	150mm	11.800
BS 9						OMITTED					
BS 10						OMITTED					
BS 11						OMITTED					
BS 12						OMITTED					
BS 13						OMITTED					
BS 14	M100D 0.0	BRICK SLOT	36.425	36.025	0.400	NO CATCHMENT	3.953	D400	END CAP	100mm	N/A
BS 15						OMITTED					
BS 16	M100D 0.0	BRICK SLOT	37.115	N/A	N/A	20.642	8.246	D400	SUMP UNIT	100mm	1.100
BS 17	M100D 0.0	BRICK SLOT	37.726	N/A	N/A	61.797	2.329	D400	SUMP UNIT	100mm	3.100
BS 18	M100D 0.0	BRICK SLOT	39.006	N/A	N/A	27.773	6.397	D400	SUMP UNIT	100mm	1.600
BS 19	M100D 0.0	BRICK SLOT	39.165	38.900	0.265	NO CATCHMENT	4.927	D400	END CAP	100mm	N/A
BS 20	M100D 0.0	BRICK SLOT	36.4	36.025	0.375	26.95	2.745	D400	SUMP UNIT	100mm	1.600

CHANNELS HAVE BEEN OMITTED AS PART OF THE CLIENTS REDUCED SCOPE OF WORKS

WHERE SHALLOW BUILD UP DEPTHS MEAN A SUMP OUTLET UNIT IS NOT VIABLE THEN A NARROW OPENING SIZE ON THE CHANNEL GRATING IS TO BE USED TO REDUCE THE AMOUNT OF DEBRIS TO ENTER THE SYSTEM EG. ACO SPECIAL INTERCEPT BAR

ACO FILTER BASKET TO BE INSTALLED AT EVERY CHANNEL DRAIN OUTLET LOCATION

GROUND FLOOR DRAINAGE KEY

- BASEMENT SLAB STEP
- ACO CHANNEL DRAINS (REFER TO TABLE)
- PROPOSED FOUL DRAINAGE (BELOW GROUND)
- PROPOSED SURFACE WATER DRAINAGE
- EXISTING PUBLIC COMBINED SEWER
- DRAINAGE TO BE ABANDONED
- EC / SU — ACO CHANNEL DRAIN OUTFAL TYPE: EC - END CAP; SU - SUMP UNIT
- SG — SLAB GULLY
- SP — SLAB PENETRATION LOCATION
- NP — ADDITIONAL SLAB PENETRATION LOCATION REQUIRE, ALSO TO BE PICKED UP BY M&E DESIGN

RESIDUAL HAZARD REGISTER

HAZARD REF No.	ITEM	RESIDUAL HAZARD
2.01	PERCHED GROUNDWATER	HIGH GROUND WATER LEVEL LOCATED IN PROXIMITY OF THE PROPOSED SURFACE WATER TANK LOCATION.
3.01	SERVICES	UNDERGROUND SERVICES
5.02	EXISTING FOUNDATION	CROSSING PIPE UNDER EXISTING FOUNDATION, UNDERPINING

GENERAL NOTES:

1. THIS DRAWING IS TO BE READ IN CONJUNCTION WITH ALL RELEVANT ARCHITECTS AND ENGINEERS DRAWINGS AND SPECIFICATIONS.
2. ALL ADOPTABLE DRAINAGE WORKS INCLUDING WORKS TO EXISTING PUBLIC SEWERS TO BE UNDERTAKEN IN ACCORDANCE WITH "SEWERS FOR ADOPTION 7th EDITION" AND "CIVIL ENGINEERING SPECIFICATION FOR THE WATER INDUSTRY 7th EDITION" AND CONSTRUCTED TO THE RELEVANT STATUTORY UNDERTAKERS DETAILS.
3. ALL PRIVATE DRAINAGE WORKS TO BE IN ACCORDANCE WITH CURTINS DRAINAGE SPECIFICATION, "CIVIL ENGINEERING SPECIFICATION FOR THE WATER INDUSTRY 7th EDITION", BS EN 752 2017 'DRAIN AND SEWER SYSTEMS OUTSIDE BUILDINGS' AND THE BUILDING REGULATIONS APPROVED 'DOCUMENT H'.
4. DO NOT SCALE THIS DRAWING. ANY AMBIGUITIES, OMISSIONS AND ERRORS ON DRAWINGS SHALL BE BROUGHT TO THE ENGINEERS ATTENTION IMMEDIATELY. ALL DIMENSIONS MUST BE CHECKED / VERIFIED ON SITE.
5. OUTFALL CONNECTION(S) SUBJECT TO AGREEMENT WITH THE APPROVING AUTHORITY.
6. ALL DIMENSIONS ARE IN METRES AND LEVELS IN METRES ABOVE ORDNANCE DATUM UNLESS OTHERWISE NOTED.
7. COVER LEVELS, GULLY POSITIONS, AND BUILDINGS LOCATION ARE APPROXIMATE AND SHALL BE CONFIRMED BY ARCHITECT/ LANDSCAPE ARCHITECT. CONTRACTOR TO ALLOW FOR ADJUSTMENT TO SUIT AGREED POSITIONS AND FINISHED LEVELS, AND CONFIRM ALL COVER LEVELS ON SITE.
8. ALL INTERNAL DRAINAGE CONNECTIONS ARE PROVIDED TO THE PENETRATION POSITIONS SHOWN ON ARCHITECT AND M&E DRAWINGS. REFER TO DIMENSIONED LOCATIONS AND DIAMETERS ON ARCHITECT'S GROUND FLOOR SETTING-OUT PLANS.
9. ALL UNDERGROUND FOUL DRAINAGE SHOULD BE SUITABLY VENTED AT OR NEAR TO THE HEAD OF RUNS.
10. ALL ACCESS FITTINGS, STACKS, RWP'S AND GULLIES TO BE RODDABLE. ALL TO HAVE LOW LEVEL RODDING ACCESS PLATES UNLESS AN ALTERNATIVE MEANS OF ACCESS IS AGREED. ACCESS POINT TO BE ABOVE ANY GROUND FLOOR CONNECTED APPLIANCE SPILL LEVEL.
11. LARGE ACCESS FITTING REQUIRED ABOVE GROUND WHERE GREATER THAN 12M UP TO 22M TO A JUNCTION. SMALL ACCESS FITTING REQUIRED UP TO 12M TO A JUNCTION.
12. ALL GULLY AND CHANNEL DRAIN OUTLETS AND TERMINATION POINTS TO BE TRAPPED AND RODDABLE. INTERNAL GULLIES AND CHANNEL DRAINS TO BE SPECIFIED BY OTHERS.
13. WHERE NO WC'S ARE CONNECTED UPSTREAM, UNDERSLAB FW DRAINAGE TO BE LAID AT 1:40 MIN. AFTER THE CONNECTION OF AT LEAST 1NO WC, A MIN. FALL OF 1:80 APPLIES.
14. ALL CONNECTIONS FROM POP-UPS TO BE LAID AT A CONSTANT GRADIENT TO JUNCTION/ INSPECTION CHAMBER/ MANHOLE UNLESS NOTED OTHERWISE. ANY ISSUES RELATING TO CLASHES WITH FOUNDATIONS ARE TO BE FORWARDED TO THE ENGINEER, ALLOWING SUFFICIENT TIME FOR AN ALTERNATIVE SOLUTION TO BE PROPOSED.
15. INVERT LEVELS AT MANHOLES/ INSPECTION CHAMBERS TO BE USED TO SET OUT PIPEWORK. PIPE GRADIENTS ARE SHOWN INDICATIVELY ONLY.
16. ALL PIPE DIAMETERS GIVEN ARE NOMINAL INTERNAL PIPE DIAMETERS.
17. ALL SEWERS, UNLESS AGREED OTHERWISE STATED, SHALL BE:
    - 100mm to 300mm DIA TO BE VITRIFIED CLAY.
18. AS AN ALTERNATIVE THE CONTRACTOR MAY USE AN APPROVED UNPLASTICISED POLYVINYL CHLORIDE (PVCU) WITH APPROVAL FROM THE ENGINEER.
19. SEWER PIPES TO BE LAID IN MAXIMUM 3 METRE LENGTHS UNLESS THERE IS A SPECIFIC OPERATIONAL NEED TO LAY LONGER LENGTHS.
20. THE FIRST PIPE OUT OF MANHOLES TO BE AS SHORT AS PRACTICABLE SO AS TO PROVIDE A FLEXIBLE JOINT AS CLOSE AS POSSIBLE TO THE OUTSIDE FACE OF THE CONCRETE SURROUND AND CONNECTED TO A LENGTH OF ROCKER PIPE.

DESIGN PHILOSOPHY

SURFACE WATER DESIGN
THE DESIGN PROVIDES CAPACITY UP TO THE 100 YEAR 40% CLIMATE CHANGE EVENT.
SW FLOW RATE: 23.4L/S (BASED ON 50% OF EXISTING AS AGREED PRIOR)
STORAGE REQUIREMENT: 124.6m^3
OUTFALL: IL TBC - AGREED WITH UU (S106 APPLICATION)
LEVELS INDICATE THAT PUMPING WILL BE REQUIRED.
INFILTRATION IS NOT CONSIDERED APPROPRIATE FOR THIS SCHEME.

FOUL WATER DESIGN
ALL FOUL WATER DRAINAGE FROM UPPER FLOORS TO BE SUSPENDED
FOUL WATER PUMP STATION IN BASEMENT SERVES ONLY BASEMENT FACILITIES

PROPOSED 2 PUMP STATIONS:
FOUL WATER PUMP STATION 1
FW PEAK FLOW RATE:5.2L/S
24h FOUL WATER STORAGE REQUIRED:10.4 m^3
ROUT ABOVE GROUND BY M&E ENGINEER

FOUL WATER PUMP STATION 2
GULLIES IN PLANT ROOM
TBC WASHDOWN FROM SPRINKLER TANK

PROPOSED UU MANHOLES INVERT LEVEL WITHIN BOTTLE STREET AND JACKSON ROAD BASED ON PROVIDED SURVEYED INVERT LEVELS ON 17.11.23

DRAWING BASED ON:

LANDSCAPE STM-63068-PLA-EX-ZZ-DR-L-3101 P03 02.07.24
TOPOGRAPHICAL SURVEY57610/TOPO 15.09.21
UTILITIES SURVEY SUMO -04980 10/21
UU RECORDS ref 14/1119358 30.06.2015

CONSTRUCTION RECORD - FINAL CONSTRUCTION
THE INFORMATION IS BASED ON CONFIRMATION FROM THE CONTRACTOR OF THE INSTALLED WORKS. THERE MAY BE VARIATIONS ON SITE WHICH ARE NOT REFLECTED ON THIS DRAWING AND HAS NOT BEEN VERIFIED BY CURTINS.

GENERAL NOTES:

21. ALL NEW CONNECTIONS INTO EXISTING MANHOLES (OR INTO EXISTING SEWERS) TO BE 'SOFFITS LEVEL' UNLESS OTHERWISE NOTED.
22. ALL ADOPTABLE DRAINAGE PIPES WILL REQUIRE A MINIMUM OF 1200mm COVER, IN ACCORDANCE WITH SEWERAGE UNDERTAKERS REQUIREMENTS. WHERE THIS IS NOT ACHIEVED, IT WILL BE NECESSARY TO AGREE THE BED AND SURROUND DETAIL.
23. ALL PRIVATE DRAINAGE PIPES WITH A COVER OF LESS THAN 600mm IN NON-TRAFFICKED AREAS AND LESS THAN 1200mm IN TRAFFICKED AREAS TO BE BEDDED AND SURROUNDED IN CONCRETE (CLASS Z). COMPRESSIBLE MATERIAL SHALL BE PROVIDED AT EVERY PIPE JOINT. WHERE COVER EXCEEDS THIS DEPTH, PIPES ARE TYPICALLY BEDDED AND SURROUNDED IN CLASS S. REFER TO PIPE EMBEDMENT DETAILS DRAWING FOR SPECIFIC TYPES.
24. WHERE DRAINAGE PIPES ARE LESS THAN 300mm BELOW THE UNDERSIDE OF THE GROUND FLOOR SLAB, CONCRETE ENCASEMENT IS REQUIRED (CLASS Z). COMPRESSIBLE JOINTS ARE TO BE PROVIDED AT EVERY PIPE JOINT WITHIN THE CONCRETE.
25. WHERE PIPES ARE MORE THAN 300mm BELOW THE UNDERSIDE OF THE SLAB, CLASS S BEDDING IS ACCEPTABLE.
26. SULPHATE RESISTANT CEMENT (C20-DC2) AND PRECAST CONCRETE PRODUCTS MUST BE USED OR A LABORATORY REPORT PROVIDED TO PROVE THAT SUCH PRECAUTIONS ARE NOT REQUIRED.
27. WHERE FOUL SEWERS RUN ABOVE SURFACE SEWERS, CONCRETE PROTECTION MAY BE REQUIRED AT CROSSOVERS TO PREVENT ANY POTENTIAL CONTAMINATION.
28. ALL CONNECTIONS PASSING THROUGH BASES OR EDGE BEAMS TO BE IN SEALED SLEEVES. ALTERNATIVELY CONNECTIONS MAY BE CAST-IN WITH FLEXIBLE JOINTS NOT GREATER THAN 150MM FROM FACE OF CONCRETE.
29. THE CHAMBER SIZE OF MANHOLES WITH MORE THAN ONE CONNECTION MAY NEED TO BE INCREASED TO ACCOMMODATE THE CONNECTIONS AND BENDS.
30. ALL MANHOLE COVERS IN BLOCK/SLAB AND EXTERNAL PAVING AREAS TO HAVE RECESSED COVERS OF THE APPROPRIATE GRADE TO ACCEPT ARCHITECT'S PAVING PROPOSAL.
31. ALL INTERNAL COVERS TO HAVE MECHANICALLY JOINTED CORNERS AND DOUBLE SEALED WITH RECESSED TRAY TO ALLOW FOR FINISHES.
32. UNLESS NOTED OTHERWISE IN THE MANHOLE SCHEDULE, ALL MANHOLE, GULLY AND CHANNEL COVERS (IRONWORK) SHOULD BE THE FOLLOWING SPECIFICATION:
    - B125 LOAD CLASS IN PEDESTRIAN AREAS
    - D400 LOAD CLASS IN VEHICULAR AREAS.
33. ALL PROPRIETARY PRODUCTS TO BE INSTALLED IN STRICT ACCORDANCE WITH THE MANUFACTURERS REQUIREMENTS, INSTRUCTIONS AND RECOMMENDATIONS.
34. THE DESIGN IS BASED ON A GRAVITY RAINWATER SYSTEM.
35. ALL ACO CHANNELS TO BE MINIMUM D400 RATED.

Rev:	Description:	Date:	By:	Chkd:
C16	FINAL CONSTRUCTION ISSUE	02.12.24	JC	RB
C15	CHANNEL BS1 & BS3 COMBINED	15.10.24	JC	EBR
C14	ADDITIONAL SLOT DRAIN ADDED	26.09.24	EBR	RB
C13	ADDITIONAL PENETRATION ADDED	24.09.24	EBR	RB
C12	ACOs AMENDED	29.08.24	EBR	RB
C11	CHANNELS & OUTFALL LOCATIONS AMENDED	13.08.24	EBR	RB
C10	CHANNEL BS16 REFERENCE CHANGED	31.07.24	EBR	RB
C09	SCOPE REDUCED	29.07.24	EBR	RB
C08	ACO DRAINAGE & PENETRATIONS AMENDED	10.07.24	EBR	RB
C07	SADDLE CONNECTION ADDED	12.03.24	JC	MW
C06	SLOT DRAIN UPDATED	09.02.24	CS	MW
C05	SADDLE CONNECTION TO PUBLIC SEWER, BOTTLE STREET	11.01.24	MW	MW
C04	UPDATES CLOUDED	01.12.23	CS	MW
C03	UPDATES CLOUDED	04.08.23	KS	MW
C02	DRAINAGE LAYOUT REVISION	31.05.23	WC	MW
C01	ISSUED FOR CONSTRUCTION	26.01.23	MW	MW
P07	DRAINAGE CHANNELS UPDATED	08.09.22	TH	MW
P06	STAGE 4 UPDATE	15.08.22	CS	MW
P05	STAGE 4 ISSUE	30.06.22	MW	MW
P04	UPDATED STAGE 3	29.04.22	MW	MW
P03	UPDATE STAGE 3	07.04.22	MW	MW
P02	STAGE 3	04.04.22	MW	MW
P01	STAGE 2	17.09.21	CD	AN

curtins
Merchant Exchange, 17-19 Whitworth Street West, Manchester, M1 5WG
0161 236 2394
manchester@curtins.com
www.curtins.com

Civils & Structures • Transport Planning • Environmental • Infrastructure • Geotechnical • Conservation & Heritage • Principal Designer
Birmingham • Bristol • Cambridge • Cardiff • Douglas • Dublin • Edinburgh • Glasgow • Kendal • Leeds • Liverpool • London • Manchester • Nottingham

Status: AS BUILT

Project: ST MICHAELS - PHASE 1

Drg Title: DRAINAGE LAYOUT (GROUND FLOOR)

Size:	Date:	Drawn By:	Designed By:	Checked By:
A1	15/08/21	CG	CG	CG
Scale: 1:50				

Project No:	Originator:	Volume:	Level:	Type:	Role:	Category / Number:	Rev:
63068	CUR	XX	GF	DR	C	5201	C16

\\ma-fs-1\Projects\078001 - 079000\078847 - St Michaels\Q4-Production\4A-Models-Drawings\C\CAD\92\

MANHOLE SCHEDULE SURFACE WATER

MH REF	CL (mAOD)	IL (mAOD)	DEPTH TO SOFFIT (m)	DS PIPE DIA (mm)	MH DIA (mm)	MH TYPE	CATCHPIT	CATCHPIT Depth (mm)	COVER SIZE (mm)	COVER CLASS	COVER TYPE	RECESSED	RESTRICTED ACCESS	BACKDROP IL (m)	COMMENTS	EASTING	NORTHING
SW01	34.24	33.57	0.57	100	450	PPIC	N		450X450	A15	DOUBLE SEALED	YES	N		UNRESTRICTED;	383726.214	397996.84
SW02	34.24	32.81	1.28	150	450	PPIC	Y	350	450X450	A15		YES	Y		RESTRICTED ACCESS 350mm DIA MAX; CP DEPTH: 350mm	383727.134	398006.564
SW02A	34.24	33.54	0.60	100	450	PPIC	N		450X450	A15		YES	N		UNRESTRICTED;	383730.37	398015.729
SW04	32.80	32.10	0.40	300	600	PPIC	N		600X600	A15	DOUBLE SEALED	No	N		UNRESTRICTED;	383719.019	398008.311
SW06	32.80	31.83	0.82	150	450	PPIC	N		450X450	A15	DOUBLE SEALED	No	N		UNRESTRICTED;	383717.893	398001.24
SW07	32.80	31.74	0.91	150	450	PPIC	Y	350	450X450	B125		No	N		UNRESTRICTED; CP DEPTH: 350mm	383709.013	398003.079
SW07A	32.80	31.59	1.06	150	450	PPIC	N		450X450	B125		No	Y		RESTRICTED ACCESS 350mm DIA MAX;	383694.516	398006.03
SW08	32.80	31.43	1.15	225	600	PPIC	Y	350	600X600	B125		No	Y		RESTRICTED ACCESS 350mm DIA MAX; CP DEPTH: 350mm	383685.811	398007.8
SW09	32.80	30.56	1.94	300	600	PPIC	Y	350	600X600	B125		No	Y		RESTRICTED ACCESS 350mm DIA MAX; CP DEPTH: 350mm, VENTED COVER	383686.747	398012.096
SW09A	32.80	32.14	0.51	150	450	PPIC	N		450X450	B125		No	N		UNRESTRICTED;	383676.516	398011.332
SW10	32.80	31.88	0.77	150	450	PPIC	N		450X450	B125		No	N		UNRESTRICTED;	383722.2	398020.486
SW12	32.80	31.68	0.97	150	450	PPIC	N		450X450	B125	DOUBLE SEALED	No	N		UNRESTRICTED;	383706.6	398023.791
SW13	32.80	30.56	1.94	300	1200	TYPE 2	Y	350	600X600	B125	DOUBLE SEALED	No	N		UNRESTRICTED; CP DEPTH: 350mm	383690.183	398027.609
SW13A	32.80	32.11	0.54	150	450	PPIC	Y	350	450X450	B125		No	N		UNRESTRICTED; CP DEPTH: 350mm	383674.489	398031.528
SW13B	32.80	31.90	0.75	150	450	PPIC	N		450X450	B125		No	N		UNRESTRICTED;	383693.291	398036.888
SW13C	OMITED																
SPS1	32.80	30.45	PUMP STATION BY SUPPLIER							A15		No	N		UNRESTRICTED;	383695.766	398017.474

MANHOLE SCHEDULE FOUL WATER

MH REF	CL (mAOD)	IL (mAOD)	DEPTH TO SOFFIT (m)	DS PIPE DIA (mm)	MH DIA (mm)	MH TYPE	CATCHPIT	CATCHPIT Depth (mm)	COVER SIZE (mm)	COVER CLASS	COVER TYPE	RECESSED	RESTRICTED ACCESS	BACKDROP IL (m)	COMMENTS	EASTING	NORTHING
FW01	34.24	33.46	0.68	100	450	PPIC	N		450x450	A15	DOUBLE SEALED	YES	N		UNRESTRICTED;	383726.591	397990.533
FW02	34.24	33.42	0.72	100	450	PPIC	N		450X450	A15		YES	N		UNRESTRICTED;	383727.33	397994.067
FW03	34.24	33.28	0.86	100	450	PPIC	N		450X450	A15		YES	N		UNRESTRICTED;	383729.573	398004.594
FW04	34.24	33.24	0.90	100	450	PPIC	N		450X450	A15		YES	N		UNRESTRICTED;	383730.275	398007.971
FW05	34.24	33.11	1.03	100	450	PPIC	N		450X450	A15		YES	N	33.64	UNRESTRICTED;	383732.045	398016.405
FW5A	34.24	33.47	0.67	100	450	PPIC	N		450X450	A15		YES	N		UNRESTRICTED;	383732.984	398020.865
FW06	34.24	33.05	1.09	100	450	PPIC	N		450X450	A15		YES	N		UNRESTRICTED;	383727.497	398017.451
FW07	32.80	32.23	0.47	100	450	PPIC	N		450X450	B125		No	N		UNRESTRICTED;	383723.661	398019.624
FW07a	32.80	32.15	0.55	100	450	PPIC	N		450X450	B125		No	N		UNRESTRICTED;	383717.159	398021.016
FW8A	32.80	31.34	1.36	100	450	PPIC	N		450X450	B125		No	Y	31.92	RESTRICTED ACCESS 350mm DIA MAX;	383698.533	398024.972
FW8b	32.80	31.21	1.49	100	450	PPIC	N		450X450	B125		No	Y		RESTRICTED ACCESS 350mm DIA MAX;	383691.255	398026.558
FW11	32.80	31.89	0.81	100	450	PPIC	N		450X450	B125		No	N		UNRESTRICTED;	383694.964	398008.702
FW11A	32.80	32.23	0.47	100	450	PPIC	N		450X450	B125		No	N		UNRESTRICTED;	383685.856	398001.186
FW11B	32.80	32.08	0.62	100	450	PPIC	N		450X450	B125		No	N		UNRESTRICTED;	383687.609	398006.513
FW11C	32.80	31.63	1.07	100	450	PPIC	N		450X450	A15		No	N		UNRESTRICTED;	383696.657	398016.483
FW12	32.80	31.87	0.83	100	450	PPIC	N		450X450	B125		No	N		UNRESTRICTED;	383673.871	398040.306
FPS1	32.80	PUMP STATION BY SUPPLIER								B125		No	N		UNRESTRICTED;	383693.005	398036.182
FPS2	30.20	PUMP STATION BY SUPPLIER								A15		No	N		UNRESTRICTED;	383680.625	398024.293
MANHOLES ON PUBLIC SEWER SUBJECT TO UU APPROVAL																	
UU1	38.13	34.25	3.43	450	1500	TYPE A1/A2	N		600X600	D400	SINGLE SEALED	NO	NO		UNRESTRICTED;	383711.132	397984.952
UU2	37.88	33.95	3.48	450	1500	TYPE A1/A2	N		600X600	D400					UNRESTRICTED;	383702.112	397986.285
UU3	37.53	33.98	SADDLE CONNECTION													383699.128	398047.285
UU4	37.13	33.81	SADDLE CONNECTION													383691.809	398049.091

GENERAL NOTES:

GENERAL NOTES:

1. THIS DRAWING IS TO BE READ IN CONJUNCTION WITH ALL RELEVANT ARCHITECTS AND ENGINEERS DRAWINGS AND SPECIFICATIONS.
2. ALL ADOPTABLE DRAINAGE WORKS INCLUDING WORKS TO EXISTING PUBLIC SEWERS TO BE UNDERTAKEN IN ACCORDANCE WITH "SEWERS FOR ADOPTION 7th EDITION" AND "CIVIL ENGINEERING SPECIFICATION FOR THE WATER INDUSTRY 7th EDITION" AND CONSTRUCTED TO THE RELEVANT STATUTORY UNDERTAKERS DETAILS.
3. ALL PRIVATE DRAINAGE WORKS TO BE IN ACCORDANCE WITH CURTINS DRAINAGE SPECIFICATION, "CIVIL ENGINEERING SPECIFICATION FOR THE WATER INDUSTRY 7th EDITION", BS EN 752 2017 'DRAIN AND SEWER SYSTEMS OUTSIDE BUILDINGS' AND THE BUILDING REGULATIONS APPROVED 'DOCUMENT H'.
4. ANY AMBIGUITIES, OMISSIONS AND ERRORS ON DRAWINGS SHALL BE BROUGHT TO THE ENGINEERS ATTENTION IMMEDIATELY. ALL DIMENSIONS MUST BE CHECKED / VERIFIED ON SITE.
5. ALL DIMENSIONS ARE IN METRES UNLESS NOTED OTHERWISE.
6. THE CHAMBER SIZE OF MANHOLES WITH MORE THAN ONE CONNECTION MAY NEED TO BE INCREASED TO ACCOMMODATE THE CONNECTIONS AND BENDS.
7. COVER LEVELS BASED ON ARCHITECT PLAN63068-HOD-ZZ-B1-DR-A-2001
8. COVER LEVELS, GULLY POSITIONS, AND BUILDING LOCATION ARE APPROXIMATE AND SHALL BE CONFIRMED BY ARCHITECT/LANDSCAPE ARCHITECT. CONTRACTOR TO ALLOW FOR ADJUSTMENT TO SUIT AGREED POSITIONS AND FINISHED LEVELS, AND CONFIRM ALL COVER LEVELS ON SITE.
9. ALL INTERNAL COVERS TO HAVE MECHANICALLY JOINTED CORNERS AND DOUBLE SEALED WITH RECESSED TRAY TO ALLOW FOR FINISHES.
10. ALL MANHOLE, GULLY AND CHANNEL (ACCESS/OUTLET) COVERS (IRONWORK) SHOULD BE THE FOLLOWING SPECIFICATION:
    - A15 LOAD CLASS IN PEDESTRIAN AREAS
    - B125 LOAD CLASS IN CAR PARK
    - D400 LOAD CLASS IN STREET.

    ANY AMBIGUITIES ON DRAWINGS/ACCESS AND MAINTENANCE STRATEGY SHALL BE BROUGHT TO THE ENGINEERS ATTENTION IMMEDIATELY.
11. ALL SURFACE CHANNEL ACCESS BOXES/OUTLET BOXES IN BLOCK/SLAB AND EXTERNAL PAVING AREAS MAY REQUIRE RECESSED COVERS OF THE APPROPRIATE GRADE TO ACCEPT THE LANDSCAPE ARCHITECT'S PAVING PROPOSAL. TBC BY LANDSCAPE ARCHITECT AND SUBJECT TO AVAILABILITY FROM MANUFACTURER.
12. ALL PROPRIETARY PRODUCTS TO BE INSTALLED IN STRICT ACCORDANCE WITH THE MANUFACTURERS REQUIREMENTS, INSTRUCTIONS AND RECOMMENDATIONS.

CONSTRUCTION RECORD - FINAL CONSTRUCTION

THE INFORMATION IS BASED ON CONFIRMATION FROM THE CONTRACTOR OF THE INSTALLED WORKS. THERE MAY BE VARIATIONS ON SITE WHICH ARE NOT REFLECTED ON THIS DRAWING AND HAS NOT BEEN VERIFIED BY CURTINS.

Rev:	Description:	Date:	By:	Chkd:
C06	FINAL CONSTRUCTION ISSUE	02.12.24	JC	RB
C05	SADDLE CONNECTION ADDED	12.03.24	JC	MW
C04	UU MANHOLES UPDATED	01.12.23	MW	MW
C03	UPDATES CLOUDED	26.01.23	MW	MW
C02	STAGE 5 ISSUE- UPDATES AS CLOUDED	21.10.22	MW	MW
C01	STAGE 5 ISSUE	02.09.22	MW	MW
P03	STAGE 3 UPDATES	17.05.22	MW	MW
P02	STAGE 3 UPDATES	05.05.22	MW	MW
P01	STAGE 3 ISSUE	05.04.22	MW	MW

curtins

Merchant Exchange, 17-19 Whitworth Street West, Manchester, M1 5WG
0161 236 2394
manchester@curtins.com
www.curtins.com

Civils & Structures • Transport Planning • Environmental • Infrastructure • Geotechnical • Conservation & Heritage • Principal Designer
Birmingham • Bristol • Cambridge • Cardiff • Douglas • Dublin • Edinburgh • Glasgow • Kendal • Leeds • Liverpool • London • Manchester • Nottingham

Status: AS BUILT

Project: ST MICHAELS - PHASE 1

Drg Title: MANHOLE SCHEDULE

Size:	Date:	Drawn By:	Designed By:	Checked By:
A1	04.04.22	TH	MW	MW

Scale: NTS

Project No:	Originator:	Zone:	Level:	Type:	Discipline:	Category / Number:	Rev:
63068	- CUR	- XX	- XX	- DR	- C -	5235	-C06

\\ma-fs-1\Projects\078001 - 078000\078847 - St Michaels\04-Production\4A-Models-Drawings\CAD\92\

Appendix F

Pumping Station Commissioning Certificates

Copyright © 2023 Curtins Consulting Ltd

Kingspan Water & Energy
Service & Support Solutions

THIS IS TO CERTIFY THAT
KINGSPAN WATER & ENERGY SERVICES

HAS SUCCESSFULLY COMPLETED COMMISSIONING OF:

0.9 x 1.5m PUMP CHAMBER 0.7m| Serial Number - 01891618

LOCATION:

ST MICHAELS JSCKSONS ROW, SOUTHMILL STREET, MANCHESTER, M2 5GB

Date: 18/12/2024

Signed: Michael Cain

BRITISH WATER
expertise worldwide

Kingspan Water & Energy Service
UK: 0333240 6868 | NI: 028 3836 4600 | ROI: 0818 543 500
Email: helpingyou@kingspan.com
Kingspanservice.com

SafeContractor APPROVED

Kingspan Water & Energy
Service & Support Solutions

THIS IS TO CERTIFY THAT
KINGSPAN WATER & ENERGY SERVICES

HAS SUCCESSFULLY COMPLETED COMMISSIONING OF:

TWIN PUMP CHAMBER 1800 x 3500| Serial Number - 01912521

LOCATION:

ST MICHAELS JSCKSONS ROW, SOUTHMILL STREET, MANCHESTER, M2 5GB

Date: 18/12/2024

Signed: Michael Cain

BRITISH WATER
expertise worldwide

Kingspan Water & Energy Service

UK: 0333240 6868 | NI: 028 3836 4600 | ROI: 0818 543 500

Email: helpingyou@kingspan.com

Kingspanservice.com

SafeContractor APPROVED

Kingspan Water & Energy
Service & Support Solutions

THIS IS TO CERTIFY THAT
KINGSPAN WATER & ENERGY SERVICES

HAS SUCCESSFULLY COMPLETED COMMISSIONING OF:

TWIN PUMP CHAMBER 2600 x 4000 | Serial Number - 01934587

LOCATION:

ST MICHAELS JSCKSONS ROW, SOUTHMILL STREET, MANCHESTER, M2 5GB

Date: 18/12/2024

Signed: Michael Cain

BRITISH WATER
expertise worldwide

Kingspan Water & Energy Service

UK: 0333240 6868 | NI: 028 3836 4600 | ROI: 0818 543 500

Email: helpingyou@kingspan.com

Kingspanservice.com

SafeContractor APPROVED

Appendix G

Surface Water Drainage Calculations

Copyright © 2023 Curtins Consulting Ltd

STORM SEWER DESIGN by the Modified Rational Method

Design Criteria for Storm

Pipe Sizes STANDARD Manhole Sizes STANDARD

FSR Rainfall Model - England and Wales

Return Period (years)	100	PIMP (%)	100
M5-60 (mm)	18.000	Add Flow / Climate Change (%)	0
Ratio R	0.361	Minimum Backdrop Height (m)	0.200
Maximum Rainfall (mm/hr)	50	Maximum Backdrop Height (m)	1.500
Maximum Time of Concentration (mins)	30	Min Design Depth for Optimisation (m)	1.200
Foul Sewage (l/s/ha)	0.000	Min Vel for Auto Design only (m/s)	1.00
Volumetric Runoff Coeff.	0.750	Min Slope for Optimisation (1:X)	500

Designed with Level Soffits

Network Design Table for Storm

- Indicates pipe length does not match coordinates
« - Indicates pipe capacity < flow

PN	Length (m)	Fall (m)	Slope (1:X)	I.Area (ha)	T.E. (mins)	Base Flow (l/s)	k (mm)	HYD SECT	DIA (mm)	Section Type	Auto Design
S1.000	5.092	0.064	79.6	0.008	5.00	0.0	0.600	o	100	Pipe/Conduit	
S1.001	9.767	0.122	80.0	0.012	0.00	0.0	0.600	o	100	Pipe/Conduit	
S2.000	5.060	0.063	80.3	0.004	5.00	0.0	0.600	o	100	Pipe/Conduit	
S2.001	9.860	0.123	80.0	0.007	0.00	0.0	0.600	o	100	Pipe/Conduit	
S1.002	1.900#	0.380	5.0	0.010	0.00	0.0	0.600	o	150	Pipe/Conduit	
S1.003	3.934	0.112	35.0	0.000	0.00	0.0	0.600	o	150	Pipe/Conduit	
S1.004	7.027	0.047	150.0	0.023	0.00	0.0	0.600	o	300	Pipe/Conduit	
S1.005	16.361	0.109	150.0	0.023	0.00	0.0	0.600	o	300	Pipe/Conduit	

Network Results Table

PN	Rain (mm/hr)	T.C. (mins)	US/IL (m)	Σ I.Area (ha)	Σ Base Flow (l/s)	Foul (l/s)	Add Flow (l/s)	Vel (m/s)	Cap (l/s)	Flow (l/s)
S1.000	50.00	5.10	33.630	0.008	0.0	0.0	0.0	0.86	6.8	1.1
S1.001	50.00	5.29	33.566	0.020	0.0	0.0	0.0	0.86	6.8	2.7
S2.000	50.00	5.10	33.600	0.004	0.0	0.0	0.0	0.86	6.7	0.5
S2.001	50.00	5.29	33.537	0.011	0.0	0.0	0.0	0.86	6.8	1.5
S1.002	50.00	5.30	32.810	0.041	0.0	0.0	0.0	4.54	80.2	5.6
S1.003	50.00	5.33	32.410	0.041	0.0	0.0	0.0	1.71	30.2	5.6
S1.004	50.00	5.43	32.100	0.064	0.0	0.0	0.0	1.28	90.6	8.7
S1.005	50.00	5.64	32.053	0.087	0.0	0.0	0.0	1.28	90.6	11.8

©1982-2018 Innovyze

Network Design Table for Storm

PN	Length (m)	Fall (m)	Slope (1:X)	I.Area (ha)	T.E. (mins)	Base Flow (l/s)	k (mm)	HYD SECT	DIA (mm)	Section Type	Auto Design
S1.006	1.770	0.136	13.0	0.000	0.00	0.0	0.600	o	300	Pipe/Conduit	
S1.007	7.492	0.050	150.0	0.000	0.00	0.0	0.600	o	300	Pipe/Conduit	
S3.000	9.008	0.090	100.1	0.025	5.00	0.0	0.600	o	150	Pipe/Conduit	
S3.001	2.214	0.022	100.0	0.010	0.00	0.0	0.600	o	150	Pipe/Conduit	
S3.002	12.373	0.124	99.8	0.023	0.00	0.0	0.600	o	150	Pipe/Conduit	
S3.003	9.081	0.091	99.8	0.009	0.00	0.0	0.600	o	150	Pipe/Conduit	
S3.004	4.101	0.051	80.4	0.034	0.00	0.0	0.600	o	225	Pipe/Conduit	
S4.000	10.299	0.126	81.7	0.045	5.00	0.0	0.600	o	150	Pipe/Conduit	
S3.005	3.333	0.015	222.2	0.000	0.00	0.0	0.600	o	300	Pipe/Conduit	
S5.000	15.917	0.199	80.0	0.044	5.00	0.0	0.600	o	150	Pipe/Conduit	
S5.001	16.858	0.169	99.8	0.029	0.00	0.0	0.600	o	150	Pipe/Conduit	
S6.000	1.348	0.017	79.3	0.027	5.00	0.0	0.600	o	150	Pipe/Conduit	
S7.000	13.195	0.132	100.0	0.005	5.00	0.0	0.600	o	100	Pipe/Conduit	
S6.001	16.365	0.205	79.8	0.000	0.00	0.0	0.600	o	150	Pipe/Conduit	

Network Results Table

PN	Rain (mm/hr)	T.C. (mins)	US/IL (m)	Σ I.Area (ha)	Σ Base Flow (l/s)	Foul (l/s)	Add Flow (l/s)	Vel (m/s)	Cap (l/s)	Flow (l/s)
S1.006	50.00	5.65	31.944	0.087	0.0	0.0	0.0	4.38	309.9	11.8
S1.007	50.00	5.74	31.808	0.087	0.0	0.0	0.0	1.28	90.6	11.8
S3.000	50.00	5.15	31.830	0.025	0.0	0.0	0.0	1.00	17.7	3.4
S3.001	50.00	5.19	31.740	0.035	0.0	0.0	0.0	1.00	17.8	4.7
S3.002	50.00	5.39	31.718	0.058	0.0	0.0	0.0	1.01	17.8	7.9
S3.003	50.00	5.54	31.594	0.067	0.0	0.0	0.0	1.01	17.8	9.1
S3.004	50.00	5.59	31.428	0.101	0.0	0.0	0.0	1.46	58.0	13.7
S4.000	50.00	5.15	32.140	0.045	0.0	0.0	0.0	1.11	19.7	6.1
S3.005	50.00	5.64	30.560	0.146	0.0	0.0	0.0	1.05	74.3	19.8
S5.000	50.00	5.24	31.880	0.044	0.0	0.0	0.0	1.12	19.9	6.0
S5.001	50.00	5.52	31.681	0.073	0.0	0.0	0.0	1.01	17.8	9.9
S6.000	50.00	5.02	32.220	0.027	0.0	0.0	0.0	1.13	20.0	3.7
S7.000	50.00	5.29	32.290	0.005	0.0	0.0	0.0	0.77	6.0	0.7
S6.001	50.00	5.53	32.108	0.032	0.0	0.0	0.0	1.13	19.9	4.3

©1982-2018 Innovyze

Network Design Table for Storm

PN	Length (m)	Fall (m)	Slope (1:X)	I.Area (ha)	T.E. (mins)	Base Flow (l/s)	k (mm)	HYD SECT	DIA (mm)	Section Type	Auto Design
S8.000	3.680	0.037	100.0	0.018	5.00	0.0	0.600	o	100	Pipe/Conduit	
S8.001	9.815	0.123	80.0	0.007	0.00	0.0	0.600	o	150	Pipe/Conduit	
S5.002	12.641	0.056	225.7	0.000	0.00	0.0	0.600	o	300	Pipe/Conduit	
S1.008	3.718	0.017	225.0	0.085	0.00	0.0	0.600	o	300	Pipe/Conduit	
S1.009	3.718	0.017	225.0	0.000	0.00	0.0	0.600	o	225	Pipe/Conduit	

Network Results Table

PN	Rain (mm/hr)	T.C. (mins)	US/IL (m)	Σ I.Area (ha)	Σ Base Flow (l/s)	Foul (l/s)	Add Flow (l/s)	Vel (m/s)	Cap (l/s)	Flow (l/s)
S8.000	50.00	5.08	32.000	0.018	0.0	0.0	0.0	0.77	6.0	2.4
S8.001	50.00	5.23	31.913	0.025	0.0	0.0	0.0	1.12	19.9	3.4
S5.002	50.00	5.73	30.560	0.130	0.0	0.0	0.0	1.04	73.7	17.6
S1.008	50.00	5.80	30.500	0.448	0.0	0.0	0.0	1.04	73.8	60.7
S1.009	50.00	5.87	30.450	0.448	0.0	0.0	0.0	0.87	34.5«	60.7

©1982-2018 Innovyze

Manhole Schedules for Storm

MH Name	MH CL (m)	MH Depth (m)	MH Connection	MH Diam.,L*W (mm)	PN	Pipe Out Invert Level (m)	Diameter (mm)	PN	Pipes In Invert Level (m)	Diameter (mm)	Backdr (mm)
Sgully	34.240	0.610	Open Manhole	100	S1.000	33.630	100				
S1	34.240	0.674	Open Manhole	450	S1.001	33.566	100	S1.000	33.566	100	
Sgully	34.240	0.640	Open Manhole	100	S2.000	33.600	100				
S2a	34.240	0.703	Open Manhole	450	S2.001	33.537	100	S2.000	33.537	100	
S2	34.240	1.430	Open Manhole	450	S1.002	32.810	150	S1.001	33.444	100	5
								S2.001	33.414	100	5
Schange	34.240	1.830	Junction		S1.003	32.410	150	S1.002	32.430	150	
S4	32.800	0.700	Open Manhole	600	S1.004	32.100	300	S1.003	32.298	150	
Sjunction	32.800	0.747	Junction		S1.005	32.053	300	S1.004	32.053	300	
Sjunction	32.800	0.856	Junction		S1.006	31.944	300	S1.005	31.944	300	
SJUNCTION	32.800	0.992	Junction		S1.007	31.808	300	S1.006	31.808	300	
S6	32.800	0.970	Open Manhole	450	S3.000	31.830	150				
S7	32.800	1.060	Open Manhole	450	S3.001	31.740	150	S3.000	31.740	150	
Sjunction	32.800	1.082	Junction		S3.002	31.718	150	S3.001	31.718	150	
S7a	32.800	1.206	Open Manhole	450	S3.003	31.594	150	S3.002	31.594	150	
S8	32.800	1.372	Open Manhole	450	S3.004	31.428	225	S3.003	31.503	150	
S09A	32.800	0.660	Open Manhole	450	S4.000	32.140	150				
S9	32.800	2.240	Open Manhole	600	S3.005	30.560	300	S3.004	31.377	225	7
								S4.000	32.014	150	13
S10	32.800	0.920	Open Manhole	450	S5.000	31.880	150				
S12	32.800	1.119	Open Manhole	450	S5.001	31.681	150	S5.000	31.681	150	
Srwp	32.800	0.580	Open Manhole	150	S6.000	32.220	150				
Srwp	32.800	0.510	Open Manhole	100	S7.000	32.290	100				
S13a	32.800	0.692	Open Manhole	450	S6.001	32.108	150	S6.000	32.203	150	
								S7.000	32.158	100	
Srwp	32.800	0.800	Open Manhole	100	S8.000	32.000	100				
S13b	32.800	0.887	Open Manhole	450	S8.001	31.913	150	S8.000	31.963	100	
S13	32.800	2.240	Open Manhole	1200	S5.002	30.560	300	S5.001	31.512	150	8
								S6.001	31.903	150	11
								S8.001	31.791	150	10
S tank	32.800	2.300	Open Manhole	100	S1.008	30.500	300	S1.007	31.758	300	12
								S3.005	30.545	300	
								S5.002	30.504	300	
Spump	32.800	2.350	Open Manhole	1200	S1.009	30.450	225	S1.008	30.483	300	1
S	33.000	2.567	Open Manhole	0		OUTFALL		S1.009	30.433	225	

©1982-2018 Innovyze

Area Summary for Storm

Pipe Number	PIMP Type	PIMP Name	PIMP (%)	Gross Area (ha)	Imp. Area (ha)	Pipe Total (ha)
1.000	-	-	100	0.008	0.008	0.008
1.001	-	-	100	0.012	0.012	0.012
2.000	-	-	100	0.004	0.004	0.004
2.001	-	-	100	0.007	0.007	0.007
1.002	-	-	100	0.010	0.010	0.010
1.003	-	-	100	0.000	0.000	0.000
1.004	-	-	100	0.023	0.023	0.023
1.005	-	-	100	0.023	0.023	0.023
1.006	-	-	100	0.000	0.000	0.000
1.007	-	-	100	0.000	0.000	0.000
3.000	-	-	100	0.025	0.025	0.025
3.001	-	-	100	0.010	0.010	0.010
3.002	-	-	100	0.023	0.023	0.023
3.003	-	-	100	0.009	0.009	0.009
3.004	-	-	100	0.034	0.034	0.034
4.000	-	-	100	0.045	0.045	0.045
3.005	-	-	100	0.000	0.000	0.000
5.000	-	-	100	0.044	0.044	0.044
5.001	-	-	100	0.029	0.029	0.029
6.000	-	-	100	0.027	0.027	0.027
7.000	-	-	100	0.005	0.005	0.005
6.001	-	-	100	0.000	0.000	0.000
8.000	-	-	100	0.018	0.018	0.018
8.001	-	-	100	0.007	0.007	0.007
5.002	-	-	100	0.000	0.000	0.000
1.008	-	-	100	0.085	0.085	0.085
1.009	-	-	100	0.000	0.000	0.000
				Total	Total	Total
				0.448	0.448	0.448

Free Flowing Outfall Details for Storm

Outfall Pipe Number	Outfall Name	C. Level (m)	I. Level (m)	Min I. Level (m)	D,L (mm)	W (mm)
S1.009	S	33.000	30.433	0.000	0	0

Simulation Criteria for Storm

Volumetric Runoff Coeff	0.750	Additional Flow - % of Total Flow	0.000
Areal Reduction Factor	1.000	MADD Factor * 10m³/ha Storage	2.000
Hot Start (mins)	0	Inlet Coeffiecient	0.800
Hot Start Level (mm)	0	Flow per Person per Day (l/per/day)	0.000
Manhole Headloss Coeff (Global)	0.500	Run Time (mins)	60
Foul Sewage per hectare (l/s)	0.000	Output Interval (mins)	1

Number of Input Hydrographs	0	Number of Offline Controls	0
Number of Online Controls	1	Number of Storage Structures	1

©1982-2018 Innovyze

Simulation Criteria for Storm

Number of Time/Area Diagrams 0 Number of Real Time Controls 0

Synthetic Rainfall Details

Rainfall Model	FSR	Profile Type	Summer
Return Period (years)	100	Cv (Summer)	0.750
Region	England and Wales	Cv (Winter)	0.840
M5-60 (mm)	18.000	Storm Duration (mins)	30
Ratio R	0.361		

©1982-2018 Innovyze

Online Controls for Storm

Pump Manhole: Spump, DS/PN: S1.009, Volume (m³): 2.9

Invert Level (m) 30.450

Depth (m)	Flow (l/s)
0.500	23.4000

©1982-2018 Innovyze

Storage Structures for Storm

Cellular Storage Manhole: S tank, DS/PN: S1.008

Invert Level (m) 30.500 Safety Factor 2.0
Infiltration Coefficient Base (m/hr) 0.00000 Porosity 0.95
Infiltration Coefficient Side (m/hr) 0.00000

Depth (m)	Area (m²)	Inf. Area (m²)	Depth (m)	Area (m²)	Inf. Area (m²)
0.000	80.0	0.0	1.601	0.0	0.0
1.600	80.0	0.0			

©1982-2018 Innovyze

1 year Return Period Summary of Critical Results by Maximum Level (Rank 1) for Storm

Simulation Criteria

Areal Reduction Factor 1.000 Additional Flow - % of Total Flow 0.000
Hot Start (mins) 0 MADD Factor * 10m³/ha Storage 2.000
Hot Start Level (mm) 0 Inlet Coeffiecient 0.800
Manhole Headloss Coeff (Global) 0.500 Flow per Person per Day (l/per/day) 0.000
Foul Sewage per hectare (l/s) 0.000

Number of Input Hydrographs 0 Number of Storage Structures 1
Number of Online Controls 1 Number of Time/Area Diagrams 0
Number of Offline Controls 0 Number of Real Time Controls 0

Synthetic Rainfall Details

Rainfall Model FSR Ratio R 0.360
Region England and Wales Cv (Summer) 0.740
M5-60 (mm) 18.000 Cv (Winter) 0.850

Margin for Flood Risk Warning (mm) 300.0
Analysis Timestep 2.5 Second Increment (Extended)
DTS Status OFF
DVD Status ON
Inertia Status ON

Profile(s) Summer and Winter
Duration(s) (mins) 15, 30, 60, 120, 180, 240, 360, 480, 600, 720, 960, 1440
Return Period(s) (years) 1, 30, 100
Climate Change (%) 0, 0, 40

PN	US/MH Name	Storm	Return Period	Climate Change	First (X) Surcharge	First (Y) Flood	First (Z) Overflow	Overflow Act.
S1.000	Sgully	15 Winter	1	+0%	100/15 Summer			
S1.001	S1	15 Winter	1	+0%	100/15 Summer			
S2.000	Sgully	15 Winter	1	+0%				
S2.001	S2a	15 Winter	1	+0%				
S1.002	S2	15 Winter	1	+0%				
S1.003	Schange	15 Winter	1	+0%	100/15 Winter			
S1.004	S4	15 Winter	1	+0%				
S1.005	Sjunction	15 Winter	1	+0%				
S1.006	Sjunction	15 Winter	1	+0%				
S1.007	SJUNCTION	15 Winter	1	+0%				
S3.000	S6	15 Winter	1	+0%	100/15 Summer			
S3.001	S7	15 Winter	1	+0%	30/15 Summer			
S3.002	Sjunction	15 Winter	1	+0%				
S3.003	S7a	15 Winter	1	+0%	30/15 Summer			
S3.004	S8	15 Winter	1	+0%	100/15 Summer			
S4.000	S09A	15 Winter	1	+0%	100/15 Summer			
S3.005	S9	60 Winter	1	+0%	30/15 Summer			
S5.000	S10	15 Winter	1	+0%	100/15 Summer			

©1982-2018 Innovyze

1 year Return Period Summary of Critical Results by Maximum Level (Rank 1) for Storm

PN	US/MH Name	Water Level (m)	Surcharged Depth (m)	Flooded Volume (m³)	Flow / Cap.	Overflow (l/s)	Pipe Flow (l/s)	Status	Level Exceeded
S1.000	Sgully	33.657	-0.073	0.000	0.16		1.0	OK	
S1.001	S1	33.607	-0.059	0.000	0.35		2.2	OK	
S2.000	Sgully	33.619	-0.081	0.000	0.08		0.5	OK	
S2.001	S2a	33.567	-0.070	0.000	0.19		1.2	OK	
S1.002	S2	32.844	-0.116	0.000	0.11		4.4	OK	
S1.003	Schange	32.457	-0.103	0.000	0.21		4.5	OK*	
S1.004	S4	32.167	-0.233	0.000	0.11		6.8	OK	
S1.005	Sjunction	32.120	-0.234	0.000	0.11		9.2	OK*	
S1.006	Sjunction	32.007	-0.237	0.000	0.10		9.2	OK*	
S1.007	SJUNCTION	31.885	-0.223	0.000	0.15		9.1	OK*	
S3.000	S6	31.875	-0.105	0.000	0.19		3.0	OK	
S3.001	S7	31.804	-0.086	0.000	0.37		4.0	OK	
S3.002	Sjunction	31.781	-0.087	0.000	0.36		6.4	OK*	
S3.003	S7a	31.667	-0.077	0.000	0.47		7.4	OK	
S3.004	S8	31.519	-0.134	0.000	0.34		10.9	OK	
S4.000	S09A	32.198	-0.092	0.000	0.31		5.5	OK	
S3.005	S9	30.755	-0.105	0.000	0.19		9.4	OK	
S5.000	S10	31.935	-0.095	0.000	0.29		5.3	OK	

©1982-2018 Innovyze

1 year Return Period Summary of Critical Results by Maximum Level (Rank 1) for Storm

PN	US/MH Name	Storm	Return Period	Climate Change	First (X) Surcharge	First (Y) Flood	First (Z) Overflow	Overflow Act.	Water Level (m)
S5.001	S12	15 Winter	1	+0%	30/15 Summer				31.757
S6.000	Srwp	15 Winter	1	+0%	100/15 Summer				32.277
S7.000	Srwp	15 Winter	1	+0%					32.312
S6.001	S13a	15 Winter	1	+0%					32.155
S8.000	Srwp	15 Winter	1	+0%	30/15 Winter				32.046
S8.001	S13b	15 Winter	1	+0%	100/60 Winter				31.954
S5.002	S13	60 Winter	1	+0%	30/15 Summer				30.757
S1.008	S tank	60 Winter	1	+0%	30/15 Summer				30.754
S1.009	Spump	60 Winter	1	+0%	1/15 Summer				30.748

PN	US/MH Name	Surcharged Depth (m)	Flooded Volume (m³)	Flow / Cap.	Overflow (l/s)	Pipe Flow (l/s)	Status	Level Exceeded
S5.001	S12	-0.074	0.000	0.50		8.3	OK	
S6.000	Srwp	-0.093	0.000	0.30		3.3	OK	
S7.000	Srwp	-0.078	0.000	0.11		0.6	OK	
S6.001	S13a	-0.103	0.000	0.21		3.8	OK	
S8.000	Srwp	-0.054	0.000	0.43		2.2	OK	
S8.001	S13b	-0.109	0.000	0.16		2.9	OK	
S5.002	S13	-0.103	0.000	0.14		8.3	OK	
S1.008	S tank	-0.046	0.000	0.28		14.0	OK	
S1.009	Spump	0.073	0.000	0.54		13.9	SURCHARGED	

©1982-2018 Innovyze

30 year Return Period Summary of Critical Results by Maximum Level (Rank 1) for Storm

Simulation Criteria

Areal Reduction Factor 1.000 Additional Flow - % of Total Flow 0.000
Hot Start (mins) 0 MADD Factor * 10m³/ha Storage 2.000
Hot Start Level (mm) 0 Inlet Coeffiecient 0.800
Manhole Headloss Coeff (Global) 0.500 Flow per Person per Day (l/per/day) 0.000
Foul Sewage per hectare (l/s) 0.000

Number of Input Hydrographs 0 Number of Storage Structures 1
Number of Online Controls 1 Number of Time/Area Diagrams 0
Number of Offline Controls 0 Number of Real Time Controls 0

Synthetic Rainfall Details

Rainfall Model FSR Ratio R 0.360
Region England and Wales Cv (Summer) 0.740
M5-60 (mm) 18.000 Cv (Winter) 0.850

Margin for Flood Risk Warning (mm) 300.0
Analysis Timestep 2.5 Second Increment (Extended)
DTS Status OFF
DVD Status ON
Inertia Status ON

Profile(s) Summer and Winter
Duration(s) (mins) 15, 30, 60, 120, 180, 240, 360, 480, 600, 720, 960, 1440
Return Period(s) (years) 1, 30, 100
Climate Change (%) 0, 0, 40

PN	US/MH Name	Storm	Return Period	Climate Change	First (X) Surcharge	First (Y) Flood	First (Z) Overflow	Overflow Act.
S1.000	Sgully	15 Winter	30	+0%	100/15 Summer			
S1.001	S1	15 Winter	30	+0%	100/15 Summer			
S2.000	Sgully	15 Winter	30	+0%				
S2.001	S2a	15 Winter	30	+0%				
S1.002	S2	15 Winter	30	+0%				
S1.003	Schange	15 Winter	30	+0%	100/15 Winter			
S1.004	S4	15 Winter	30	+0%				
S1.005	Sjunction	15 Winter	30	+0%				
S1.006	Sjunction	15 Winter	30	+0%				
S1.007	SJUNCTION	15 Winter	30	+0%				
S3.000	S6	15 Winter	30	+0%	100/15 Summer			
S3.001	S7	15 Winter	30	+0%	30/15 Summer			
S3.002	Sjunction	15 Winter	30	+0%				
S3.003	S7a	15 Winter	30	+0%	30/15 Summer			
S3.004	S8	15 Winter	30	+0%	100/15 Summer			
S4.000	S09A	15 Winter	30	+0%	100/15 Summer			
S3.005	S9	60 Winter	30	+0%	30/15 Summer			
S5.000	S10	15 Winter	30	+0%	100/15 Summer			

©1982-2018 Innovyze

30 year Return Period Summary of Critical Results by Maximum Level (Rank 1) for Storm

PN	US/MH Name	Water Level (m)	Surcharged Depth (m)	Flooded Volume (m³)	Flow / Cap.	Overflow (l/s)	Pipe Flow (l/s)	Status	Level Exceeded
S1.000	Sgully	33.674	-0.056	0.000	0.40		2.4	OK	
S1.001	S1	33.646	-0.020	0.000	0.98		6.2	OK	
S2.000	Sgully	33.631	-0.069	0.000	0.20		1.2	OK	
S2.001	S2a	33.590	-0.047	0.000	0.54		3.4	OK	
S1.002	S2	32.870	-0.090	0.000	0.33		12.8	OK	
S1.003	Schange	32.495	-0.065	0.000	0.61		12.7	OK*	
S1.004	S4	32.218	-0.182	0.000	0.33		20.0	OK	
S1.005	Sjunction	32.172	-0.181	0.000	0.33		27.0	OK*	
S1.006	Sjunction	32.055	-0.189	0.000	0.29		26.9	OK*	
S1.007	SJUNCTION	31.948	-0.160	0.000	0.44		27.2	OK*	
S3.000	S6	31.935	-0.045	0.000	0.46		7.2	OK	
S3.001	S7	31.911	0.021	0.000	0.93		10.1	SURCHARGED	
S3.002	Sjunction	31.868	0.000	0.000	0.94		16.6	SURCHARGED*	
S3.003	S7a	31.783	0.039	0.000	1.22		19.1	SURCHARGED	
S3.004	S8	31.599	-0.054	0.000	0.91		28.8	OK	
S4.000	S09A	32.240	-0.050	0.000	0.76		13.4	OK	
S3.005	S9	31.227	0.367	0.000	0.46		23.3	SURCHARGED	
S5.000	S10	32.029	-0.001	0.000	0.69		12.8	OK	

©1982-2018 Innovyze

30 year Return Period Summary of Critical Results by Maximum Level (Rank 1) for Storm

PN	US/MH Name	Storm	Return Period	Climate Change	First (X) Surcharge	First (Y) Flood	First (Z) Overflow	Overflow Act.	Water Level (m)
S5.001	S12	15 Winter	30	+0%	30/15 Summer				31.931
S6.000	Srwp	15 Winter	30	+0%	100/15 Summer				32.318
S7.000	Srwp	15 Winter	30	+0%					32.325
S6.001	S13a	15 Winter	30	+0%					32.185
S8.000	Srwp	15 Winter	30	+0%	30/15 Winter				32.101
S8.001	S13b	15 Winter	30	+0%	100/60 Winter				31.983
S5.002	S13	60 Winter	30	+0%	30/15 Summer				31.231
S1.008	S tank	60 Winter	30	+0%	30/15 Summer				31.225
S1.009	Spump	60 Winter	30	+0%	1/15 Summer				31.218

PN	US/MH Name	Surcharged Depth (m)	Flooded Volume (m³)	Flow / Cap.	Overflow (l/s)	Pipe Flow (l/s)	Status	Level Exceeded
S5.001	S12	0.100	0.000	1.27		21.0	SURCHARGED	
S6.000	Srwp	-0.052	0.000	0.74		8.0	OK	
S7.000	Srwp	-0.065	0.000	0.26		1.5	OK	
S6.001	S13a	-0.073	0.000	0.51		9.4	OK	
S8.000	Srwp	0.001	0.000	1.04		5.3	SURCHARGED	
S8.001	S13b	-0.081	0.000	0.42		7.4	OK	
S5.002	S13	0.371	0.000	0.34		20.2	SURCHARGED	
S1.008	S tank	0.425	0.000	0.51		25.3	SURCHARGED	
S1.009	Spump	0.543	0.000	0.91		23.4	SURCHARGED	

©1982-2018 Innovyze

100 year Return Period Summary of Critical Results by Maximum Level (Rank 1) for Storm

Simulation Criteria

Areal Reduction Factor 1.000 Additional Flow - % of Total Flow 0.000
Hot Start (mins) 0 MADD Factor * 10m³/ha Storage 2.000
Hot Start Level (mm) 0 Inlet Coeffiecient 0.800
Manhole Headloss Coeff (Global) 0.500 Flow per Person per Day (l/per/day) 0.000
Foul Sewage per hectare (l/s) 0.000

Number of Input Hydrographs 0 Number of Storage Structures 1
Number of Online Controls 1 Number of Time/Area Diagrams 0
Number of Offline Controls 0 Number of Real Time Controls 0

Synthetic Rainfall Details

Rainfall Model FSR Ratio R 0.360
Region England and Wales Cv (Summer) 0.740
M5-60 (mm) 18.000 Cv (Winter) 0.850

Margin for Flood Risk Warning (mm) 300.0
Analysis Timestep 2.5 Second Increment (Extended)
DTS Status OFF
DVD Status ON
Inertia Status ON

Profile(s) Summer and Winter
Duration(s) (mins) 15, 30, 60, 120, 180, 240, 360, 480, 600, 720, 960, 1440
Return Period(s) (years) 1, 30, 100
Climate Change (%) 0, 0, 40

PN	US/MH Name	Storm	Return Period	Climate Change	First (X) Surcharge	First (Y) Flood	First (Z) Overflow	Overflow Act.
S1.000	Sgully	15 Winter	100	+40%	100/15 Summer			
S1.001	S1	15 Winter	100	+40%	100/15 Summer			
S2.000	Sgully	15 Winter	100	+40%				
S2.001	S2a	15 Winter	100	+40%				
S1.002	S2	15 Winter	100	+40%				
S1.003	Schange	15 Winter	100	+40%	100/15 Winter			
S1.004	S4	15 Winter	100	+40%				
S1.005	Sjunction	15 Winter	100	+40%				
S1.006	Sjunction	15 Winter	100	+40%				
S1.007	SJUNCTION	60 Winter	100	+40%				
S3.000	S6	15 Winter	100	+40%	100/15 Summer			
S3.001	S7	15 Winter	100	+40%	30/15 Summer			
S3.002	Sjunction	180 Winter	100	+40%				
S3.003	S7a	15 Winter	100	+40%	30/15 Summer			
S3.004	S8	60 Winter	100	+40%	100/15 Summer			
S4.000	S09A	15 Winter	100	+40%	100/15 Summer			
S3.005	S9	60 Winter	100	+40%	30/15 Summer			
S5.000	S10	15 Winter	100	+40%	100/15 Summer			

©1982-2018 Innovyze

100 year Return Period Summary of Critical Results by Maximum Level (Rank 1) for Storm

PN	US/MH Name	Water Level (m)	Surcharged Depth (m)	Flooded Volume (m³)	Flow / Cap.	Overflow (l/s)	Pipe Flow (l/s)	Status	Level Exceeded
S1.000	Sgully	33.942	0.212	0.000	0.73		4.3	FLOOD RISK	
S1.001	S1	33.909	0.243	0.000	1.70		10.7	SURCHARGED	
S2.000	Sgully	33.642	-0.058	0.000	0.37		2.2	OK	
S2.001	S2a	33.616	-0.021	0.000	0.98		6.2	OK	
S1.002	S2	32.893	-0.067	0.000	0.58		22.2	OK	
S1.003	Schange	32.573	0.013	0.000	1.05		22.1	SURCHARGED*	
S1.004	S4	32.265	-0.135	0.000	0.56		34.3	OK	
S1.005	Sjunction	32.218	-0.135	0.000	0.57		47.2	OK*	
S1.006	Sjunction	32.097	-0.147	0.000	0.51		47.1	OK*	
S1.007	SJUNCTION	32.085	-0.023	0.000	0.42		25.7	OK*	
S3.000	S6	32.543	0.563	0.000	0.79		12.4	FLOOD RISK	
S3.001	S7	32.485	0.595	0.000	1.56		17.0	SURCHARGED	
S3.002	Sjunction	31.868	0.000	0.000	0.46		8.1	SURCHARGED*	
S3.003	S7a	32.100	0.356	0.000	2.03		31.8	SURCHARGED	
S3.004	S8	32.088	0.435	0.000	0.91		29.1	SURCHARGED	
S4.000	S09A	32.402	0.112	0.000	1.37		24.0	SURCHARGED	
S3.005	S9	32.084	1.224	0.000	0.82		41.1	SURCHARGED	
S5.000	S10	32.744	0.714	0.000	1.21		22.2	FLOOD RISK	

©1982-2018 Innovyze

100 year Return Period Summary of Critical Results by Maximum Level (Rank 1) for Storm

PN	US/MH Name	Storm	Return Period	Climate Change	First (X) Surcharge	First (Y) Flood	First (Z) Overflow	Overflow Act.	Water Level (m)
S5.001	S12	15 Winter	100	+40%	30/15 Summer				32.457
S6.000	Srwp	15 Winter	100	+40%	100/15 Summer				32.401
S7.000	Srwp	15 Winter	100	+40%					32.339
S6.001	S13a	15 Winter	100	+40%					32.224
S8.000	Srwp	15 Winter	100	+40%	30/15 Winter				32.198
S8.001	S13b	60 Winter	100	+40%	100/60 Winter				32.092
S5.002	S13	60 Winter	100	+40%	30/15 Summer				32.087
S1.008	S tank	60 Winter	100	+40%	30/15 Summer				32.082
S1.009	Spump	60 Winter	100	+40%	1/15 Summer				32.077

PN	US/MH Name	Surcharged Depth (m)	Flooded Volume (m³)	Flow / Cap.	Overflow (l/s)	Pipe Flow (l/s)	Status	Level Exceeded
S5.001	S12	0.626	0.000	2.15		35.6	SURCHARGED	
S6.000	Srwp	0.031	0.000	1.34		14.5	SURCHARGED	
S7.000	Srwp	-0.051	0.000	0.47		2.7	OK	
S6.001	S13a	-0.034	0.000	0.92		17.0	OK	
S8.000	Srwp	0.098	0.000	1.90		9.6	SURCHARGED	
S8.001	S13b	0.029	0.000	0.42		7.4	SURCHARGED	
S5.002	S13	1.227	0.000	0.60		36.2	SURCHARGED	
S1.008	S tank	1.282	0.000	0.53		26.2	SURCHARGED	
S1.009	Spump	1.402	0.000	0.91		23.4	SURCHARGED	

©1982-2018 Innovyze