Canham Consulting

Structural Civil Building Engineers

Flood Risk and Drainage Strategy

Project Ref:	**216352**
Site:	**Reliance Street, Manchester - HWRC Development**
Client:	**SUEZ Recycling and Recovery UK Ltd**
Prepared By:	**Matthew Herring MEng CEng MICE**
	Michelle Robinson BSc (Hons) MCIHT MTPS MICE EngTech
Date of Report:	**07 March 2025**

Canham Consulting Ltd | Consultants to the Construction Industry
The Old School, School Lane, Thorpe St Andrew, Norwich, NR7 0EP | 70 Cowcross Street, London, EC1M 6EJ
Registered in England & Wales | Company Registration No 2710417
01603 430650 | mail@canhamconsulting.co.uk | www.canhamconsulting.co.uk

Document Issue Record

The table below provides a record of document issue and revision history:

Revisions					
Rev	**Description**	**Prepared By**	**Checked By**	**Approved By**	**Date**
P1	Draft Issue	MH / MR	AM	MR	08/09/22
P2	Updated based on LLFA comments	MH / MR	AM	MR	16/11/22
P3	Updated to address planning condition	MH	JL	MR	07/03/25

Contents

1 INTRODUCTION 5
2 DEVELOPMENT DESCRIPTION & LOCATION 6
2.1 Type of Development with Location 6
2.2 Vulnerability Classification 6
2.3 Sequential Test 7
3 PLANNING POLICY 8
3.1 National Planning Policy Framework (NPPF) (2019) 8
3.2 Manchester Local Development Framework – Core Strategy (July 2012) 9
3.3 Manchester City, Salford City & Trafford Councils – Level 1 SFRA (March 2010 10
4 SOURCES OF FLOODING 11
4.1 Flooding from Rivers 11
4.2 Flooding from The Sea 11
4.3 Flooding from The Land 11
4.4 Flooding from The Ground 12
4.5 Flooding from Artificial Sources 13
5 CLIMATE CHANGE 14
6 DETAILED DEVELOPMENT PROPOSAL 15
6.1 Introduction 15
6.2 Proposed Surface Water Drainage Strategy 15
6.2.1 SuDS Hierarchy 15
6.2.2 SuDS Selection 15
6.2.3 SuDs Design 17
6.2.4 Brownfield Runoff Rate 20
6.2.5 Greenfield Runoff Rate 20
6.2.6 Attenuation 20
6.2.7 Exceedance Event 21
6.2.8 Surface Water Design Assumptions 21
6.3 Four Pillars 21
6.4 Proposed Foul Water Strategy 22
6.5 Non-Statutory Technical Standards for Sustainable Drainage 22
7 FLOOD RISK MANAGEMENT MEASURES 26
7.1 Level Strategy 26
7.2 SuDS Maintenance 26
8 RESIDUAL RISKS 27
8.1 Lack of Maintenance 27
8.2 Construction Surface Water Run-Off 27
8.3 Exceedance Event 27
9 OFF SITE IMPACTS 28
9.1 Impact of Surface Water Drainage 28
9.2 Impact of Development on Hydrological Morphology 28

10 SUMMARY.....29

Appendices

Appendix A - Proposed Development Plan
Appendix B - Topographic Survey
Appendix C - Impermeable Areas Plan
Appendix D - Utility Survey
Appendix E - Geotechnical Site Investigation
Appendix F - Proposed Surface Water Drainage Layout and Calculations
Appendix G - Exceedance Flow Plan
Appendix H - Maintenance Strategy
Appendix I - Brownfield Runoff Rate
Appendix J - Greenfield Runoff Rate

List of Figures

Figure 1 - Site Location Plan
Figure 2 - Surface Water Flood Map
Figure 3 - Site Zones

List of Tables

Table 1 - Sequential Test
Table 2 - Groundwater Sensitivity Classification
Table 3 - SuDS Component Assessment
Table 4 - Pollution Hazard Indices
Table 5 - Indices Suitability Comparison
Table 6 - Pillars of SuDS Design
Table 7 - Demonstration of Non-Statutory Technical Standards for Sustainable Drainage

1 INTRODUCTION

Canham Consulting Ltd have been commissioned by Suez Recycling & Recovery UK Ltd to produce a Flood Risk Assessment (FRA) and Drainage Strategy in support of a full planning application for the redevelopment of the existing Household Waste Recycling Centre (HWRC). The detailed development consists of a revised internal layout, with expansion to the north and south to allow for easier use for customers and staff. Additionally, a shop will be included for recycled/upcycled products. A plan of the development can be found in Appendix A.

This FRA will provide information on the flood risks associated with the proposed development, identify mitigation measures for the site and enable the development to meet the relevant design criteria to proceed through planning. These objectives will be achieved by ensuring that the proposed development is safe from flooding to an appropriate degree as specified in current planning policy. This FRA will demonstrate how the proposed development proposals will not increase the risk of flooding within the proposed development site or to third parties.

This report follows the guidance set out in National Planning Policy Framework (NPPF), the National Planning Policy Guidance (NPPG), alongside other relevant Local Authority policies and guidance notes from authorities such as the Environment Agency (EA), United Utilities, CIRIA, The SuDS Manual (C753) and Greater Manchester County Councils Guidance on SuDS (Sustainable Drainage Systems) Design.

The following data was collected as part of this FRA:

- Topographic Survey
- United Utilities Sewer Records
- Historical SI/BGS Borehole Records

2 DEVELOPMENT DESCRIPTION & LOCATION

2.1 Type of Development with Location

The proposed development consists of the redevelopment and expansion of the existing HWRC. The site location is indicated below on Figure 1 and is centred on Grid Reference SD880010.

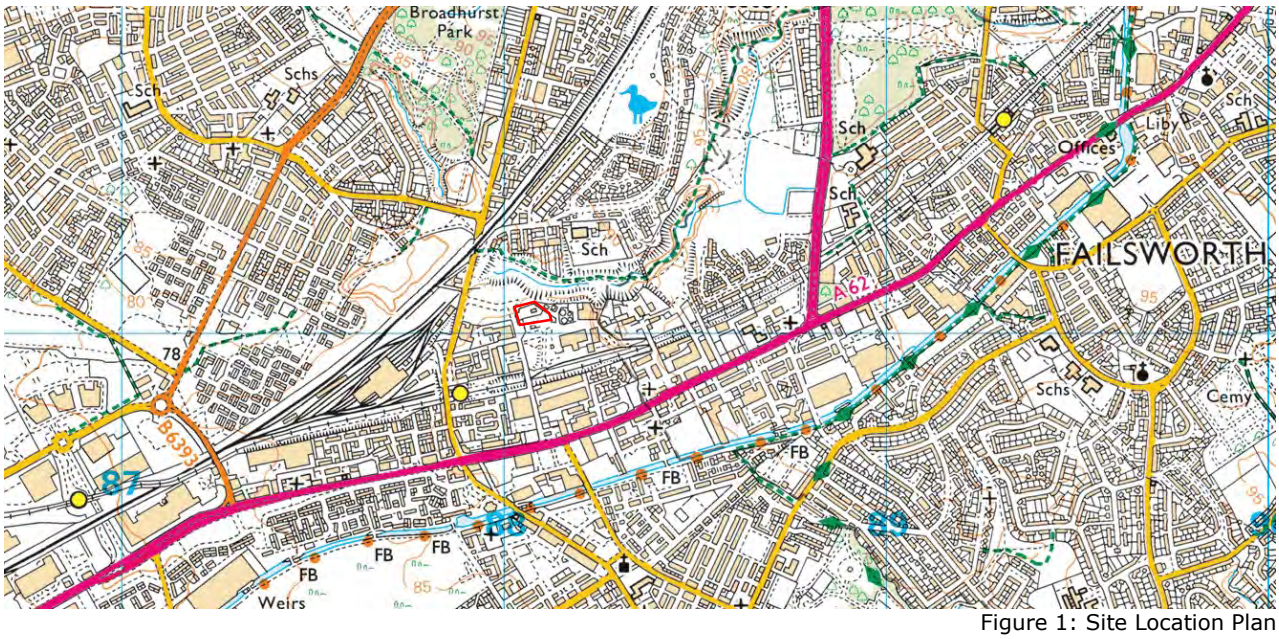

Figure 1: Site Location Plan

The remaining Suez recycling plant area are located immediately from the eastern boundary to the southern boundary. Reliance Street forms the immediate western boundary. To the north is an area of vegetation and Moston Brook, a watercourse.

Beyond the immediate surrounds there are residential dwellings to the north, a dealership specialising in spare car parts to the east, railway line and other industrial/commercial units to the south and residential dwellings/Newton Heath Train depot to the west.

Other than the previously mentioned there are no other notable land uses surrounding the site.

A Topographic Survey of the existing site is included within Appendix B. The topographic survey indicates that the proposed development is in an area with a maximum ground level of approximately 86.29m AOD on the southern boundary of the site and a minimum ground level of approximately 84.59m AOD in the north western corner of the site. The topographic survey shows the general fall of the site is from south to north.

The existing site area is approximately 5,072m², all of which is impermeable. The proposal is to expand the existing site area to the north which is currently greenfield. The proposed area of extension would increase the site size to 5,920m².

2.2 Vulnerability Classification

The categories of built development are classified in national planning policy against flood risk vulnerability. Table 2 within the NPPG provides a list of which categories of development fall into five flood risk vulnerability classifications. The list is recognised as not being exclusive, however, it provides guidance on the various land uses and their associated Flood Risk Vulnerability Classifications.

The proposed development can be categorised as industrial as it is a HWRC which falls into the **'More Vulnerable'** classification.

2.3 Sequential Test

The online long-term flood maps, available on the gov.uk website, indicate that the site is located within Flood Zone 1. Table 3 of the Technical Guidance to the NPPF identifies which categories of development are appropriate for each Flood Zone. This information is summarised below in Table 1.

Flood Risk Vulnerability Classification		Essential Infrastructure	Water Compatible	Highly Vulnerable	More Vulnerable	Less Vulnerable
Flood Zone Classification	Zone 1	✓	✓	✓	✓	✓
	Zone 2	✓	✓	Exception test required	✓	✓
	Zone 3a	Exception test required	✓	×	Exception test required	✓
	Zone 3b	Exception test required	✓	×	×	×

✓ Suitable for Development
× Not Suitable for Development

Table 1: Sequential Test

The proposed development is located within Flood Zone 1 and is categorised as a "More Vulnerable" development. From examining Table 1 above, it is understood that the proposed development is suitable from the Sequential Test viewpoint.

3 PLANNING POLICY

3.1 National Planning Policy Framework (NPPF) (2019)

Chapter 14 of the NPPF states 'The planning system should support the transition to a low carbon future in a changing climate, taking full account of flood risk and coastal change. It should help to: shape places in ways that contribute to radical reductions in greenhouse gas emissions, minimise vulnerability and improve resilience; encourage the reuse of existing resources, including the conversion of existing buildings; and support renewable and low carbon energy and associated infrastructure.'

Within Chapter 14 of the NPPF under the sub heading Planning and Flood Risk are further paragraphs suitable to the proposed development.

- Inappropriate development in areas at risk of flooding should be avoided by directing development away from areas at highest risk (whether existing or future). Where development is necessary in such areas, the development should be made safe for its lifetime without increasing flood risk elsewhere.

- Strategic policies should be informed by a strategic flood risk assessment and should manage flood risk from all sources. They should consider cumulative impacts in, or affecting, local areas susceptible to flooding, and take account of advice from the Environment Agency and other relevant flood risk management authorities, such as lead local flood authorities and internal drainage boards.

- All plans should apply a sequential, risk-based approach to the location of development – taking into account the current and future impacts of climate change – so to avoid, where possible, flood risk to people and property. They should do this, and manage any residual risk by:

  a) applying the sequential test and then, if necessary, the exception test as set out below;
  b) safeguarding land from development that is required, or likely to be required, for current or future flood management;
  c) using opportunities provided by new development to reduce the causes and impacts of flooding (where appropriate through the use of natural flood management techniques); and
  d) where climate change is expected to increase flood risk so that some existing development may not be sustainable in the long-term, seeking opportunities to relocate development, including housing, to more sustainable locations.

- When determining any planning applications, local planning authorities should ensure that flood risk is not increased elsewhere. Where appropriate, applications should be supported by a site-specific flood-risk assessment. Development should only be allowed in areas at risk of flooding where, in the light of this assessment (and the sequential and exception tests, as applicable) it can be demonstrated that:

  a) within the site, the most vulnerable development is located in areas of lowest flood risk, unless there are overriding reasons to prefer a different location;
  b) the development is appropriately flood resistant and resilient;
  c) it incorporates sustainable drainage systems, unless there is clear evidence that this would be inappropriate;
  d) any residual risk can be safely managed; and

e) safe access and escape routes are included where appropriate, as part of an agreed emergency plan.

- Major developments should incorporate sustainable drainage systems unless there is clear evidence that this would be inappropriate. The systems used should:

a) take account of advice from the lead local flood authority;
b) have appropriate proposed minimum operational standards;
c) have maintenance arrangements in place to ensure an acceptable standard of operation for the lifetime of the development; and
d) where possible, provide multifunctional benefits.

3.2 Manchester Local Development Framework – Core Strategy (July 2012)

The Manchester Core Strategy identifies policies for development in the borough from 2012 – 2027, which was adopted in July 2012. Policy EN14 – Flood Risk states:

- In line with the risk-based sequential approach contained within PPS25, development should be directed away from sites at the greatest risk of flooding, and towards sites with little or no risk of flooding; this should take account of all sources of flooding identified in the Manchester-Salford-Trafford Strategic Flood Risk Assessment (SFRA).

- In addition to the requirements for site-specific Flood Risk Assessments (FRAs) set out in PPS25, an appropriate FRA will also be required for all development proposals, including changes of use, on sites greater than 0.5ha within Critical Drainage Areas (CDAs) and Canal Hazard Zones identified in the SFRA.

- All new development should minimise surface water run-off, including through Sustainable Drainage Systems (SUDS) and the appropriate use of Green Infrastructure. Developers should have regard to the surface water run-off rates in the SFRA User Guide. In CDAs, evidence to justify the surface water run-off approach / rates will be required.

- The City of Manchester contains many sections of rivers which are culverted or 'hidden'; where these are indicated in the SFRA beneath the proposed development site, further investigation will be required and the development proposal should take this into account; where feasible and appropriate development should seek to open up culverted/hidden rivers to reduce the associated flood risk and danger of collapse, taking advantage of opportunities to enhance biodiversity and Green Infrastructure.

Policy EN 17 – Water Quality states:

- Development should avoid any adverse impact on water quality, including during the construction phase, and wherever possible should seek to enhance water quality, both chemical and ecological;

- Development should minimise surface water run-off from development and associated roads, and maximise the use of appropriate sustainable drainage systems, to minimise groundwater contamination, and to avoid pollutants reaching watercourses;

- Development close to a watercourse should also ensure that waste or litter cannot enter the watercourse from the site;

- Development should, where feasible and appropriate, seek to open up any culverted or hidden watercourse beneath the site to improve the ecological status of that watercourse.

3.3 Manchester City, Salford City & Trafford Councils – Level 1 SFRA (March 2010

The Level 1 SFRA acknowledges that Moston Brook, immediately north of the site is a main tributary of the River Irk and careful consideration must be taken for increasing flows in either of these. The River Irk is designated as within the upstream catchment of the Grey Irwell and River Irwell are key to controlling the flood risk of Manchester and the surrounding councils.

4 SOURCES OF FLOODING

As the site is shown within Flood Zone 1 on the online flood maps, the most significant risk of flooding is deemed to be surface water. For completeness, an analysis of all flood sources has been undertaken to fully consider the flood risks to the proposed development and the surrounding area.

4.1 Flooding from Rivers

Fluvial flooding is caused by rivers and occurs when the river channel capacity is exceeded by its flow. Most rivers have a natural floodplain which, in built up areas undergoes development.

The online long-term flood risk maps (provided by gov.uk) show the proposed development site is located inside Flood Zone 1 and therefore at a low risk of fluvial flooding.

The closest watercourse to the site is Moston Brook approximately 75m to the north of the site.

Considering the information above, the risk of fluvial flooding posed to the proposed development is understood to be **Low**.

4.2 Flooding from The Sea

Tidal flooding from the sea occurs when high tides and/or storm surges raise the level of tidal waters above the level of the shore or riverbank. This type of flooding can be sudden and severe, although, it is dependent upon several factors. There are two ways in which the sea could potentially flood the site:

a) Open Coast – risk from the sea

The proposed development is 58km inland from the sea. The risk of flooding is therefore understood to be Low.

b) Tidal Influence of Rivers

The watercourses outlined above are not considered to be influenced by the tides at the site location and the risk of flooding from tidal influence is considered to be Low.

4.3 Flooding from The Land

Within urban regions where there are large areas of impermeable surfacing (e.g. roof areas, car parking and roads), high intensity rainfall events can overwhelm manmade drainage systems and lead to flooding. Additionally, in areas with permeable surfaces, flooding can occur if water cannot infiltrate quickly enough to prevent ponding on the surface.

The severity of flooding from the land is dependant, to an extent, on the gradient of the surrounding land. On a macro scale, the OS Explorer series map contours indicate the site is very flat, the land to the north is very steep and falls away from the site.

Therefore, the risk from overland flow is considered to be **Low.**

Figure 2 below illustrates the surface water flood risk at the site and shows the site is at a low risk of surface water flooding for most of its area. Figure 2 is an extract of the long-term flood risk map available on the gov.uk website.

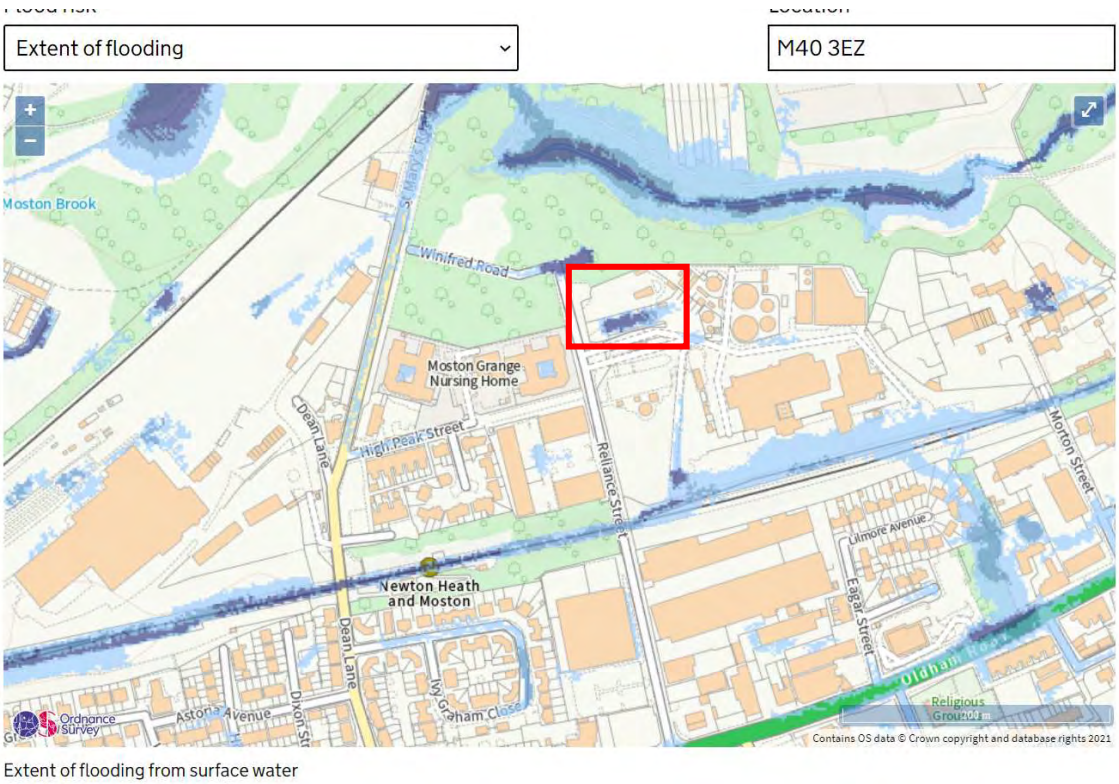

Figure 2: Surface Water Flood Map

There is an area of surface water flooding shown but this area will be amended as part of the development and a positive drainage system will ensure this low point is picked up. Therefore, the risk of flooding from the land is considered to be **Low**.

4.4 Flooding from The Ground

In areas where the level of groundwater is high, rainfall that soaks into the ground can raise groundwater to a level where structures within the ground are at risk of flooding. Structures such as basements or detention ponds can be at risk, although this is dependent upon the ground conditions of the site.

British Geological Survey (BGS) maps indicate that the site has a bedrock of Collyhurst Sandstone Formation over superficial deposits of Till, Devensian - Diamicton. BGS Borehole Records SD80SE406 taken from the additional Suez controlled land indicate that ground water was a minimum of 20m below ground level (bgl). There are numerous other boreholes within the Suez controlled land, none of which have recorded any groundwater strikes.

The environmental sensitivity of the ground conditions at the site location has been examined using the online DEFRA Magic Map service. A summary of this information can be seen in Table 2 below.

Classification	Classification at the site
Nitrate Vulnerable Zone (NVZ)	Yes
Source Protection Zone	None recorded
Aquifer (Bedrock)	Principal
Aquifer (Superficial)	Secondary (Undifferentiated)
Groundwater Vulnerability	Medium - Low

Table 2: Groundwater Sensitivity Classification

Therefore, the flood risk from groundwater is considered to be **low**.

4.5 Flooding from Artificial Sources

Flooding from artificial sources includes flooding from sewers (adopted and private), reservoirs and canals. Sewer flooding occurs when the quantity of water flowing into the sewers exceeds its capacity, sewerage backs up and exits the drainage system via manholes or gullies. Alternatively, and more commonly, sewers flood when a blockage occurs in a pipe causing water to back up. Blockages are more likely in private sewers, but the resulting flood is usually less severe than flooding from public sewers which are often larger than private networks.

Adopted drains; Utility plans are included in Appendix D and show that there are sewers present in Reliance Street. flooding from adopted sewers is considered to be ***Low***.

Private Drainage; There is a large network of private foul and surface water drains at the site but there are no recorded flood events and these are maintained regularly. Anecdotally, there are few concerns, therefore, the risk from private apparatus is considered as ***Low***.

Flooding from Canals; There are no canals in the vicinity of the site and the risk is therefore considered as ***Low***.

Flooding from Reservoirs; There are no reservoirs in the vicinity of the site and the risk is therefore considered as ***Low***.

5 CLIMATE CHANGE

Climate change factors, as defined by NPPF Technical Guidance, should be applied to the peak rainfall intensity. A 50-year lifespan for the development has been considered as the most vulnerable proposed development use is industrial.

National Guidance on Flood Risk Assessments and climate change allowances, shown in Table 2 of the national climate change, shows that in small and urban catchments a central level of 20% and upper end of 40% peak rainfall intensity allowance should be used to assess the range of impacts.

For the purposes of this report it is proposed that a conservative approach is considered and that a climate change factor of +40% is utilised on all drainage calculations.

6 DETAILED DEVELOPMENT PROPOSAL

6.1 Introduction

The proposal is to redevelop the existing HWRC whilst expanding the site both north and south of the existing footprint to provide a more efficient layout to benefit public and operations. The expansion to the south will envelop existing impermeable area, whilst the expansion to the north will encompass existing greenfield land. The site area will increase from 5,072m^2 to 5,920m^2.

The site is currently all impermeable and benefits from a drainage system which takes all surface water from the site down to the Moston Brook, to the north of the site. The route for the drainage from the wider site to Moston Brook goes directly through the existing HWRC.

Our proposals will seek to maintain continuous use of the existing drainage network across the wider site but establish new drainage systems to connect to the existing system draining the full HWRC area in line with current standards and SuDS guidelines.

6.2 Proposed Surface Water Drainage Strategy

6.2.1 SuDS Hierarchy

When deciding what SuDS options are appropriate for a development, it is important to understand how the site will drain. Manchester City Council will expect developers to design drainage systems generally in line with the following surface water drainage hierarchy:

i. Reuse of surface water
ii. Disposal via Infiltration
iii. Disposal to a watercourse
iv. Disposal to a public sewer

A historical site investigation from 2008 included in Appendix E shows large and varied depths of made ground identified across the Suez site, ranging from a depth of 1.5m to 12.0m below ground level.

It is important to consider the environmental sensitivity of the surrounding area. Table 2 above summarises environmental sensitivity information about the site. It is considered that due to the large depths of made ground that infiltration would not be appropriate across the entire site but could be considered in isolated areas of the site.

The existing situation for the entire Suez facility is that surface water is directed towards Moston Brook via various outlets at a reduced rate. There are various forms of attenuation throughout the wider site and there is a surface water isolation valve to ensure that in the case of any potential contaminants being spilt the surface water will not be disposed of to Moston Brook.

6.2.2 SuDS Selection

The lack of ability to develop widespread infiltration and the depth of made ground onsite limits the range of SuDS methods available to the proposed development. Additionally, the existing site area is largely impermeable and used for operational or functional means which suggests that the delivery of many of the methods is not feasible. Given that the site is already in use and covered with concrete hardstanding, we will restrict our flows on site to provide betterment in comparison to the brownfield runoff rate to deliver a positive impact over the existing drainage network.

The suitability of the SuDS detailed within Table 7.1 of the SuDS Manual has been considered for the proposed development. Table 3 below summarises this information.

Component Type	Collection Mechanism	Design Criteria						Suitable	Reason
		Water Quantity			Water Quality	Amenity	Biodiversity		
		Peak Run off	Runoff Volume						
			Small Events	Large Events					
Rainwater Harvesting Systems	P		●	●		●		N	Prohibitively expensive
Green Roofs	S	○	●		●	●	●	N	Lack of new roof area on which to install
Infiltration Systems	P	●	●	●	●	●	●	Y	May be feasible in part in association with rain garden
Proprietary Treatment Systems	P				●			Y	Will be needed prior to discharge
Filter Strips	L		●		●	○	○	N	Lack of available space
Filter Drains	L	●			●	○	○	N	Lack of available space
Swales	L	●	●	●	●	●	●	N	Lack of available space
Bio-retention Systems	P	●	●	●	●	●	●	Y	Potential across areas of site as rain gardens
Trees	P	●	●		●	●	●	Y	Possibly in conjunction with rain garden
Pervious Pavements	S	●	●	●	●	○	○	Y	Potential in resale shop car park
Attenuation Storage Tanks	P	●						Y	Potential to attenuate flows
Detention Basins	P	●	●		●	●	●	N	Lack of available space
Ponds and Wetlands	P	●			●	●	●	N	Lack of available space

Key: P = Point, L=Lateral, S=Surface, ●=Likely Valuable Contribution, ○=Some potential contribution

Table 3: SuDS Component Assessment

Based on the table above, we believe that whilst there are methods which would appear to be feasible, the lack of available space means that they will be difficult to deliver in practice. As such, we have focussed in on the ability to deliver a SuDS compliant scheme embracing the following methods:

- Oil interceptor
- Rain garden
- Permeable paving
- Attenuation storage tank

Alongside this, we will likely look to provide catchpits, silt traps and a penstock; each identified as appropriate to limit potential for pollution to Moston Brook.

6.2.3 SuDs Design

Based on the above detail, we will design our drainage to ensure that surface water is appropriately treated to deliver improvements in the quality and quantity prior to joining the wider site flows ahead of entry to Moston Brook. The site itself contains distinct areas which will each have a different impact on the surface water quality. The site can be divided into areas as outlined in Figure 3 below.

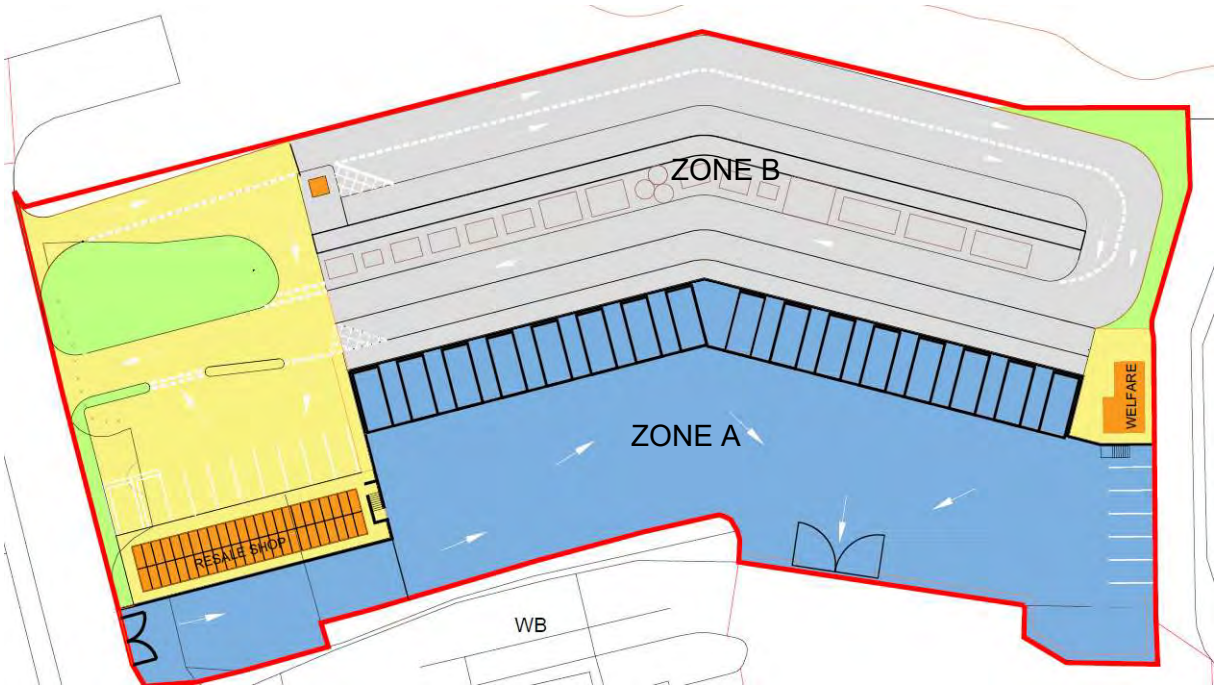

Figure 3: Site Zones

Zone A (highlighted in blue - the entire south side of the site to the south of the split level wall) – The operational areas need to be treated in line with the requirements of the SuDS Manual as Sites with heavy pollution in line with the SuDS Manual Table 26.2. Although not as severe as some of the other sites noted in the item description, as a waste site, it is logical to follow the requirements detailed.

These flows will be treated via a proprietary treatment device; likely a petrol interceptor.

Zone B (highlighted in grey - all non-pedestrianised areas in the upper level aside from landscaped areas) - The majority of the non-operational areas where public and operational activities will take place can be classed as industrial in their nature so in line with Table 26.2 of the SuDS Manual would be treated as Commercial Yard and Delivery Areas. Around the public entrance and exit, the car park and parking areas for the resale shop and around the welfare building would equally be classed in the same way due to the frequency of potential vehicle movement.

These majority of these flows will be treated via the petrol interceptor however there are some exceptions to this. The car park to the resale shop will be permeable paved, this will provide an element of treatment and attenuation ahead of the discharge via the petrol interceptor. The incoming and outgoing public ramps will be drained separately to the wider system due to the levels at the base of the ramp; these will discharge into a rain garden positioned immediately adjacent and infiltrate.

Zone C (highlighted orange - all building roofs) – The resale shop and welfare building roofs will be dealt with as Other roofs (typically commercial/industrial roofs) in line with Table 26.2 of the Sud Manual.

The building roof areas will be discharged differently. The resale shop will discharge into the permeable paved area before being joined with the wider drainage system; so will ultimately discharge to the petrol interceptor. The welfare building will discharge to a rain garden to the immediate north where it will infiltrate.

Zone D (highlighted yellow - pedestrianised areas to east side of site) – This would be classed as similar to an Individual Property Driveway in line with the SuDS Manual Table 26.2 based on the anticipated traffic movements.

As with the welfare building, these flows will discharge to a rain garden to the immediate north where it will infiltrate.

Table 26.1 of the SuDS Manual (C753) indicates that a simple index approach is suitable for assessing the risk to ground water. Table 26.2 indicates the pollution indices associated with different land uses. Table 4 below summarises the pollution indices that are relevant for the proposed development.

Land Use	Pollution Hazard Level	Total Suspended Solids	Metals	Hydro-carbons
Other roofs	Low	0.3	0.2	0.05
Individual property driveways	Low	0.5	0.4	0.4
Commercial yard and delivery areas	Medium	0.7	0.6	0.7
Sites with heavy pollution	High	0.8	0.8	0.9

Table 4: Pollution Hazard Indices

Table 5 below compares the level of treatment offered by the proposed SuDS elements associated with the proposed surface water strategy (outlined above) against the pollution indices shown above in Table 4. Within Table 5 below, we have compared the pollution hazards identified above in Table 4 against the proposed level of treatment offered by the individual elements of the proposed SuDS system based on the total SuDS mitigation index being the sum of mitigation index plus 50% of the subsequent mitigation index to account for reduced performance of additional components with the individual figures having been collectively taken from either Tables 26.3 or 26.4 of The SuDS Manual or manufacturer guidance.

Zone A – Sites with Heavy Pollution	**Total Suspended Solids**	**Metals**	**Hydro-carbons**
	0.8	0.8	0.9
Proprietary Treatment via Petrol interceptor	0.85	0.64	0.99
Suitable Level of Treatment?	Yes	Yes	Yes
Zone B1 – Commercial Yard and Delivery Areas	**Total Suspended Solids**	**Metals**	**Hydro-carbons**
	0.7	0.6	0.7
Petrol interceptor	0.85	0.64	0.99
Suitable Level of Treatment?	Yes	Yes	Yes
Zone B2 – Commercial Yard and Delivery Areas	**Total Suspended Solids**	**Metals**	**Hydro-carbons**
	0.7	0.6	0.7
Permeable Pavement	0.7	0.6	0.7
Petrol interceptor	0.85	0.64	0.99
Total	1.13	0.92	1.2
Suitable Level of Treatment?	Yes	Yes	Yes
Zone B3 – Commercial Yard and Delivery Areas	**Total Suspended Solids**	**Metals**	**Hydro-carbons**
	0.7	0.6	0.7
Bioretention/rain garden	0.8	0.8	0.8
Suitable Level of Treatment?	Yes	Yes	Yes
Zone C1 – Other Roofs	**Total Suspended Solids**	**Metals**	**Hydro-carbons**
	0.3	0.2	0.05
Permeable Pavement	0.7	0.6	0.7
Petrol interceptor	0.85	0.64	0.99
Total	1.13	0.92	1.2
Suitable Level of Treatment?	Yes	Yes	Yes
Zone C2 – Other Roofs	**Total Suspended Solids**	**Metals**	**Hydro-carbons**
	0.3	0.2	0.05
Bioretention/rain garden	0.8	0.8	0.8
Suitable Level of Treatment?	Yes	Yes	Yes
Zone D – Individual Property Driveways	**Total Suspended Solids**	**Metals**	**Hydro-carbons**
	0.5	0.4	0.4
Bioretention/rain garden	0.8	0.8	0.8
Suitable Level of Treatment?	Yes	Yes	Yes

Table 5: Indices Suitability Comparison

The information presented above show the various forms of SuDS which may be incorporated in the development and effectively treat the surface water quality prior to connection to the existing site wide drainage system and discharging to Moston Brook.

In general, we're able to demonstrate how the mitigation will fulfil the requirement; this is the case in all scenarios aside from the operational yard where we are unable to demonstrate sufficient treatment of metals. Although not strictly in accordance with the SuDS Manual requirements, it does deal with the primary concerns with regard to the solids and potential hydrocarbons with metals not really being a risk for the site. With respect to metals, whilst a waste site, it is a reasonably clean site and could more be considered as akin to a Commercial Yard with Delivery Areas; the interceptor would have sufficient mitigation indices to deal with this and as such, we consider the interceptor as being suitable for the required application.

The precise treatment and SuDS components will form part of the detailed drainage design but are included in the present design calculations and drawings included in Appendix F.

In addition to the measures being taken to ensure quality of surface water leaving the HWRC site, a penstock will be provided prior to the connection to the wider site drainage. This will be a safeguard against polluted surface water flows entering the watercourse and can be deployed in emergency situations to limit the impact of an accidental occurrence causing damage downstream.

6.2.4 Brownfield Runoff Rate

The existing site on which the development is taking place is a brownfield site, as such, in line with standard guidance, we need to consider the improvement we are able to make through our development proposals against the present brownfield run-off rate.

The existing brownfield run-off has been calculated and this calculation can be found in Appendix I; peak run-off rates summarised as below.

- Q1 – 43.22 l/s
- Q30 – 105.73 l/s
- Q100 – 136.51 l/s

6.2.5 Greenfield Runoff Rate

Alongside consideration of the Brownfield Run-off Rate, we have calculated the Greenfield Run-off Rate. The proposed design means developing existing brownfield areas and as such, the greenfield runoff would be difficult to achieve in the available space given the nature of the development however, these rates have been calculated and the calculations can be found in Appendix J; summarised as below.

- Q1 – 3.75 l/s/hectare
- Q30 – 10.58 l/s/hectare
- Q100 – 15.43 l/s/hectare

Our intention is to discharge to the existing private network at a rate of 21.6l/s; delivering 50% betterment compared to the current 1 in 1 year brownfield runoff event.

6.2.6 Attenuation

Attenuation on site will be provided through two primary means.

The permeable surfacing area around the resale shop car park will deliver attenuation of flows in this area and demonstrate clear filtration of flows ahead of discharge into the wider system. The nature of the permeable surface will be determined during detailed design but the principles of permeable paving will apply based on utilising the sub-base to deliver the filtration and attenuation storage.

Beneath the operational area, we will be providing an underground storage tank to deliver attenuation of the surface water flows. The tank will be sized to ensure we deliver the required flowrate whilst mitigating flooding for the required storm durations. The tank will be suitably designed to ensure it can be positioned in the area subject to heavy vehicular loadings.

6.2.7 Exceedance Event

Should a storm greater than the critical design event (1 in 100 year plus climate change) occur, the site will likely flood. This possibility has been considered, and an exceedance flow plan has been produced for the proposed development indicating surface water overland flow routes which ensures that surface water flows remain on either the HWRC or the wider Reliance Street site.

6.2.8 Surface Water Design Assumptions

As noted above, the preferred method for discharge of the surface water is a combination of infiltration alongside the connection to the existing surface water network on site which then discharges to Moston Brook. On that basis, to enable a design solution, we have established the following design assumptions:

- Traditional gullies and linear drains taking roof and hardstanding drainage to below ground surface water drainage network or via permeable paving/overland flow to the appropriate point.
- Silt traps and catchpits to be provided as part of the drainage system to ensure effective removal of silts and fine particles from the flows to prevent potential build up within downstream elements.
- Utilisation of existing site wide drainage elements based on it being in a suitable condition
- Discharge via means as outlined in Table 5.
- Design storm of 1 in 100 plus 40% climate change allowance.
- Discharge at a maximum 21.6l/s delivering 50% betterment over the brownfield rate.
- Factor of safety in accordance with Table 25.2 of SuDS Manual 2015 taken as 1.5 based on site area and consequences of failure (no damage or inconvenience)
- All existing soft landscaped areas on site will continue to infiltrate as they presently do and will result in no impact or contribution to the surface water flows.

6.3 Four Pillars

The updates to the SuDS Manual address the four pillars of SuDS design as follows:

1. Water Quantity - Control the quantity of run off
2. Water Quality - Manage the quality of the runoff
3. Amenity – Create and sustain better places for people
4. Biodiversity – Create and sustain better places for nature

We can demonstrate how we have addressed the four pillars of SuDS design across our drainage strategy as outlined below:

Pillar	Demonstration of Pillar
Water Quantity - Control the quantity of run off	The solution seeks to restrict flows to provide 50% betterment against the brownfield runoff rate. The system will be designed to deal with a 1 in 100 year event plus climate change and has been sized to ensure there is no flooding in this scenario.
Water Quality – Manage the quality of the runoff	The solutions have been demonstrated to address the pollution mitigation indices as outlined within the SuDS Manual accounting for the various sources and methods deployed.
Amenity – Create and sustain better places for people	The HWRC is an amenity which is used by members of the public across Greater Manchester and the new function will deliver a better facility. The drainage design will some good examples of SuDS methodology which will further enhance the site design and provide an example for the development of similar sites elsewhere.
Biodiversity – Create and sustain better places for nature	The rain gardens to the east and west of the facility will be planted to forster a greater degree of biodiversity than is currently present on site. As part of the design, opportunities will be taken to enhance the biodiversity across the wider site.

Table 6: Pillars of SuDS Design

6.4 Proposed Foul Water Strategy

Foul drainage connections are assumed to be required in the following building areas:

- Staff and customer toilets
- Cleaners Store
- Tea Point/Kitchenette

There is an existing foul water drainage system on site. It would be appropriate to collect the foul sewerage in a piped network and discharge at the nearest appropriate point using the existing infrastructure assuming it is suitable for continued use. In this instance, we assume that the foul water would continue to discharge into the existing United Utilities network alongside the wider site drainage. Based on this, we expect the flows to remain consistent and do not believe there will be any requirement to consult with United Utilities to seek permission for our discharge.

6.5 Non-Statutory Technical Standards for Sustainable Drainage

The proposed drainage design can be shown to confirm to the Non-Statutory Technical Standards for Sustainable Drainage as outlined in Table 7 below.

Technical Standards Criteria	Technical Standard Requirement	Design Consideration
Flood Risk Outside the Development	*S1 - Where the drainage system discharges to a surface water body that can accommodate uncontrolled surface water discharges without any impact on flood risk from that surface water body (e.g. the sea or a large estuary) the peak flow control standards and volume control technical standards need not apply.*	The current site is primarily brownfield (as an existing HWRC) with a small area of green field. We will discharge surface water from site delivering 50% betterment on the brownfield rate via an existing sewer to Moston Brook; which will ultimately benefit from the reduction in flowrate.

Peak Flow Control	*S2 - For greenfield developments, the peak runoff rate from the development to any highway drain, sewer or surface water body for the 1 in 1 year rainfall event and the 1 in 100 year rainfall event should never exceed the peak greenfield runoff rate for the same event.* *S3 - For developments which were previously developed, the peak runoff rate from the development to any drain, sewer or surface water body for the 1 in 1 year rainfall event and the 1 in 100 year rainfall event must be as close as reasonably practicable to the greenfield runoff rate from the development for the same rainfall event, but should never exceed the rate of discharge from the development prior to redevelopment for that event.*	S2 and S3 will be covered through our design where we will have reduced the site runoff reducing the flowrate towards greenfield runoff delivering 50% betterment compared to the current 1 in 1 year brownfield rate in all events up to and including the 1 in 100 year event (+ cc).
Volume Control	*S4 - Where reasonably practicable, for greenfield development, the runoff volume from the development to any highway drain, sewer or surface water body in the 1 in 100 year, 6 hour rainfall event should never exceed the greenfield runoff volume for the same event.* *S5 - Where reasonably practicable, for developments which have been previously developed, the runoff volume from the development to any highway drain, sewer or surface water body in the 1 in 100 year, 6 hour rainfall event must be constrained to a value as close as is reasonably practicable to the greenfield runoff volume for the same event, but should never exceed the runoff volume from the development site prior to redevelopment for that event.* *S6 - Where it is not reasonably practicable to constrain the volume of runoff to any drain, sewer or surface water body, the runoff volume must be discharged at a rate that does not adversely affect flood risk.*	We have dealt with S4 and S5 through the design where we will be delivering 50% betterment compared to the present situation (brownfield rate as demonstrated in Section 6.2.4) through our attenuation based scheme; as such, we will not adversely impact on flood risk based on our proposal to discharge to Moston Brook via the existing on site network. We will be discharging flows at a reduced rate and as outlined in our calculations, are able to deal with a 1 in 100 year (+ climate change) event without causing any flooding.
Flood Risk within the Development	*S7 - The drainage system must be designed so that, unless an area is designated to hold and/or convey water as part of the design, flooding does not*	S7-S9 are all dealt with through the drainage design with all flows being managed for events

	occur on any part of the site for a 1 in 30 year rainfall event. *S8 - The drainage system must be designed so that, unless an area is designated to hold and/or convey water as part of the design, flooding does not occur during a 1 in 100 year rainfall event in any part of: a building (including a basement); or in any utility plant susceptible to water (e.g. pumping station or electricity substation) within the development.* *S9 - The design of the site must ensure that, so far as is reasonably practicable, flows resulting from rainfall in excess of a 1 in 100 year rainfall event are managed in exceedance routes that minimise the risks to people and property.*	up to 1 in 100 plus 40% climate change. See Appendix F for surface water drainage calculations. All buildings are positioned on the upper split level and positioned above finished ground level so will not be impacted by potential flooding. Although not likely given that there is no flooding in any event up to 1 in 100 plus 40% climate change, exceedance routes are shown on the drawing in Appendix G.
Structural Integrity	*S10 - Components must be designed to ensure structural integrity of the drainage system and any adjacent structures or infrastructure under anticipated loading conditions over the design life of the development taking into account the requirement for reasonable levels of maintenance.* *S11 - The materials, including products, components, fittings or naturally occurring materials, which are specified by the designer must be of a suitable nature and quality for their intended use.*	S10 and S11 are enabled through our details and specification provided as part of this Drainage Strategy. All structures are specified in line with manufacturer recommendations re loadings.
Designing for Maintenance Considerations	*S12 - Pumping should only be used to facilitate drainage for those parts of the site where it is not reasonably practicable to drain water by gravity.*	The majority of the proposed drainage will function via gravity and as such, S12 will not be applicable to those elements however, there is the requirement for a minor element of pumping towards the end of the overall system. The pump will be installed and maintained fully in line with manufacturer recommendations.
Construction	*S13 - The mode of construction of any communication with an existing sewer or drainage system must be such that the making of the communication would not be prejudicial to the structural*	There will be a connection to existing private on site sewers. Although not adoptable, the connections will be made in line with DCG guidance.

	integrity and functionality of the sewerage or drainage system. *S14 - Damage to the drainage system resulting from associated construction activities must be minimised and must be rectified before the drainage system is considered to be completed.*	The contractor will install and test in line with the requirements of the design and any damaged elements will be repaired ahead of operational use and then subject to regular maintenance throughout its serviceable life.

Table 7: Demonstration of Non-Statutory Technical Standards for Sustainable Drainage

7 FLOOD RISK MANAGEMENT MEASURES

Due to the construction of additional impermeable areas, mitigation measures will be required relating to drainage which tie in with current requirements for SuDS. It is therefore proposed that the following flood risk management measures will be undertaken as part of the proposed scheme.

7.1 Level Strategy

To mitigate the flood risk presented by overland flow, the external ground levels will fall away from building entrances. This will ensure that should the drainage system fail, the flood flow paths flow away from the buildings. The details of the levels strategy will be a function of the detailed design, however, floor levels of buildings should be constructed 150mm above the surrounding ground level.

An exceedance flow plan showing the proposed overland flow routes can be seen in Appendix G.

7.2 SuDS Maintenance

SuDS schemes require more maintenance than traditional drainage piped systems and as such it is imperative that a suitable maintenance regime is established to ensure that the features are maintained and function as required.

The exact maintenance requirements of the SuDS will depend upon the product or SuDS provided as a function of detailed design. A maintenance strategy has been completed for the site outlining the maintenance requirements. This maintenance strategy can be found in Appendix H.

In order for the correct maintenance to take place then all parties need to understand who is responsible for the different elements of the drainage system. The drainage features would need to be identified into the various categories which can be delegated to the correct party to carry out the maintenance required for the system.

The Maintenance Strategy will be further developed alongside Suez and GMCA as the project is progressed. It is standard practice for the main elements of infrastructure to be maintained by a management company acting on behalf of Suez or GMCA although this would never normally be setup prior to achieving planning consent. For the purposes of this Drainage Strategy, the Management and Maintenance Plan has been set up as shown in Appendix H with Suez as the responsible company until a third party is appointed to undertake the maintenance.

Whilst undertaking the maintenance of the SuDS, debris may be generated and it will be the responsibility of the person/group/company to ensure that any construction waste is disposed of as per the relevant legislation where appropriate. Silt traps provided as part of the drainage infrastructure will be emptied on a regular basis to ensure continuity of function. Alongside the SuDS elements, it is recommended that the entire system is maintained regularly in the first year to ensure that all elements of the system are as they should be.

We recognise that the site is intended for use as a HWRC which will mean external material or container storage and the like which has the potential to cause blockage to surface water flows, however material storage will be limited to concrete hardstanding areas and pathways to drainage infrastructure will remain clear to ensure the passage of flows and to ensure the drainage isn't impacted or the efficacy reduced in any way. The responsibility for the continuous operation along these lines will fall on the operator and is included in the Management and Maintenance Plan.

8 RESIDUAL RISKS

The residual risks to the development are considered as:

8.1 Lack of Maintenance

As mentioned above, SuDS drainage systems are more likely to fail due to lack of maintenance than traditional piped networks. In order to minimise this risk, it is proposed that an external contractor is appointed on site opening to maintain the drainage infrastructure from day one, and also that the contractor provides a toolbox talk on the operation of the drainage infrastructure at handover.

The proposed levels regime means that should the SuDS fail through lack of maintenance, then the areas which will flood will be non-critical areas.

8.2 Construction Surface Water Run-Off

During construction, the SuDS will not be installed and therefore the contractor should account for exceedance events and contaminated surface water run off. This is necessary to suitably manage surface water onsite during construction and to prevent construction related pollution entering the ground, Reliance Street or neighbouring sites.

As the approach can differ and contractors have different preferred methods, it is proposed that this item is covered by a suitable worded condition to ensure that these risks are appropriately considered prior to commencement of construction.

8.3 Exceedance Event

Should a rainfall event greater than the 1-in-100-year, plus climate change event occur, then surface water flooding may occur. The levels will be designed to ensure that building thresholds are kept safe from flooding. Appendix G contains an exceedance flow plan showing overland flow routes which demonstrates that the surface water will be retained on site.

9 OFF SITE IMPACTS

9.1 Impact of Surface Water Drainage

The introduction of a strategy to cope with the 1-in-100-year event, plus climate change, offers an improvement to the existing scenario as we will be delivering 50% betterment compared to the existing brownfield rate. The surface water quality and quantity will be significantly improved and measures have been taken to ensure that the flows will be filtered in line over and above the recommendations of the SuDS Manual and beyond that, should there be any issues with pollution events or similar, the HWRC surface water flows can be contained and prevented from causing issues downstream. . Therefore, the impact of the Surface Water Drainage System is considered to be **positive**.

9.2 Impact of Development on Hydrological Morphology

The proposed surface water drainage system will not impinge on the hydrological morphology of the area and therefore the site is considered as **neutral**.

10 SUMMARY

The proposed development consists of the redevelopment of the existing Household Waste Recycling Centre (HWRC). The detailed development consists of a revised internal layout, with expansion to the north and south to allow for easier use for customers and staff. Additionally, a shop will be included for recycled/upcycled products.

The flood risk for the existing and proposed development is considered to be low across the wide range of sources and based on that, provided the expansion of the HWRC can be established without adding to the flood risk, the proposals are feasible. Taking this forward, the drainage strategy considers how the design can be established on site taking on board the recommendations from the SuDS Manual and ensuring that any changes result in a drainage solution which improve the surface water drainage system delivering quality, quantity, amenity and biodiversity benefits.

Appendix A
Proposed Development Plan

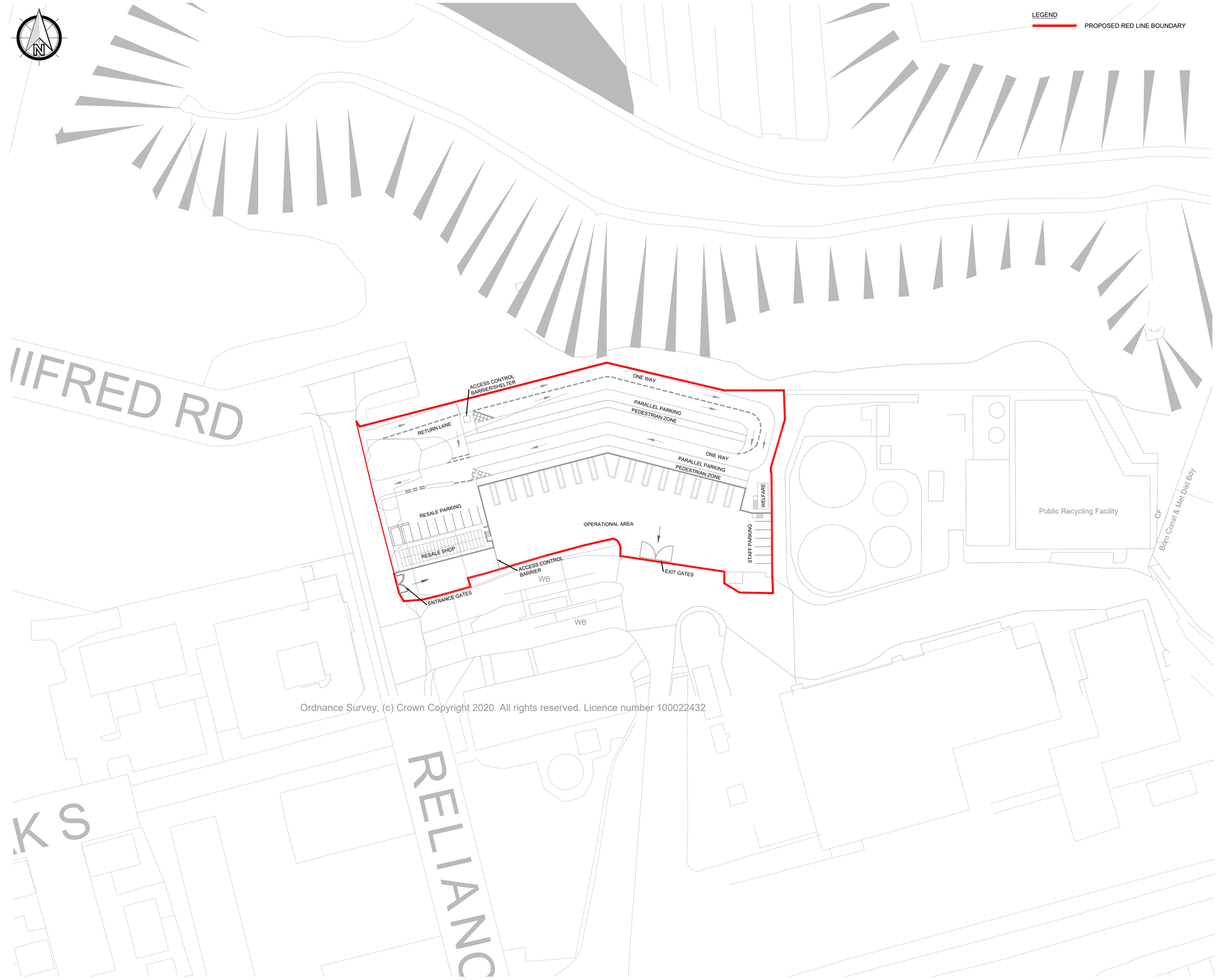

SCALE 1:500m

0m 10m 20m 30m 40m 50m

SCALE BAR FOR INFORMATION ONLY

GENERAL NOTES:

1. THE DRAWINGS, DESIGN AND ALL INFORMATION CONTAINED THEREIN ARE THE SOLE COPYRIGHT OF CANHAM CONSULTING LTD AND ANY REPRODUCTION IS FORBIDDEN UNLESS PERMISSION IS OBTAINED IN WRITING.
2. ALL DRAWINGS SHALL BE READ IN CONJUNCTION WITH ALL RELEVANT CIVIL / STRUCTURAL ENGINEERING DRAWINGS, THE PROJECT SPECIFICATION AND DRAWINGS PRODUCED BY THE ARCHITECTS, SERVICE ENGINEERS AND LANDSCAPE ARCHITECTS.
3. FOR ALL SETTING OUT INFORMATION REFER TO THE ARCHITECT'S DRAWINGS AND DETAILS.
4. ANY DISCREPANCIES BETWEEN THE INFORMATION GIVEN BY THE ENGINEER, AND THAT PROVIDED BY OTHERS, MUST BE REFERRED TO THE ENGINEER BEFORE THE AFFECTED WORKS PROCEED.
5. DIMENSIONS MUST NOT BE SCALED FROM THE ENGINEER'S DRAWINGS.
6. ALL DIMENSIONS ARE IN METRES UNLESS NOTED OTHERWISE.
7. DIMENSIONS MARKED * ARE SUBJECT TO CONFIRMATION BY SITE MEASUREMENT BEFORE CONSTRUCTION PROCEEDS.
8. THE CONTRACTOR IS TO ENSURE THE STABILITY OF EACH ELEMENT AND THE STABILITY OF THE OVERALL CONSTRUCTION UNTIL THE WORKS ARE COMPLETE.
9. ALL DESIGNS, CONNECTIONS, WORKMANSHIP AND MATERIAL ARE TO COMPLY WITH THE CURRENT BUILDING REGULATIONS AND THE LATEST RELEVANT BRITISH STANDARD SPECIFICATION AND CODES OF PRACTICE OR OTHERWISE BE TO THE SPECIFIC WRITTEN APPROVAL OF THE ENGINEER.
10. INSPECTIONS MADE BY THE LOCAL AUTHORITY, SHALL BE ARRANGED BY THE CONTRACTOR TO SUIT THEIR PROGRAMME. ANY COST ARISING OUT OF FAILING TO CARRY OUT THE WORK TO THE SATISFACTION OF THE LOCAL AUTHORITY WILL BE THE SOLE RESPONSIBILITY OF THE CONTRACTOR.
11. THE CONTRACTOR MUST MAKE THEMSELVES AWARE OF THE EXISTING UTILITIES / SERVICES LOCATED WITHIN AND ADJACENT TO THE SITE. **NO EXCAVATIONS ARE TO BE UNDERTAKEN UNTIL THE UTILITY COMPANIES HAVE BEEN INFORMED / CO-ORDINATED WITH**: DIAL-BEFORE-YOU-DIG ADVICE IS FOLLOWED AND THE AREA IS CAT SCANNED. ALL UTILITY COMPANY GUIDELINES AND HEALTH & SAFETY PROCEDURES MUST BE STRICTLY FOLLOWED.

PRELIMINARY DRAWING:
THIS DRAWING IS FOR PRELIMINARY PURPOSES ONLY AND MUST NOT BE READ AS A CONSTRUCTION ISSUE.
IT INDICATES DESIGN INTENT ONLY AND IS SUBJECT TO AMENDMENT DURING FINAL DESIGN DEVELOPMENT.

rev	date	details	drawn	checked
P03	28.07.22	PLANNING ISSUE	GPC	MH
P02	15.07.22	DRAWING SCALE CHANGE TO 1:500m	GPC	MH
P01	25.05.22	PRELIMINARY ISSUE	GPC	MH

Canham Consulting

Structural Engineers | Civil Engineers | Building Surveyors

+44 (0)1603 430650 | mail@canhamconsulting.co.uk | www.canhamconsulting.co.uk

client
SUEZ RECYCLING & RECOVERY UK Ltd

architect

project
RELIANCE STREET, MANCHESTER
HWRC DEVELOPMENT

title
PROPOSED SITE PLAN

CCL ref:	drawn	design	checked	scale	size	date
216352	GPC	MH	MH	1:500	A1 (L)	25.05.2022

status:
S3 - SUITABLE FOR REVIEW & COMMENT

drawing number: 216352-CCL-XX-00-DR-C-4002
revision: P03

© This drawing is copyright and is not to be reproduced without the written permission of Canham Consulting Ltd

THIS DESIGN IS PRODUCED IN ACCORDANCE WITH THE CONSTRUCTION (DESIGN AND MANAGEMENT) REGULATIONS 2015 INCORPORATING THE APPROVED CODE OF PRACTICE. REGULATIONS 2, 3 AND 11 - THOSE ALTERING THE DESIGN WITHOUT THE AUTHORITY OF CANHAM CONSULTING LTD SHOULD BE AWARE THEY ARE ALSO ASSUME RESPONSIBILITY FOR THOSE DUTIES.

Appendix B
Topographic Survey

© CMS SURVEYS Ltd. 2021
Reproduction in whole or in part by any means is prohibited without the prior permission of CMS SURVEYS Ltd.
T. 07426632211 · W. www.cmssurveys.co.uk

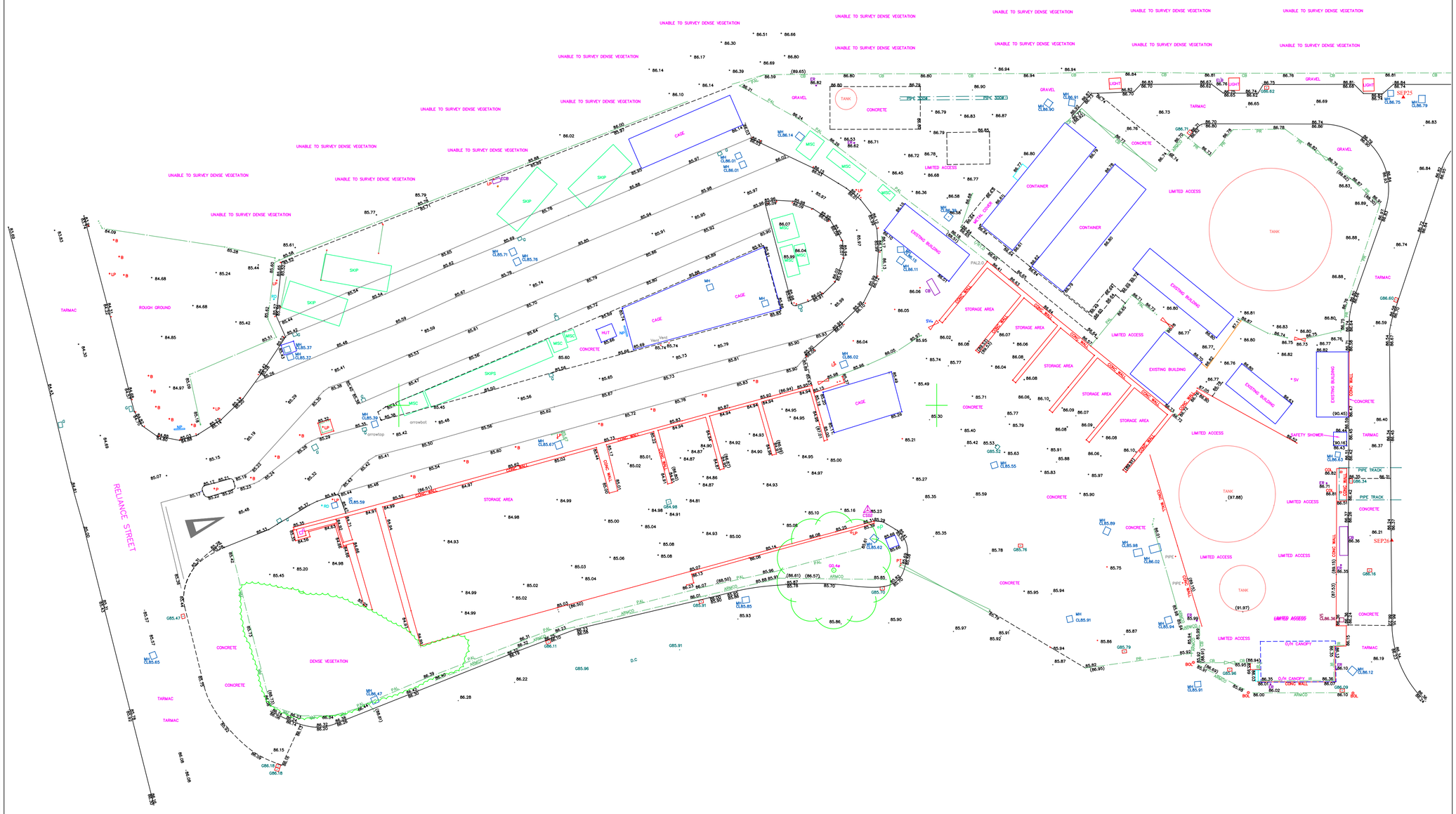

N

PLAN GRID NORTH

File Name: Reliance Street_Topo HWRC.dwg

LEGEND

AV	AIR VALVE	LBY	LIFEBUOY
BB	BELISHA BEACON	MH	MANHOLE
BOL	BOLLARD	MKR	MARKER
BH	BORE HOLE	MS	MILE STONE
BM	BMM	MP	MOORING POINT
BM	BENCH MARK	MW	MONITORING WELL
BS	BUS STOP	NP	NAME PLATE
BT	BT INSPECTION COVER	OP	OUTFALL PIPE
CB	CONTROL BOX	PB	POST OFFICE BOX
CCTV	CCTV CAMERA POST	PN	PYLON
COL	COLUMN	PP	PETROL PUMP
CTV	CABLE TELEVISIONS COVER	PS	POST
CV	CONTROL CV COVER	RE	RODDING EYE
DC	DRAINAGE CHANNEL	RL	RIDGE LEVEL
DP	DOWN PIPE	RS	ROAD SIGN
DR	DRAIN	RTW	RETAINING WALL
EIC	ELEC INSPECTION COVER	RWP	RAINWATER PIPE
EL	EAVES LEVEL	SAP	SAPLING
ELB	ELECTRIC BOX	SP	SIGN POST
ER	ELECTRIC RISER	SPF	SPOT FALL LEVEL
EP	ELECTRICITY POLE	SV	STOP VALVE
FFL	FINISHED FLOOR LEVEL	TB	TRAFFIC BOLLARD
FH	FIRE HYDRANT	TCB	TELEPHONE CALL BOX
FP	FLAG POLE	TIE	TIE WIRE
G	GULLY	TL	TRAFFIC LIGHT
GLT	GROUND LIGHT	TLB	TRAFFIC LIGHT BOX
GP	GATE POST	TM	TICKET MACHINE
GST	GAS TAP	TP	TELEGRAPH POLE
GV	GAS VALVE	VP	VENT PIPE
IC	INSPECTION COVER	WM	WATER METER
IL	INVERT LEVEL	WO	WASH OUT
KO	KERB OUTLET	WST	WATER STOP TAP
LAD	LADDER	WSV	WATER STOP VALVE
LD	LAND DRAIN	CO.6#	TREE GIRTH (Dia.)
LP	LAMP POST	MG	TREE MULTI-GIRTH
PAL	PALISADE		DRIP LINE
W/M	WIRE MESH		WATER COURSE
B/W	BARBED WIRE		KERB
C/P	CONC PANEL		FENCE
P/W	POST AND WIRE		SURFACE CHANGE
P/R	POST AND RAIL		WALL
I/R	IRON RAIL		TOP / BANK
C/B	CLOSE BOARDED		BOTTOM BANK
CAV	CAVITY WALL		BUILDING
(38.99)	TOP OF TEXTURE		BUILDING CANOPY
	GATE		OVER HEAD ELECTRICAL
	STATION		OVER HEAD TELECOM
	BOREHOLE		
	BATTER		HEDGE

NOTES:

All levels relate to O.S (Newlyn) Datum. Established using network RTK. Survey plotted on a plane local grid, orientated to National Grid.

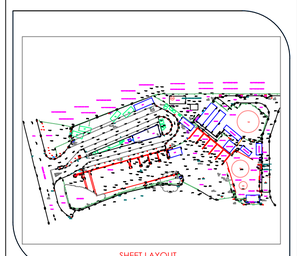

SHEET LAYOUT

0 2m 4m 8m 12m 16m

SCALE BAR

REV	DATE	DESCRIPTION

CMS SURVEYS
www.cmssurveys.co.uk

Client
Greater Manchester Combined Authority
Tootal
56 Oxford Street
Manchester
M1 6EU

Project Title
Topographical Survey of Land at:
Reliance Street HWRC
Reliance Street
Manchester

Surveyed	Drawn	Checked
G.Gilbert	D.Shipton	C.Scouler

Scale	Date	Drawing Ref.	No.	Size	Rev
1:200	Jun 21	EN21107	1	A1	0

Appendix C
Impermeable Areas Plan

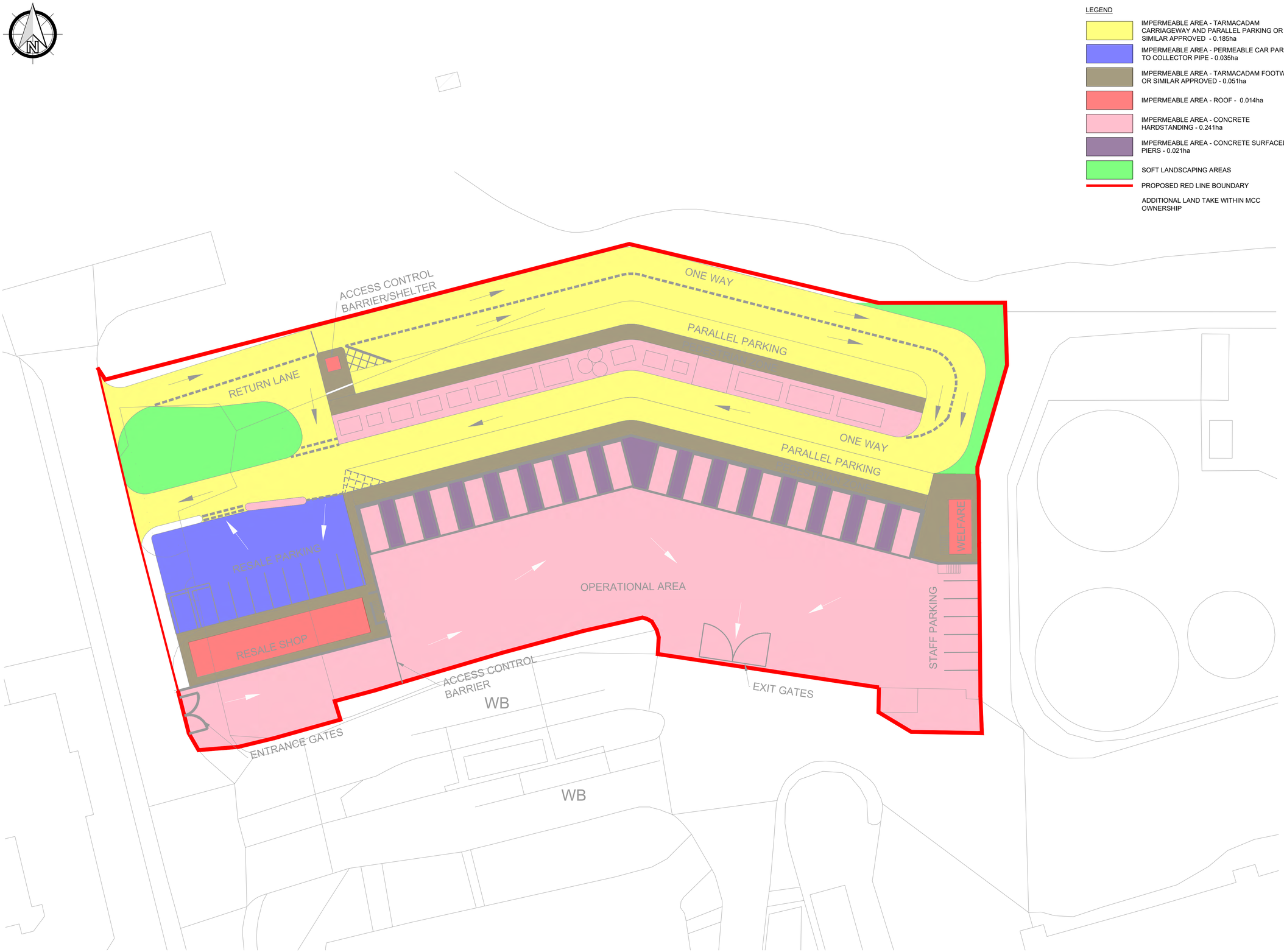

dnance Survey, (c) Crown Copyright 2020. All rights reserved. Licence number 100022432

SCALE 1:250m
0m 5m 10m 15m 20m 25m
SCALE BAR FOR INFORMATION ONLY

LEGEND

- IMPERMEABLE AREA - TARMACADAM CARRIAGEWAY AND PARALLEL PARKING OR SIMILAR APPROVED - 0.185ha
- IMPERMEABLE AREA - PERMEABLE CAR PARK TO COLLECTOR PIPE - 0.035ha
- IMPERMEABLE AREA - TARMACADAM FOOTWAYS OR SIMILAR APPROVED - 0.051ha
- IMPERMEABLE AREA - ROOF - 0.014ha
- IMPERMEABLE AREA - CONCRETE HARDSTANDING - 0.241ha
- IMPERMEABLE AREA - CONCRETE SURFACED PIERS - 0.021ha
- SOFT LANDSCAPING AREAS
- PROPOSED RED LINE BOUNDARY
- ADDITIONAL LAND TAKE WITHIN MCC OWNERSHIP

GENERAL NOTES:

1. THE DRAWINGS, DESIGN AND ALL INFORMATION CONTAINED THEREIN ARE THE SOLE COPYRIGHT OF CANHAM CONSULTING LTD AND ANY REPRODUCTION IS FORBIDDEN UNLESS PERMISSION IS OBTAINED IN WRITING.
2. ALL DRAWINGS SHALL BE READ IN CONJUNCTION WITH ALL RELEVANT CIVIL / STRUCTURAL ENGINEERING DRAWINGS, THE PROJECT SPECIFICATION AND DRAWINGS PRODUCED BY THE ARCHITECTS, SERVICE ENGINEERS AND LANDSCAPE ARCHITECTS.
3. FOR ALL SETTING OUT INFORMATION REFER TO THE ARCHITECT'S DRAWINGS AND DETAILS.
4. ANY DISCREPANCIES BETWEEN THE INFORMATION GIVEN BY THE ENGINEER, AND THAT PROVIDED BY OTHERS, MUST BE REFERRED TO THE ENGINEER BEFORE THE AFFECTED WORKS PROCEED.
5. DIMENSIONS MUST NOT BE SCALED FROM THE ENGINEER'S DRAWINGS.
6. ALL DIMENSIONS ARE IN METRES UNLESS NOTED OTHERWISE.
7. DIMENSIONS MARKED * ARE SUBJECT TO CONFIRMATION BY SITE MEASUREMENT BEFORE CONSTRUCTION PROCEEDS.
8. THE CONTRACTOR IS TO ENSURE THE STABILITY OF EACH ELEMENT AND THE STABILITY OF THE OVERALL CONSTRUCTION UNTIL THE WORKS ARE COMPLETE.
9. ALL DESIGNS, CONNECTIONS, WORKMANSHIP AND MATERIAL ARE TO COMPLY WITH THE CURRENT BUILDING REGULATIONS AND THE LATEST RELEVANT BRITISH STANDARD SPECIFICATION AND CODES OF PRACTICE OR OTHERWISE BE TO THE SPECIFIC WRITTEN APPROVAL OF THE ENGINEER.
10. INSPECTIONS MADE BY THE LOCAL AUTHORITY, SHALL BE ARRANGED BY THE CONTRACTOR TO SUIT THEIR PROGRAMME. ANY COST ARISING OUT OF FAILING TO CARRY OUT THE WORK TO THE SATISFACTION OF THE LOCAL AUTHORITY WILL BE THE SOLE RESPONSIBILITY OF THE CONTRACTOR.
11. THE CONTRACTOR MUST MAKE THEMSELVES AWARE OF THE EXISTING UTILITIES / SERVICES LOCATED WITHIN AND ADJACENT TO THE SITE. **NO EXCAVATIONS ARE TO BE UNDERTAKEN UNTIL THE UTILITY COMPANIES HAVE BEEN INFORMED / CO-ORDINATED WITH**: DIAL-BEFORE-YOU-DIG ADVICE IS FOLLOWED AND THE AREA IS CAT SCANNED. ALL UTILITY COMPANY GUIDELINES AND HEALTH & SAFETY PROCEDURES MUST BE STRICTLY FOLLOWED.

PRELIMINARY DRAWING:
THIS DRAWING IS FOR PRELIMINARY PURPOSES ONLY AND MUST NOT BE READ AS A CONSTRUCTION ISSUE.
IT INDICATES DESIGN INTENT ONLY AND IS SUBJECT TO AMENDMENT DURING FINAL DESIGN DEVELOPMENT.

rev	date	details	drawn	checked
P01	25.05.22	PRELIMINARY ISSUE	GPC	MH

Canham Consulting

Structural Engineers | Civil Engineers | Building Surveyors

+44 (0)1603 430650 | mail@canhamconsulting.co.uk | www.canhamconsulting.co.uk

client
SUEZ RECYCLING & RECOVERY UK Ltd

architect

project
RELIANCE STREET, MANCHESTER
HWRC DEVELOPMENT

title
PRIVATE DRAINAGE:
IMPERMEABLE ARAS PLAN

CCL ref:	drawn	design	checked	scale	size	date
216352	GPC	MH	MH	1:250	A1 (L)	25.05.2022

status:
S3 - SUITABLE FOR REVIEW & COMMENT

drawing number: 216352-CCL-XX-00-DR-C-3002
revision: P01

© This drawing is copyright and is not to be reproduced without the written permission of Canham Consulting Ltd

THIS DESIGN IS PRODUCED IN ACCORDANCE WITH THE CONSTRUCTION (DESIGN AND MANAGEMENT) REGULATIONS 2015 INCORPORATING THE APPROVED CODE OF PRACTICE. REGULATIONS 2.9 AND 3.1. THOSE ALTERING THE DESIGN WITHOUT THE AUTHORITY OF CANHAM CONSULTING LTD SHOULD BE AWARE THEY MAY ALSO ASSUME RESPONSIBILITY FOR THOSE DUTIES.

Appendix D
Utility Survey

DRAWING NUMBER GMWDA-SW-G-1002

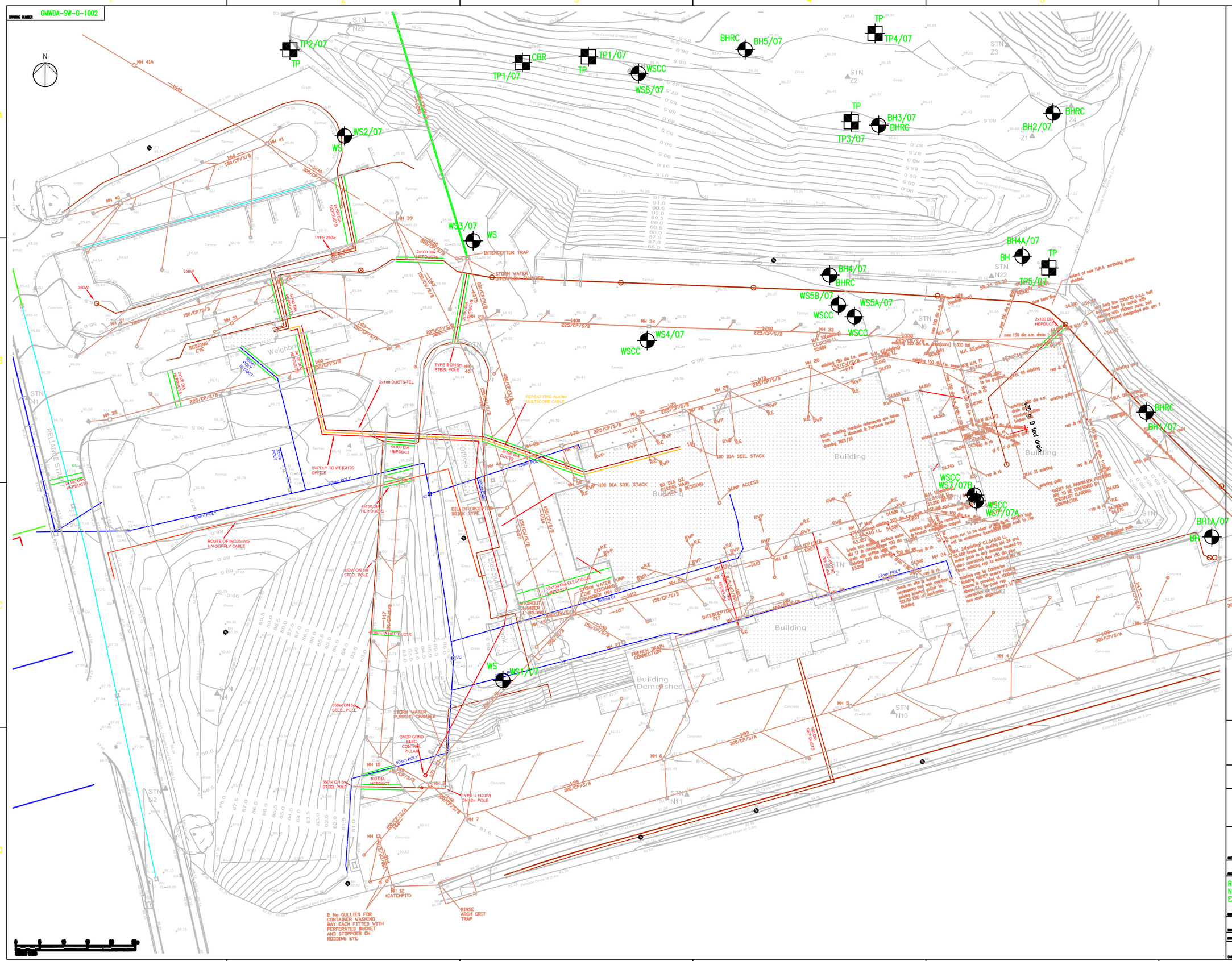

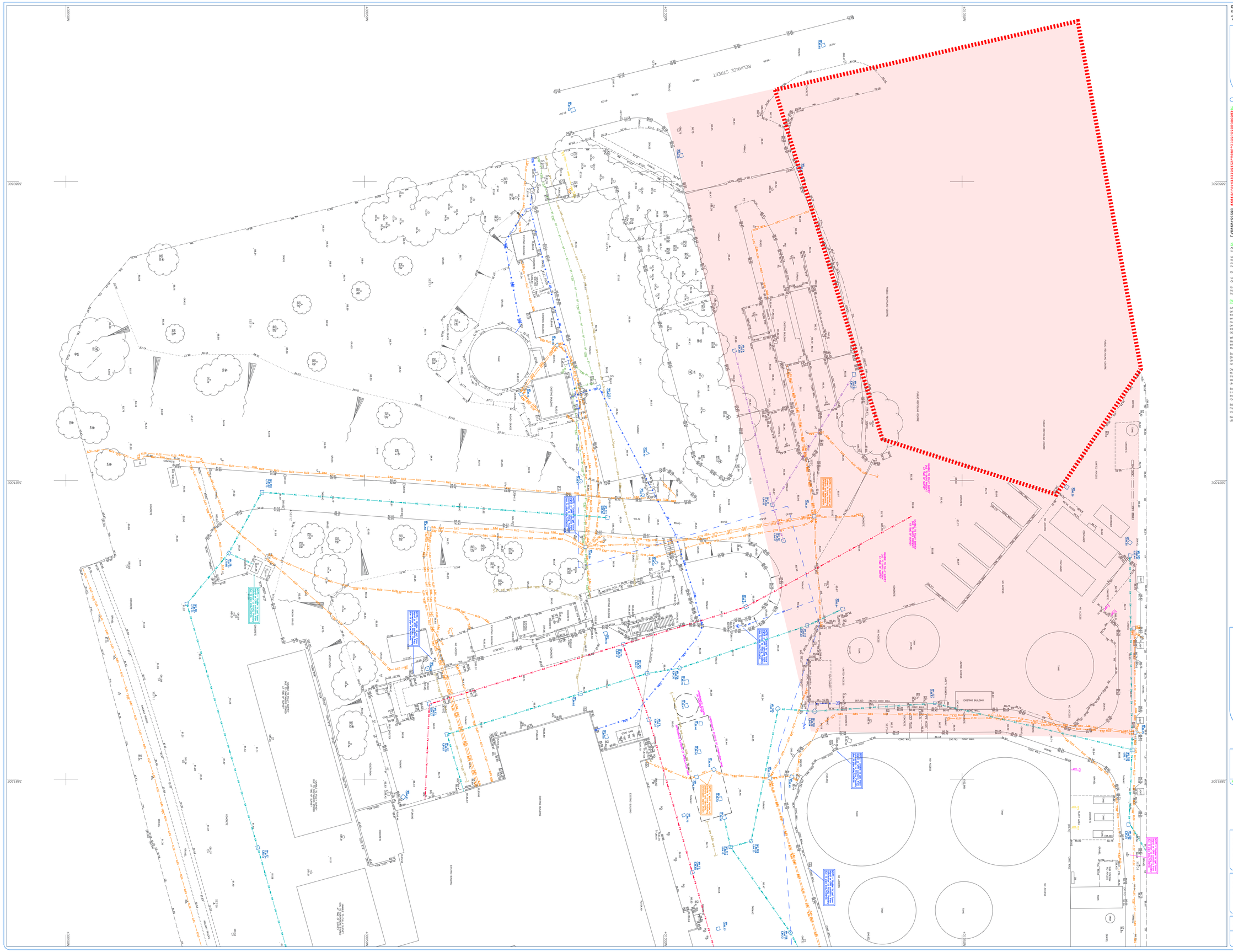
RELIANCE STREET
PUBLIC RIGHT OF WAY
EXISTING BUILDING
CONC WALL
TANK
SAFETY FENCE
CONCRETE
GRASS
TARMAC
CONC BLOCK
CONC PATH
CONC SLAB
CONC PAD
CONC KERB
CONC ROAD
CONC BASE
CONC ROOF
CONC FLOOR
CONC STEPS
CONC RAMP
CONC WALL
CONC BOLLARD
CONC PLANTER
CONC SIGN
CONC LIGHT
CONC POST
CONC BRIDGE
CONC CHANNEL
CONC PIPE
CONC BOX
CONC CHAMBER

Appendix E
Ground investigation

Reliance Street, Newton Heath

For
Costain Limited

D115213/GEO/1168

FINAL

Interpretative Geo-Environmental Report on Ground Investigation: Baseline Condition Assessment

April 2008

Scott Wilson Ltd

Reliance Street, Newton Heath

Interpretative Geo-Environmental Report on Ground Investigation: Baseline Condition Assessment

April 2008

Prepared by: Neomie Abeyawickrama BSc (Hons) MSc DIC GradCIWEM
Environmental Scientist

Reviewed by: Steve Handsley MSc Cgeol
Technical Director

Reviewed by: Danny Hope BSc (Hons) MSc
Principal Geo-Environmental Specialist

Approved by: David Cragg BSc MSc CEng CGeol SILC
Associate Geo-Environmental Specialist

Scott Wilson Ltd
St James's Buildings
Oxford Street
Manchester
M1 6EF

Phone: +44 (0)161 236 8655
Fax: +44 (0)161 228 2581
www.scottwilson.com

This document has been prepared in accordance with the scope of Scott Wilson's appointment contract with Costain Limited and is subject to the terms of that appointment a copy of which (excluding Schedule 2) is appended at the end of the document. Scott Wilson accepts no liability for any use of this document other than as set out in its appointment contract. Any advice, opinions, recommendations or conclusions within this document should be read and relied upon only in the context of the document as a whole. The contents of this document are not to be construed as providing legal, business or tax advice or opinion.

© Scott Wilson Group plc 2008

Reliance Street, Newton Heath

Interpretative Geo-Environmental Report on Ground Investigation: Baseline Condition Assessment

D115213/GEO/1168

April 2008

REVISION SCHEDULE

Rev	Date	Details	Prepared by	Reviewed by	Approved by
Draft	23/10/07	Draft	**Neomie Abeyawickrama** Environmental Scientist	**Danny Hope** Principal Geo-Environmental Specialist	**David Cragg** Associate Geo-Environmental Specialist
Final	21/04/08	Minor amendments	**Neomie Abeyawickrama** Environmental Scientist	**Danny Hope** Principal Geo-Environmental Specialist	**David Cragg** Associate Geo-Environmental Specialist

EXECUTIVE SUMMARY

NOTE: *In measuring baseline conditions in brownfield land it is expected that soil and ground water will contain contaminants which will vary in extent and concentration. The purpose of risk assessment is to establish the significance of contamination which in this case is assessed for the land in its current,* ***baseline condition****.*

The Reliance Street Site, Newton Heath (hereafter known as 'the site') is located in Newton Heath area of Manchester at a National Grid SD880010. The site covers an area of around 3.1 hectares and is currently roughly triangular in shape. The proposed development includes the development of land to the north of the site which is currently soft landscaped with grass and a tree-lined embankment. The final development site will be roughly rectangular in shape.

This report describes the **baseline condition** of the site from all of the available information updating previous risk assessments relating to the site in its current, baseline condition.

The previous ground investigations carried out by both Entec (2006) and Soil Mechanics (2007) have demonstrated similar ground conditions across the site, which generally comprise Made Ground of variable thickness over natural glacial deposits. Bedrock was not encountered during either investigation, however, geological maps indicate the Collyhurst Sandstone is present. Ground water was encountered at variable depth both during the fieldwork and upon monitoring.

Based upon the results obtained for soil analysis, it is considered that metals, metalloid, inorganic and organic determinands pose low to moderate risk to current site users based upon reference to the Soil Guideline Values (SGV) and the Generic Assessment Criteria (GAC) for commercial/industrial land use. This assessment is based upon the isolated hotspot of Aliphatic hydrocarbons C8-C10, hexachlorobutadiene and benzo(a)pyrene at TP5/07 1.0 m bgl.

Asbestos fibres were not detected in any of the soil samples analysed.

Human health risks to current site users and maintenance workers should not be significant since hardstanding is present on the majority of the site. The use of appropriate health and safety equipment by maintenance workers will minimise direct contact and inhalation of any potential contaminant vapours.

Leachate tests carried out on selected soil samples demonstrated that compared with EQS there were exceedances of ammoniacal nitrogen, sulphate, sulphide, total cyanide and total phenols and PAH levels were above the UKDWS.

There were likewise EQS exceedances of ammoniacal nitrogen, copper, nickel, zinc, petroleum, sulphate, total cyanide and sulphide and UKDWS exceedances of polyaromatic hydrocarbons in the groundwater within the Made Ground and Glacial till. The elevated contaminants are not considered to pose significant risk to the deep aquifer within the Collyhurst Sandstone due to the thickness of Glacial Till above it. The site is not located within a source protection zone and there are no ground water abstraction points within close vicinity of the site.

Therefore, for the purposes of the current condition of the site no further action is considered necessary, however, for planning purposes, it may be prudent to undertake more complex geochemical fate and transport modelling for the potential limited risks to the Moston Brook as well as water monitoring of the river from both upstream and downstream areas.

In terms of ground gases, the site in its current condition is considered to be low sensitivity and the gas regime demonstrated above can be classified CS2, as low risk. Although no remedial measures are necessary for the site in its current condition, basic gas protection measures will be required on any new developments.

There may be a ground gas risk from off-site sources which include a registered landfill site within 250 m of the site and a former refuse site located within 25 m of the site. Although it is considered the migration of gas from off-site sources onto the site is to be a low to negligible risk.

Significantly with relation to mobile contaminants (i.e. ground gas and ground water) it is essential to appreciate that the base line condition of the site may be influenced by off-site

sources which are uninhibited by physical boundaries and may currently, or at some future point influence the baseline contaminant condition at the site.

Overall, on the basis of the information obtained for this assessment, potentially significant risks have not been identified, relating to the baseline condition of the site in its current state.

TABLE OF CONTENTS

PAGE NO.

1. INTRODUCTION 1
1.1 PURPOSE, SCOPE AND OBJECTIVES OF THIS REPORT 1
1.2 DEVELOPMENT PROPOSALS 2
2. ENVIRONMENTAL SETTING 3
2.1 SITE LOCATION AND DESCRIPTION 3
2.2 PUBLISHED GEOLOGY 3
2.3 HYDROGEOLOGY 4
2.4 HYDROLOGY 5
3. HISTORIC LAND USE 6
4. SUMMARY OF ENVIROCHECK REPORT 8
5. PRELIMINARY PHASE 1 RISK ASSESSMENT 10
5.1 OVERVIEW 10
5.2 PRELIMINARY CONCEPTUAL SITE MODEL (CSM) 11
6. REVIEW OF EXISTING INFORMATION 12
6.1 PREVIOUS DESK STUDIES 12
6.2 PREVIOUS GROUND INVESTIGATIONS 12
7. SITE INVESTIGATION WORKS 13
7.1 OBJECTIVES 13
7.2 INVESTIGATION RATIONALE 14
7.3 SUMMARY OF FIELDWORK 15
8. SUMMARY OF SITE INVESTIGATION FINDINGS 17
8.1 GROUND CONDITIONS 17
8.2 GROUNDWATER LEVELS 19
8.3 VISUAL AND OLFACTORY EVIDENCE OF CONTAMINATION 20
8.4 PHOTO-IONISATION DETECTOR SURVEY 21
8.5 CHEMICAL ANALYSIS 22
9. HUMAN HEALTH RISK ASSESSMENT METHODOLOGY 26
9.1 INTRODUCTION 26
9.2 DETERMINATION OF HUMAN HEALTH RISK ASSESSMENT CRITERIA 26
9.3 CONTAMINATION ASSESSMENT 28
10. CONTROLLED WATERS RISK ASSESSMENT 34
10.1 INTRODUCTION 34
10.2 BACKGROUND INFORMATION 34
10.3 GROUND WATER ANALYSIS ASSESSMENT 34
10.4 RISK ASSESSMENT - SOIL LEACHABILITY 37
11. GROUND GAS RISK ASSESSMENT 40
11.1 APPROACH TO ASSESSMENT 40
11.2 GROUND GAS MONITORING RESULTS 40
11.3 CLASSIFICATION OF GAS REGIME 41
11.4 GAS RISK MITIGATION MEASURES 42
12. REVISED RISK ASSESSMENT 44
12.1 INTRODUCTION 44
13. CONCLUSIONS AND RECOMMENDATIONS 53
14. REFERENCES 55

15. LIMITATIONS ON REPORT 57

FIGURES

FIGURE 1 – SITE LOCATION PLAN

FIGURE 2 – GEOLOGICAL MAP EXTRACT

FIGURE 3 – SITE LAYOUT PLAN

FIGURE 4 – EXPLORATORY HOLE LOCATION PLAN

APPENDICES

APPENDIX A – ENTEC REPORTS (2006)

APPENDIX B – SOIL MECHANICS FACTUAL REPORT (2007)

APPENDIX C – ENVIROCHECK REPORT AND HISTORICAL MAPPING

APPENDIX D – COAL AUTHORITY INFORMATION

APPENDIX E – TABLES OF STATISTICAL ANALYSIS FOR SITE SOILS DATA

APPENDIX F – SOILS GUIDELINE VALUES, GENERIC ACCEPTANCE CRITERIA VALUES AND ENVIRONMENTAL QUALITY STANDARDS

APPENDIX G – CIRIA C665 SCREENING VALUE TABLE

APPENDIX H – PROPOSED GENERAL ARRANGEMENT

1. INTRODUCTION

1.1 Purpose, Scope And Objectives Of This Report

Greater Manchester Waste Disposal Authority (GMWDA) are required by statutory bodies to decrease the amount of biodegradable waste going to landfill, and deliver higher recycling and composting rates. Due to this and the increasing rate of landfill tax GMWDA are now faced with elevated financial risks when sending waste materials to landfill.

It is proposed to significantly upgrade GMWDA's existing facilities and infrastructure across the region in order to mitigate the financial risks posed. Due to the extent and cost of the proposed up grades, the procurement of a design, build, financial and operational contract over 25 years has been proposed – forming the Greater Manchester Waste PFI contract. Scott Wilson have been assisting Costain, the preferred bidder, during the preferred bidder stage.

Scott Wilson was commissioned by Costain to design ground investigations at a number of GMWDA sites where extensions or additions to the existing waste management facilities are being considered. Due to project constraints, phase 1 desk study reports were not undertaken prior to the design of the ground investigations, however, Scott Wilson did schedule the ground investigations based on data provided by Entec Ltd, walkover surveys and using our professional judgement.

The ground investigations have now been completed and subsequently, Scott Wilson have been commissioned by Costain to undertake a geo-environmental assessment of the Reliance Street site, Manchester (Figure 1).

This assessment comprises a Phase I desk study assessment report and a review of the ground investigation conducted by Soil Mechanics as sub-contractor to Costain Geotechnical Services Ltd (CGSL) during May 2007. The purpose of the assessment is to provide a baseline statement of the site in its current condition prior to the proposed development works.

This interpretative report comprises both qualitative and semi-quantitative risk assessment that has been used to refine the preliminary site conceptual risk model provided by Entec Ltd (June 2006). The output of the risk assessment has been used to

provide a baseline condition of the site relating to ground and water contamination, and potential generation of ground gases. Issues related to planning conditions for the site are not covered in this document.

1.2 Development Proposals

The site is currently an active waste management facility. Immediately north of the site is a grassed area with a tree-covered embankment and a steep drop off to the Moston Brook. It is proposed to expand the facility to the north of the current operational areas on an area of raised ground. The proposed development includes the construction of a new maturation building, process building, bio-filters, tanks and effluent treatment plant household recycling plant, Bio filters, car parks, crushers and pulpers. Existing buildings in the southern site are to be retained. The northern tip of this area forms the crest of a slope leading to Moston Brook at the toe. The slope is approximately 15 m in height and at an angle of approximately 35 degrees.

2. ENVIRONMENTAL SETTING

2.1 Site Location and Description

The Reliance Street Site (the site) is located in the Newton Heath area of Manchester at National Grid Reference SD880010. The site is approximately 3.1 hectares and is accessed via Reliance Street.

The site accommodates two waste facility services; the North Manchester Materials Recycling Facility (MRF) and Household Waste Recycling Centre (HWRC).

There is a large building on the site which accommodates the two tipping halls. An underground fuel tank is located to the west of the site.

The HWRC is located to the north of the site and is predominantly surfaced with hardstanding and is located on two levels. A small portacabin is located at the HWRC for operatives and a small office block and gatehouse is located which operates the weighbridge.

The MRF is at two significantly different elevations. The lower level contains a rail siding. The MRF area is predominantly surfaced by concrete throughout, with the exception of grassed areas to the west of the site.

The area to the north of the site that is to be used in future development currently consists of soft landscaping, grass and a tree-covered embankment.

A site location plan is included as Figure 1 and a site layout plan is included as Figure 3.

2.2 Published Geology

Introduction

The BGS 1:50,000 scale map, Sheet 85 (Manchester), Drift Edition (Figure 2) indicates that the site is underlain by drift deposits of Boulder Clay (Glacial till). Glacial Till is a typical deposit of the glacial period throughout northern Europe and America. Usually Glacial Till is a stiff tough clay devoid of stratification, although varieties do exist which are distinctly laminated.

According to the BGS 1:10,560 (6" to 1 mile) Geological sheets (Solid) 85 Manchester, the solid geology beneath the drift deposits comprises of Collyhurst Sandstones, within the Sherwood Sandstone Group, a typically soft red sandstone with alternating fine and coarse grained sand. The Collyhurst sandstone was formed during the Permian period approximately 248 to 290 million years ago. It is of Aeolian origin and formed in a sea-sand environment. Thickness of the deposit varies between 150 and 300 m. The Collyhurst sandstone is classified as a Major Aquifer.

Coal Authority Information

The Coal Authority has indicated that historically the site was likely to be in a zone of influence from four seams of coal at 440 m - 880 m depth. These were last worked in 1968 and any ground movement from these coal workings should have ceased by now. At present, the site is not likely to be within a zone of influence from any current coal workings.

2.3 Hydrogeology

The following information concerning the hydrogeological situation at Reliance Street is summarised from the available published information for the Site including the Envirocheck Report and the Environment Agency Website.

The Collyhurst Sandstone, part of the Sherwood Sandstone Group is classified as a Major Aquifer. Major Aquifers are highly permeable formations usually with a known or probable presence of significant fracturing. They may be highly productive and able to support large abstractions for public water supply and other purposes.

The glacial drift deposits are deemed to be of low permeability occurring at the surface and overlying a Major Aquifer.

The overlying soils are classed as being of High Leaching Potential (U). This classification is based upon fewer analytical observations than in other areas and is designated to reflect the soil quality for areas of restored mineral workings and urban areas. A worst case vulnerability classification (H) is assumed until additional information can be provided.

There are no Source Protection Boreholes within the vicinity of the site and therefore the site is not located within an Environment Agency Source Protection Zone for potable water abstraction.

There are six industrial abstractions for ground water within 2km of the Site (Envirocheck, 2007; Appendix D). One of these abstractions is located within 1000 m of the site boundary (approximately 829 m to the east) and is used for cooling at a Chemicals company. This licence is currently revoked.

We are not aware of any mine water discharges, nor deep pumped mine waters in the vicinity of the site.

With regard to the overall hydrogeology at Reliance Street, for both environmental and geotechnical considerations, the following scenarios are anticipated:

- shallow groundwater is expected to be present in *made ground* deposits overlying the *glacial drift* deposits and in the glacial deposits. This may provide base flow to the Moston Brook (approximately 55 m away from the new development) and providing a potential contaminant migration pathway; and,
- deep groundwater is expected to be present in the *Collyhurst sandstone* strata,

2.4 Hydrology

The nearest surface watercourse is:

- The Moston Brook located approximately 55 m to the north.

The water quality of the Moston Brook was recorded by the Environment Agency as River Quality F (Bad) in 2000.

The site is not located within a fluvial indicative floodplain.

3. HISTORIC LAND USE

A comprehensive review of all the historical Ordnance Survey mapping available was provided by Entec (June 2006; Appendix A). The information was obtained from the Landmark Group Envirocheck Report (Appendix D). For clarity, the information is briefly summarised in the following table.

Table 3.1 Historical map information

Date	On Site	Surrounding Area
1893	The southern boundary of the site now has a railway line going through it (Lancashire & Yorkshire Railway, Hollinwood Branch). The remainder of the site is open land. Two small buildings border the northwest edge of the site. A large building borders the southeastern edge of the site.	Residential housing is present to the west of the site. The Moston Brook runs in an east-west direction north of the site. Further north of the brook are mill ponds. Moston Mill (Bleach and Print) is located northwest of the site, with a small residential area adjacent to the mill. A sand pit is located to the northeast of the site. Slightly further northeast Spring Valley Dye Works is present. Southeast of the site is Dob Lane End Mill and reservoir and a residential area, and further southeast is a cotton mill. The railway runs to the south of the site in an approximate east-west direction. Further south parallel to the railway runs a tramway. South of the tramway is a brewery. A saw mill is located southwest of the site and Deal Lane railway station is located slightly further north of the saw mill.
1908	The majority of the site is a clay pit. The buildings on the northwest edge of the site have been redeveloped into residential housing.	More residential housing is present to the east of the site including the presence of a school. The reservoir associated with Dob Lane End Mill is no longer present. A football ground is located to the south of the site beyond the tramway.
1922	The building previously present on southeastern edge of the site is no longer shown on the map.	Moston Mill is no longer present.
1951	A timber yard is present and occupies the	The Oldham Road has replaced the tramway.

Date	On Site	Surrounding Area
	majority of the site. More residential housing is encroaching onto the site at the northwestern corner.	The Spring Dye Works to the northeast of the site is no longer present. In the northeast area is a refuse heap and allotment gardens. More residential housing has developed south of the railway line.
1967-1969	No significant changes.	No significant changes.
1972	Some of the housing in the northwestern corner of the site has been replaced by allotments.	Broadhurst County Primary School is located north of the site. The old mill ponds to the north of the site are no longer present.
1977-1980	The ancillary building present on the timber yard is no longer present. There is no longer residential housing present on the northwestern edge of the site. The allotments on the site have been divided up but no buildings are present on the land. There are a few ancillary buildings present to the north of the previous allotments.	No significant changes.
1983	The site is occupied by a refuse destructor and associated buildings	Less residential housing is present to the southeast of the site. The area to the south of the railway is an industrial area containing works and warehouses.
1989	No significant changes.	No significant changes.

4. SUMMARY OF ENVIROCHECK REPORT

A detailed summary of the Envirocheck Report (Appendix D) is contained within Chapter 2 of the Entec, Phase 2 Due Diligence Draft Report (June 2006), which is contained in Appendix A.

The Envirocheck Report contains the following pertinent information, to name but a few:

- Current Industrial Activities;
- Discharge consents;
- Pollution incidents to Controlled Waters;
- Air pollution controls; and
- Permitting;

For clarity a summary of the information appertaining to the site itself and to within a 250 m buffer zone from the site boundary is contained in the following table.

Table 4.1 Summary information appertaining to the site

Data Type	Onsite	No. Within 250 m		Description
	Number	Number	Distance (m)	
Air Pollution Controls		5	144-214	All relate to petrol filling stations
Discharge Consents		1	55	Discharge of other matter – surface water
Pollution Incidents to Controlled waters		5	146-210	All entries occurred to the northeast and northwest of the site and were categorised as minor incidents
Prosecutions Relating to Authorised Processes		1	220	Keeping controlled waste in Breakers yard. Verdict: Guilty

Data Type	Onsite	No. Within 250 m		Description
	Number	Number	Distance (m)	
Ground Water Vulnerability	Yes			Major aquifer (Collyhurst Sandstone)
Licensed Waste Management Facilities	2	4		Onsite relate to GM Waste Ltd for physical treatment facilities. Offsite relate to metal recycling facilities
Registered Landfill Sites		1	214	Very Large (equal to or greater than 250,000 tonnes per year). No known restriction on source of waste
Registered Waste Treatment or disposal Sites	3	2		Onsite relate to Pulverisation and Treatment. Offsite relate to scrapyards.

The reader is referred to the Entec Report (Appendix A) and the Envirocheck Report (Appendix D) for information beyond the 250 m buffer zone included in the above summary.

The appreciation of the surrounding land uses, permitting and pollution incidents is essential to fully understand the potential for off site contamination, which may influence the baseline condition of the site at the current time or at some future point.

5. PRELIMINARY PHASE 1 RISK ASSESSMENT

5.1 Overview

Environmental Liabilities can arise through provisions contained within Statutory Legislation including; Part IIA of the Environmental Protection Act 1990 (Part IIA), the Water Resources Act 1991, the Groundwater Regulations 1998 and the Water Act 2003. Current best practice recommends that the determination of potential liabilities under Part IIA be carried out using the process of risk assessment. Risk assessment in this instance is defined as the process of assessing the likelihood and magnitude of harm being caused to a receptor. For a risk to exist, all three of the following elements must be present:

Source: hazardous substance that has the potential to cause adverse impacts.

Pathway: route whereby a hazardous substance may come into contact with the receptor: examples include ingestion of contaminated soil and leaching of contaminants from soil into watercourses.

Receptor: target that may be affected by contamination: examples include human occupants/users of site, water resources (rivers or groundwater), or structures.

For a risk to be present, there must be a viable pollutant linkage; i.e. a mechanism whereby a source impacts on a receptor via a pathway. The absence of one or more of each component (source, pathway, receptor) would prohibit a viable pollutant linkage being established. The identification of potential pollutant linkages is based on a Conceptual Model of the site, which is subject to continual refinement as additional data becomes available.

Scott Wilson identified the need for further ground investigation to refine the conceptual model of the site to establish whether the three elements are present for the preliminary risks identified, and to establish whether there are any potential constraints on the development of the site with regard to any risk posed by any potential contamination sources at the site. The various components of the model are discussed throughout this report to provide a baseline condition for the Site.

NOTE: *This report is intended only to serve the purposes of a baseline condition assessment. The CSM and risk assessments contained within the report relate to the current site condition only and do not relay information about any future site condition during or post development.*

5.2 Preliminary Conceptual Site Model (CSM)

A preliminary CSM has been developed based on the CSM provided by Entec and further data obtained which is relevant to the site. The CSM is summarised below.

Table 5.1 Summary table of Preliminary Conceptual Site Model

Potential Source	Contaminants	Area
Former Timber yard	Copper – chromium-arsenic solutions, creosote, light Light organic solvents	Whole site (notably central and western area)
Imported Fill Materials	Miscellaneous including metals, organic and compounds	Areas of filling, inorganic potentially all site
Hydrocarbons from 30 000 L Underground storage tank	Diesel range hydrocarbons	Adjacent to the storage tank
Adjacent Railway	PCBs, Dioxins, Phenol, Hydrocarbons, PAHs, Metals and asbestos	To the south of the site
Contaminated soil within Made Ground	Miscellaneous potential contaminants including , metals oils, organic solvents, acids, alkalis	Potentially across the whole of the site
Potential Receptors		
Human	Current site users (general public, site workers) Off-site residential properties Maintenance workers	
Controlled Waters	Major Aquifer – Collyhurst Sandstone Surface water course – Moston Brook	
Property	On site structures Underground services (water supply)	
Potential Pathways		
Direct contact, Inhalation, Ingestion	Limited due to widespread presence of hardstanding across the site, although landscaped areas present within the west of the site. Maintenance workers during excavations on site.	
Leaching to groundwater	Vertical migration of contaminants is limited due to the low permeability of the boulder clay.	
Surface water migration	On site drains and interceptor to mains sewer On-site foul drainage system discharges directly to foul sewer in Winifred Road.	
Gas migration	Gas migration through soil strata and accumulation in site buildings	
Services	Underground services (water supply pipes) cross the site area.	

6. REVIEW OF EXISTING INFORMATION

6.1 Previous Desk Studies

Entec Limited have conducted a desk study (Phase 1 and 2) for the site which is reproduced in Appendix A.

Entec completed a Phase 1/Phase 2 Due Diligence Draft Reports for the site in June 2006. The Entec reports highlighted the previous use of the site as a timber yard between 1956 to 1982. The activities carried out on the site are unknown, however timber treatment may have occurred. Mineral extraction took place prior to 1956 which extended beneath the site. The report encountered normal concentrations of carbon dioxide and low gas flow rates. Elevated concentrations of copper and zinc were identified in the Made Ground. PAH contamination was encountered locally in the Made Ground and is unlikely to significantly impact upon groundwater quality. Groundwater at the site does not appear to be significantly impacted by contamination. Ammoniacal Nitrogen was encountered in the groundwater but was not readily leachable from the soil at this location.

Based on the existing and previous uses of the site, it is not possible to identify areas that are of a particularly higher risk of contamination than others.

6.2 Previous Ground Investigations

The following documents have been authored concerning the intrusive site investigation at Reliance Street.

- Entec UK Limited, June 2006 for Greater Manchester Waste Authority – Phase 2 Due Diligence Audit – North Manchester MRF and HWRC. Draft report.
- Soil Mechanics, Factual Report on Ground Investigation, August 2007.

The above reports highlighted are referred to throughout this document. The information from exploratory investigations by both Entec and Soil Mechanics are included for all assessments contained within this report with the exception of the human heath risk assessment contained in Section 9 of this document.

7. SITE INVESTIGATION WORKS

7.1 Objectives

The objectives of the ground investigation (GI) were initially to provide information on ground conditions and material parameters to minimise geotechnical risk and to aid design of foundations, pavements, slabs and retaining structures. The scope of the investigation was later increased to include a baseline contamination assessment, which was agreed with GMWDA's representatives Entec.

The following exploratory holes were initially proposed;

- Five (5 No.) cable percussive boreholes
- Five (5 No.) machine dug trial pits
- Eight (8 No.) window samples

The scope of contamination analysis is included in section 8.5 of this report.

For the purposes of this report, the level of data generated is considered to be adequate for this baseline contamination assessment.

A preliminary risk assessment was provided in the Entec report, (June 2006). In addition to the potential contaminant sources identified in the Entec (2006) preliminary CSM the following additional potential sources have been identified.

- Asbestos from any former structures;
- Soil and groundwater contamination from possible made ground;
- Soil and groundwater contamination from former timber yard;
- Ground gas generation from made ground;
- Soft or compressible ground associated with backfilled structure.

The GI was designed as described above and the data has been used to identify and further quantify the risks for this baseline contamination assessment.

The approach to the design of the site investigation was based on guidance given in British Standard (BS) 10175, BS5930, Construction Industry Research and Information Association (CIRIA) Special Publication 32, and the Environment Agency Contaminated Land Research document (CLR) 11. The investigation was designed to provide information for the refinement of the conceptual model and to undertake a more detailed assessment of potential risks and liabilities associated with the past and current uses of the site. The investigation was combined to include geotechnical testing to provide advice on the strength and compressibility of the near surface soils in order to provide advice for foundation and infrastructure design (this will be reported on under a separate cover).

The whole site investigation was targeted to:

- investigate the extent and nature of potential soil, ground water, surface water and ground gas contamination at the site;
- investigate the geotechnical constraints to development resulting from the ground conditions; and,
- refine the conceptual model for the site with reference to the CSM proposed by Entec Ltd (2006) and summarised in Table 5.1.

7.2 Investigation Rationale

In designing the intrusive ground investigation works, suites of chemical analysis for soil samples, leachability testing and ground water samples have been selected taking into account contaminants likely to be present on the site, current analytical techniques, current best practice such as CLR 8 and BS10175, the detection limits for the assessment against statutory guidance such as Environmental Quality Standards (EQS), Soil Guideline Values, Generic Assessment Criteria and CIRIA C659.

A total of 21 samples were scheduled for testing. Full suites of contaminants were scheduled due to the unknown origin of the made ground at the site which was likely to be heterogeneous in nature. In addition the former site usage as a timber yard and possibly for timber treatment and the current usage as a waste facility services indicate that a variety of potential contaminants of concern may be present in the site soils.

As Photo-Ionisation Detector (PID) were variable throughout the samples all 21 samples were scheduled for Semi-Volatile Organic Compounds (SVOCs) analysis. Eight samples have been scheduled for dioxin/furan analyses and five samples have been scheduled for Poly Chlorinated Biphenols (PCBs).

The site overlies a Major Aquifer (Collyhurst Sandstone) and the Moston Brook is located nearby (approximately 80 m north) therefore eight samples were scheduled for leachability analysis.

7.3 Summary of Fieldwork

The fieldwork was undertaken by Soil Mechanics (2007) comprising of cable percussion boreholes, trial pits, window sampler holes, in situ testing and laboratory testing was carried out. The intrusive site investigation was undertaken between 2nd April and 17th April 2007.

The fieldwork was carried out in general accordance with BS 5930 (1999) and Part 9 of BS1377 (1990)

A Cable Avoidance Tool (CAT) was used to identify the possible presence of live services prior to the formation of the dynamic probeholes, drilling of windowless sample probeholes and boreholes and the excavation of trial pits. The locations of the exploratory holes are shown on Figure 4.

The full Factual Report for the ground investigation is included in Appendix B (Soil Mechanics, August 2007).

The site investigation works comprised:

- Seven (7 No.) cable percussive boreholes to depths ranging in depths between 0.50 m bgl and 35.05 m bgl.
- Five (5 No.) machine dug trial pits to depths ranging between 2.20 m bgl and 4.60 m bgl.
- Ten (10 No.) window samples to depths ranging between 0.58 m bgl and 5.00 m bgl.

A comprehensive suite of chemical testing was scheduled as per the testing suite detailed in section 8.5 of this report.

8. SUMMARY OF SITE INVESTIGATION FINDINGS

8.1 Ground Conditions

The general ground conditions for the site are summarised in Table 8.1. The exploratory logs for the site as provided by the site investigation contractor, Soil Mechanics (July 2007), are included in Appendix B.

Table 8.1 Summary of ground conditions encountered.

Stratal classification	Strata	Depth top encountered (m bgl)	Depth base encountered (m bgl)	Thickness range (m)
Superficial	Topsoil	0.00	0.05-0.50	0.05-0.50
Anthropogenic Material	Made Ground	0.00-0.50	1.20-12.65	1.20-12.50
Recent deposit	Natural Glacial Till Deposits	1.20-12.65	35.05 T	26.75

T = Exploratory hole terminated

 # Inferred from surrounding borehole logs attained for the site from the British Geological Survey

Topsoil

Topsoil was encountered across the site in nine of the exploratory holes. The topsoil had a mean thickness of 0.19m.

Made Ground

Made ground was encountered in each of the exploratory hole locations. The nature of the material generally comprised reworked glacial clays and gravelly sands and clays with fragments of sandstone, limestone, coal, mudstone, brick, ash, clinker ,tar and slag.

The Made Ground extended from ground level to depths ranging between 1.20 m bgl (BH1A/07) and 12.65 m bgl (BH2/07). The borehole logs infer that the Made Ground thicken towards the north east of the site (where original ground levels dipped towards the Moston Brook).

Shallow Made Ground was encountered in BH1A/07. After closer inspection at the Borehole logs for this site it was considered that the strata beneath the Made Ground could have been mistaken for glacial deposits due to the material consisting solely of natural materials. Therefore, there is the possibility that the Made Ground for this borehole may extend deeper than is currently logged.

In situ testing confirmed that the predominately cohesive made ground material ranged from very soft to very stiff in strength. The granular made ground deposits ranged from a very loose to dense made ground material.

Numerous obstructions were encountered during the site works. The obstructions ranged from refusals and services obstructions to the window sampler unable to penetrate the ground further. In many cases the obstructions were impenetrable and led to the termination of the boreholes.

Natural Glacial Till Deposits

Natural glacial till deposits were encountered in all of the deep exploratory holes directly beneath the made ground and comprised of an alternating sequence of glacial gravelly clays and sands, recorded to the termination of the deepest borehole at 35.05 m bgl.

No sandstone boulders were encountered within the glacial till.

In situ testing confirmed that the cohesive glacial deposits ranged from soft to very stiff in strength. The granular glacial deposits ranged from very loose to very dense.

Bedrock

Bedrock was not encountered during the Soil Mechanics investigations.

8.2 Groundwater Levels

Groundwater encountered during the intrusive site investigation

Ground water strikes during field works at the site are summarised in Table 8.2. In the remaining exploratory holes, no water was encountered during the intrusive investigation.

Table 8.2 Summary of groundwater encountered during ground investigation

Exploratory Location	Stratum Encountered	Water Strike (m bgl[1])	Water Strike (m AOD[2])
NM/BH1*	Made Ground	2.60^	84.30
NM/WS1*	Made Ground	2.50^	87.93
NM/WS2*	Glacial Sand	2.50^	78.47
NM/WS3*	Glacial Sand	2.60^	78.81
NM/WS4*	Glacial Clay	1.25^	81.76
NM/WS5*	Made Ground	2.35	84.29
BH1A/07#	Made Ground/ Glacial Sand[3]	7.50	75.59
BH4/07#	Made Ground	0.45	85.98
BH4A/07#	Glacial Clay	11.70	75.03
TP5A/07#	Made Ground	1.80	84.77

NOTE:
*** Entec Ltd June 2006**
 # Soil Mechanics Ground Investigation July 2007
^ Seepage
1. m bgl = metres below ground level;
2. m AOD = metres above ordnance datum.
3. Unclear origin of material

Groundwater levels recorded during monitoring

To date six rounds of ground water monitoring have been undertaken between 18/04/2007 and 04/06/2007 for the Soil Mechanics July 2007 ground investigation, the data are summarised in Table 8.3.

Table 8.3 Summary of groundwater monitoring levels.

Location	Response zone (m bgl) [1]	Stratum monitored	Groundwater depth range (m bgl)	Groundwater Elevation Range (m AOD) [2]	Base of well range (m bgl)	Base of well elevation range (m AOD)
NM/BH1*	6.5-11.2	Glacial Sand	Dry at 11.22	Dry at 75.68	11.22	75.68
NM/WS1*	1.1-4.5	Made Ground	Dry at 4.4	Dry at 86.03	4.5	86.93
NM/WS2*	1.1-4.00	Glacial Sand	Dry at 2.47	Dry at 78.50	4.00	76.97
NM/WS3*	1.1-6.00	Glacial Sand	Dry at 4.56	Dry at 76.85	6.00	75.41
NM/WS4*	1.1-6.00	Glacial Clay	1.15	Dry at 81.86	6.00	77.01
NM/WS5*	1.0-2.25	Made Ground	Dry at 2.25	Dry at 84.39	2.25	84.39
NM/WS6*	1.00-5.2	Glacial	Dry at 5.2	Dry at 80.52	5.2	80.52

Location	Response zone (m bgl) [1]	Stratum monitored	Groundwater depth range (m bgl)	Groundwater Elevation Range (m AOD) [2]	Base of well range (m bgl)	Base of well elevation range (m AOD)
		Sand				
BH1A/07#	6.00-10.00	Made Ground/ Glacial Sand and Silt	5.47-5.74	77.62-77.35	10.00	73.09
BH2/07#	12.00-14.00	Made Ground and Glacial Clay	11.57-11.71	74.95-74.81	14.00	72.52
BH3/07#	1.00-6.00	Made Ground	Dry		6.00	80.38
BH4A/07#	11.00-14.00	Glacial Clay and Sand	10.30-10.40	76.43-76.33	14.00	72.73
WS1/07#	1.00-2.00	Made Ground	Dry		2.00	84.50
WS2/07#	1.00-3.00	Made Ground	Dry		3.00	82.89
WS3/07#	1.00-3.00	Made Ground and Glacial Clay	Dry-2.75	Dry-83.13	3.00	82.88
WS4/07#	1.00-3.00	Made Ground and Glacial Clay	Dry		3.00	
WS8/07#	1.00-2.00	Made Ground	1.00-1.22	85.90-85.68	2.00	84.90

NOTE: The information contained within this table is for six (6 no.) monitoring visits.
*** Entec 2006**
 # Soil Mechanics Ground Investigation 2007;
1. m bgl = metres below ground level;
2. m AOD = metres above ordnance datum.

8.3 Visual and Olfactory Evidence of Contamination

Visual and olfactory evidence of contamination encountered during the intrusive site investigation is summarised in Table 8.4. The information held in Table 8.4 relates to the materials encountered primarily in the made ground which are likely, from prior experience, to cause contamination either directly or from the generation of ground gas during decomposition of organic and / or putrescible materials.

The olfactory evidence relates to the materials for which an odour was noted by the engineer however, this does not mean that samples of material from the other locations did not yield an odour.

Table 8.4 Visual and Olfactory Evidence of Contamination in Exploratory holes

Location	Visual	Olfactory
NM/BH1*	Clinker, ash	Hydrocarbon and paraffin odour
NM/W5*	Ash	"Burnt" odour
BH3/07#	Tarmac, clinker, tar	N/A
BH4/07#	Tarmac	N/A
BH4A/07#	Slag, ash	Strong phenol odour
BH5/07#	Metal	N/A
TP1/07#	Roots, rootlets, rare wood	Strong odour
TP3/07#	Tarmac, asbestos pipe, plastic tubes	Strong petrol odour
TP4/07#	Rootlets, rare plastic	N/A
TP5/07#	N/A	Strong hydrocarbon odour
WS1/07#	Ash	N/A
WS2/07#	Ash	N/A
WS3/07#	Tarmac, clinker, slag	N/A
WS4/07#	Tarmac, ash, clinker, slag	N/A
WS5/07#	Tarmac	N/A
WS5B/07#	Tarmac	N/A
WS6/07#	Rootlets, slag	N/A
WS8/07#	Rare wood	N/A

Note: Where there is no information provided for olfactory evidence this is because the engineer recorded no evidence.
*** Sourced from Entec June 2006**
 # Sourced from Soil Mechanics 2007

It should be noted that the Paraffin odour encountered in location NM/BH1 was from the glacial gravels.

8.4 Photo-Ionisation Detector Survey

During the drilling of windowless sample probe holes, boreholes and excavation of trial pits by Entec Ltd. (2006), sub-samples were taken at intervals of approximately 1.00m in the made ground and natural strata to screen for the presence of VOCs using a PID. The results of the survey are indicated on the exploratory hole logs. A list of the samples which yielded the highest PID readings above the limit of detection (0 ppm) of the instrument are listed below.

Table 8.5 Maximum PID Readings above the LOD for each exploratory hole

Location	Depth	PID Result (ppm)
BH1A/07	3.00	75.00
BH1A/07	6.50	1.90
BH2/07	1.00	2.10
BH2/07	2.00	2.30
BH3/07	2.00	6.10
BH3/07	4.00	4.60
BH4A/07	7.60	2.10
BH5/07	3.00	11.00
BH5/07	5.00	5.60
TP1/07	2.50	0.30
TP2/07	2.00	0.40
TP3/07	2.70	3.60
TP3/07	1.40	3.50
TP4/07	3.00	19.90
TP5/07	2.00	22.70
WS1/07	2.60	0.80
WS2/07	3.60	0.90
WS3/07	4.10	1.30
WS4/07	2.10	1.40
WS5/07	0.50	1.20
WS6/07	2.00	1.20
WS7A/07	0.50	0.90
WS7B/07	0.60	1.00

8.5 Chemical Analysis

Suites of chemical analysis are comprehensive to reflect the potentially heterogeneous nature of the made ground encountered at the site.

Soil

A total of twenty-one (21 No.) soil samples were submitted for analysis for the suite of determinands listed in Table 8.6 from the whole investigation.

Soil Leachability

Leachability testing was undertaken in accordance with BS EN 12457 single stage 2:1 (Liquid:Solid). The resulting eluate from the leaching procedure was analysed for a suite of determinands (Table 8.7).

Eight (8 No.) samples were submitted for determination of leachable contaminants selected from the twenty-one (21 No.) soil samples submitted for the whole investigation. Seven of the eight samples selected for analysis were from the made ground. The remaining one sample is from BH1A/07 where it is currently unclear whether the strata is Made Ground or Glacial deposits.

Groundwater

A total of three (3 No.) groundwater samples were submitted for analysis for the suite of determinands listed in Table 8.8.

Laboratory Quality Assurance (QA) and Control (QC)

All chemical analyses have been carried out using UKAS accredited laboratories. UKAS accreditation is illustrated in Tables 8.6, 8.7, 8.8 for the individual elemental analysis within the various suites of testing.

Table 8.6 –Soil Contamination Analytical Suite

Soil Contamination	
Arsenic*	PCB (7 congeners)
Selenium*	Sulphide*
Vanadium	Total cyanide*
Zinc*	Free cyanide*
Cadmium*	TPH screen (carbon banding)*
Nickel*	TPH by GCFID
Chromium*	Poly nuclear Aromatic Hydrocarbons screen by MS
Copper*	Gasoline Range Organics
Lead*	SVOCs and TICs
Mercury	Fraction Organic Carbon*
Sulphate (water soluble)*	Total Moisture Content
Sulphur (elemental)*	Asbestos Screen and ID
pH*	Creosols
Phenol Index	Xylenols
Total sulphur	Trimethylphenols
Phenol	Total Phenols

Note: *UKAS accredited

Table 8.7 –Leachability Testing Analytical Suite

Leachability Testing	
Preparation of leachates in accordance with BS EN 12157 1 stage leaching test (2:1 soil/water)	
Arsenic*	Sulphide (free)*
Barium*	Total cyanide
Cadmium*	Free cyanide
Chloride*	pH*
Chromium*	Conductivity*
Copper*	TPH screen GC/FID
Lead*	Gasoline Range Organics*
Mercury*	VOC*
Nickel*	SVOC and TIC*
Nitrate*	Phenols
Selenium*	Dimethylphenols
Total Sulphur*	Trimethylphenols
Zinc*	Cresols
Sulphate*	Ammoniacal Nitrogen*
BTEX	

Note: *UKAS accredited

Table 8.8 Ground Water Analytical Suite

Suite 4 - Ground Water Suite	
Arsenic*	sulphide
Barium*	Total cyanide
Boron*	Free cyanide
Cadmium*	Complex cyanide
Calcium*	pH*
Chloride*	VOC
Chromium*	SVOC and TICs*
Copper*	TPH by GC/FID
Lead*	Gasoline Range Organics
Magnesium*	Ionic Balance
Mercury*	Conductivity*
Nickel*	Nitrate*
Potassium*	Total Alkalinity*
Selenium*	Total Hardness*
Sodium*	Ammoniacal Nitrogen*
Vanadium*	Cresols
Zinc*	Phenols
sulphate*	VOCs*
Total anions	Dimethylphenols
Total cations	Trimethylphenols
Gasoline Range Organics	

Note: *UKAS accredited
**** UKAS and MCERTS accredited**

9. HUMAN HEALTH RISK ASSESSMENT METHODOLOGY

9.1 Introduction

In assessing the baseline conditions in brownfield land it is anticipated that contamination of soils and ground waters will be present to varying degrees. However, there is no absolute definition of what constitutes "contaminated" soil or ground water. Risk assessment is required to determine whether the potential environmental risks are significant in the context of the site in its current baseline condition.

The site is currently in commercial/industrial use and therefore the following risks require assessment at the site:

- Risk to human health associated with the current use of the site;
- Risks to site structures (buildings, foundations and services); and
- Risks to flora and fauna.

In the following Sections 9.2 and 9.3, these risks will be assessed in accordance with the methodologies discussed in this Chapter (9).

9.2 Determination of Human Health Risk Assessment Criteria

Prior to presenting the results and interpretation of the chemical analytical results for the soil samples, it is necessary to present the rationale to which the data will be compared and subsequently assessed.

Analytical data with regard to soil has been assessed in accordance with current Environment Agency and Department of Environment Food and Rural Affairs (DEFRA) guidance, comprising the Contaminated Land Exposure Assessment (CLEA) model and Soil Guideline Values (SGV) for selected inorganic and organic contaminants. Currently SGV are available for the following inorganic contaminants:

- Arsenic
- Cadmium
- Chromium
- Lead

- Inorganic Mercury
- Nickel
- Selenium

And the following organic contaminants:

- Ethylbenzene
- Toluene
- Phenol

In addition to the CLEA Model and SGV reports, the Land Quality Management (LQM) and Chartered Institute of Environmental Health (CIEH) Generic Assessment Criteria (GAC) for Human Health Risk Assessment report (LQM/CIEH, 2007) have been used for the assessments. Where there are no SGV or GAC values available, the baseline data is provided for information to allow comparison for the baseline contamination assessment.

For dioxins and furans, the World Health Organisation (WHO) published guidance on the assessment of toxicity. The WHO developed toxic equivalency factors (TEF) to the compounds of toxicological concern relative to 2378 TCDD (the most toxic). Multiplication of the concentration of the particular compound by the TEF gives a toxic equivalent (TEQ). The toxicity of the mixture of dioxins and furans is the sum of the individual TEQ relative to 2378 TCDD. There are no published SGV or GAC data for dioxins and furans available, therefore Scott Wilson derived GAC in the CLEA UK model to provide a conservative tier 1 screening assessment against the TEQ sum recorded.

Use of these generic criteria constitute a Tier 1 (semi quantitative) risk assessment based upon a series of standard default assumptions as to ground conditions, contaminant behaviour and the duration and frequency of exposure of the end use receptor group. Tier 1 assessments tend to be relatively conservative as a consequence.

Due to the proposed redevelopment of the site, one exposure scenario is considered appropriate and has been used in the assessments:

- Commercial/Industrial use.

The exposure scenario of commercial/industrial use is considered appropriate for the proposed redevelopment of the site. The chemical data for soils has been assessed using published Tier 1 commercial/industrial use SGV, which are based on relatively conservative default assumptions regarding the exposure of site users to bare soil and dusts derived from the subject site.

9.3 Contamination Assessment

All soil samples were taken from the exploratory holes and trial pits constructed on site during the ground investigation conducted on the 2nd to 16th April 2007. The samples were taken from depths ranging from 0.50 m to 7.10 m below ground level (bgl). A total of twenty-one soil samples were sent to an accredited laboratory for chemical analysis.

The rationale for the scheduling of samples for soil chemical analysis was based on the visual and olfactory evidence encountered, and a range of representative samples from each strata encountered.

Table 8.4 shows the visual and olfactory evidence encountered during the intrusive site investigation. Odours ranging from a slight hydrocarbon odour to a strong odour was present throughout the made ground at NM/BH1. A strong paraffin odour was present in the glacial deposit of NM/BH1. A burnt odour was identified in the made ground at NM/WS5. A strong phenol odour was identified within the made ground of BH4A/07. A strong odour, a strong petrol odour and a strong hydrocarbon odour were identified in the made ground at TP1/07, TP3/07 and TP5/07 respectively. Made ground was encountered across the site at depths from 0.50 m bgl within NM/WS3 to 12.50 m bgl within BH2/07.

A total of nine soil samples taken from the Soil Mechanics report (2007) were used for the human health risk assessment taken from depths ranging from 0.0m to 1.0 m bgl.

The summary statistics of the determinands for metals, metalloids and inorganics are summarised in Table 9.1 and for organics in Table 9.2. The results are presented fully within the Soil Mechanics report (2007) and in our statistical tables in Appendix E.

Metals, Metalloids and Inorganics

All soil samples recorded concentrations of the metal, metalloid and inorganic contaminants and are summarised in Table 9.1.

The results show that the maximum concentrations for all of the metal and metalloid determinands are below SGV and GAC for commercial/industrial land use and therefore pose **no significant risk**.

Table 9.1 – Site Summary Statistics for Metal, Metalloid and Inorganic Determinands in shallow soils

	Recorded Concentration (mg/kg)						SGVs, GACs & Dutch (mg/kg)	Pass / Fail
	n	Min	Average**	Max	US95*	St. Dev.		
Arsenic	9	7.5	16.83	165.8	23.37	10.54	500	Pass
Cadmium	9	0.13	0.36	1.05	0.53	0.28	1400.00	Pass
Chromium	9	14.3	28.89	77.7	40.65	18.97	5000.00	Pass
Copper	9	24.9	77.50	135.3	101.52	38.74	45700.00	Pass
Lead	9	15.6	168.08	569.4	269.34	163.32	750.00	Pass
Mercury	9	0.1	0.50	1.91	1.36	0.57	480.00	Pass
Nickel	9	19.0	27.22	39.5	31.85	7.47	5000.00	Pass
Selenium	9	0.5	0.66	1.04	0.77	0.18	8000.00	Pass
Vanadium	9	17	28.93	52.0	34.84	9.53	4250.00	Pass
Zinc	9	73.4	152.47	232.4	188.09	57.45	188000	Pass
pH	10	7.7	8.23	8.6	8.41	0.29		
Free Cyanide	9	0.5	1.01	5.1	1.96	1.53		
Total cyanide	9	0.5	15.78	87	33.72	28.94		
Sulphide	9	11.3	49.72	167	81.46	51.18		

Note: *** Upper 95th percentile value, based on the mean value test given in CLR7.**
**** indicates the mean has been calculated using values to be at detection limit.**

The recorded values for Cyanide (free) and Sulphide are above the standard LOD of analysis. However, it is not considered that the recorded levels of Cyanide (free) and Sulphide pose a significant risk to human health.

The average pH of the strata underlying this area is 8.51, with a minimum of 3.3 and a maximum of 11.9. This indicates the variability in alkalinity of the ground beneath the site. Although the average pH throughout the site was neutral BH4A/07 at 7.1 m depth indicated a pH reading of 3.3. The next lowest pH value was 7.7. Samples taken from BH2/07 at 3 m depth, BH3/07 at 3 m depth and TP3/07 at 3.6 m produced pH readings of 10.5, 10.4 and 11.9 respectively. Consequently, there is a localised potential for chemical attack on development infrastructure (e.g. piles) from the potential leachates produced by this material.

Based upon the results obtained for the soils analysis, it is considered that the metals, metalloids and inorganic determinands pose a **low to negligible risk** to current site users based upon reference to the SGV and GAC for commercial/industrial land use.

Organic Contaminants

Table 9.2 shows the summary statistics for the organic contaminants encountered at the site.

Table 9.2 – Summary statistics for organic determinands in shallow soils

	Recorded Concentration (mg/kg)						SGVs, GACs & Dutch (mg/kg)	Pass / Fail
Determinand	n	Min	Average**	Max	US95*	St. Dev.		
Hydrocarbons >C8-C10#	9	2.00	12.71	91.6	31.13	29.71	65.90	Pass
Hydrocarbons >C10-C12#	9	2.00	24.30	183	61.28	59.64	625	Pass
Hydrocarbons >C12-C16#	9	3.00	103.12	732	250.15	237.15	12200	Pass
Hydrocarbons >C16-C21#	9	5.60	255.70	1690	592.14	542.64	9190	Pass
Hydrocarbons >C21-C35#	9	18.60	677.24	4040	1469.44	1277.74	9250	Pass
Naphthalene	9	0.09	1.97	12.09	4.53	4.13	290	Pass
Fluorene	9	0.09	2.42	18.75	6.22	6.14	59000	Pass
Benzo(a)pyrene	9	0.10	5.64	34.43	12.43	10.95	29.70	Pass
Dibenzo(a,h)anthracene	9	0.10	0.90	5.23	1.92	1.65	29.70	Pass
Phenol	9	2.00	21.56	136.0	48.33	43.18	21900	Pass
Hexachlorobutadiene	9	0.6	5.1	34.0	11.75	10.89	1.98	Fail
PCB$	5	32.9	35.56	37.8	37.13	1.74	-	-

Note: *** Upper 95th percentile value, based on the mean value test given in CLR7.**
**** indicates the mean has been calculated using values to be at detection limit**
$ samples taken from all depths
 # The laboratory analysis did not split the aliphatic and aromatic components of the petroleum hydrocarbons, therefore the most conservative GAC of the aromatic or aliphatics has been used as a conservative screen.

The results show that the maximum concentrations of all of the organic determinands with the exception of Aliphatic chains >C8-C10 are below the SGVs/GACs for commercial/industrial use. However, it should be noted that by looking at the 95th percentile values for each determinand, all parameters are within their respective SGV/GAC.

One soil sample within TP5/07 at 1.0 m recorded Benzo(a)pyrene at 34.43 mg/kg and Aliphatic chains >C8-C10 at 91.9 mg/kg which exceeded their respective GACs. The Benzo(a)pyrene at this site is not classified as a hotspot, however aliphatic chains >C8-C10 is a statistical outlier, and therefore a hotspot. The borehole log for TP5/07 also indicates elevated PID readings and a hydrocarbon odour at 2 m depth.

Hexachlorobutadiene was observed at or below the Limit of Detection (LOD) at all of the locations, however, the LOD was greater than the GAC of 1.98 mg/kg. In addition the LOD is variable across the samples from <0.6 to <34.0 mg/kg. The maximum value recorded is from TP5/07 at 1.0 m (<34.0 mg/kg), although this is not a statistical outlier and therefore not considered a hotspot, all the other samples ranged <0.6 to <3.1 mg/kg. Although the concentrations are likely to be lower than the LOD, it cannot be stated that the true concentrations are less than the GAC, thus there is deemed to be a moderate risk of hexachlorobutadiene contamination across the site.

The highest readings of all organic contaminants listed in Table 9.2 were taken from within soil sample TP5/07 at 1.0 m.

Based upon the results obtained for the soils analysis, it is considered that the organic determinands pose a **low to moderate risk** to current site users based upon reference to the SGV and GAC for commercial/industrial land use. The isolated aliphatic >C8-C10 concentration may however require delineation since it is a statistical outlier and exceeds the GAC potentially posing a risk to the proposed development if the area is not covered by hardstanding.

Dioxins and furans

Dioxins and furans were analysed from eight selected samples within the made ground. The results are summarised in Table 9.3 below.

Table 9.3 – Summary of dioxin and furan analysis

Location	Depth (m bgl)	Total dioxin/furan content recorded (TEQ)(ng/kg)
BH1A/07	1.0	8.696
BH2/07	1.0	15.934
BH4A/07	0.6	9.238
BH4A/07	3.6	7.228
TP1/07	1.0	23.889
TP3/07	0.5	0.621
TP4/07	1.0	9.111
TP5/07	1.0	14.588

The figures in Table 9.3 represent the total values of the toxic dioxin and furan components derived using the WHO method described in Section 9.2. These values can be compared against the GAC derived by Scott Wilson within CLEA UK (Appendix F). For commercial/industrial use with a soil pH of 7 and soil organic matter of 1%, a value of 626ng/kg has been derived. None of the samples exceed the commercial/industrial GAC. The values of the individual congeners are provided within the Soil Mechanics Factual Report.

Asbestos

Asbestos fibres were not detected in any of the twenty-one samples sent for analysis.

Observed contamination identified from samples at depth

The human health risk assessment assesses the top 1m only, however, the deeper soils have some relevance to the baseline condition of the site and therefore have been assessed as a tier 1 screen against the published SGVs and GACs.

For the deeper soils (>1 m bgl), one soil sample within TP3/07 at 3.6 m depth recorded lead at 1249.4 mg/kg which exceed the SGV of 750 mg/kg. Benzo[a]pyrene was recorded at 67.78 mg/kg within BH5/07 at 5 m depth which is more than double the GAC. If piling is required for the development proposals, care should be take with respect to contaminated arisings and appropriate care taken by workers and assessment for waste disposal. Due to these hotspots it can be determined that there is **low to moderate potential of significant harm** from contaminants to site users.

Section Summary

With regard to metals, metalloids and inorganic determinands in shallow soils, a **low to negligible risk** to current site users has been determined.

With regard to organic contaminants in shallow soils, a **low to moderate risk** to current site users has been determined. This assessment is based upon the isolated hotspot of aliphatic hydrocarbons >C8-C10 at TP5/07 at 1m depth. The remainder of organic determinands passed the mean value test. The maximum Benzo[a]pyrene level was also recorded at TP5/07 and whilst this is not considered a hotspot within the statistical analysis, care should be taken by maintenance workers working in this area.

10. CONTROLLED WATERS RISK ASSESSMENT

10.1 Introduction

Risk assessment is required to determine whether the potential environmental risks are significant in the context of the site in its current condition.

The site is currently in commercial/industrial use and therefore the following risks require assessment at the site:

- Risks to controlled waters (i.e. surface water quality and groundwater) due to migration of leachable and mobile contaminants;

10.2 Background Information

Two previous reports have been used as sources of information for the purposes of the following controlled waters risk assessment. These reports are:

- Entec UK Limited, September 2006 for Greater Manchester Waste Authority – Phase 2 Due Diligence Audit – North Manchester MRF and HWRC;
- Soil Mechanics, Factual Report on Ground Investigation, August 2007;

Entec sent ground water samples for laboratory analysis from one ground water monitoring visit in May 2006, Soil Mechanics from one visit in May 2007 and Costain from one visit in September 2007. For the risk assessment relating to leachates, only the Soil Mechanics report has been used since there is no information contained within the Entec report.

10.3 Ground Water Analysis Assessment

Analytical data for ground water has been compared to freshwater Environmental Quality Standards (EQS) as a means of assessing the significance of the results. However, it should be noted that these standards are not directly applicable to leachate (or groundwater), as they have been developed for the quality assessment of surface watercourses with respect to the protection of aquatic life. In the absence

of other applicable UK standards, they serve as a useful, initial, though quite conservative, reference for a Tier 1 risk assessment.

The results have been interpreted in order to assess potential risks to controlled waters. It should be noted that for a risk to be present then a viable pollutant linkage should be identified between the source and receptor. This is discussed previously in Section 5.

The Sherwood Sandstone group, present below the drift deposits, are classified as a Major Aquifer. Major Aquifers are highly permeable formations usually with a known or probable presence of significant fracturing. They may be highly productive and able to support large abstractions for public water supply and other purposes. The site is not located either within a Nitrate Vulnerable Zone nor Source Protection Zone (Landmark, Envirocheck Report, 2005).

This assessment of the groundwater condition is based on the site as a whole, since contaminant transport is not restricted by planning boundaries. Aqueous contaminant transport will occur on a site wide basis, and any pollution potential may impact upon the Moston Brook.

For the purposes of this risk assessment the most appropriate standards for comparison of the contaminant concentrations are the EQS. Since the Site is not located within a source protection zone, or water supply borehole, the use of UK Drinking Water Standards (UKDWS) would not be applicable, however, the standard for polyaromatic hydrocarbons has been used as a conservative screen.

NOTE: *The following summary is a tier 1 screening assessment of the ground water data against the EQS to provide the general baseline ground water quality. This review is not intended to determine ground water flow patterns as there is no data relating to the deeper Collyhurst Sandstone Major Aquifer inferred from the geological mapping.*

Metals, Metalloids and Inorganics

The data shows that with the exception of ammoniacal nitrogen and sulphate (Soil Mechanics and Entec), pH, total cyanide (Soil Mechanics and Costain), sulphide (Soil Mechanics), copper, nickel and zinc (Costain), none of the metals, metalloids or inorganics exceed the EQS.

Ammoniacal nitrogen concentrations range from <0.01-32.3 mg/L (*n*=10) taken from Entec and Soil Mechanics monitoring. The EQS for ammoniacal nitrogen is 0.015 mg/L, and this was exceeded in three locations NM/WS4 (Entec), BH02/07 and BH4A/07 (Soil Mechanics). Sulphate concentrations ranged from 73.4-1870 mg/l and on three occasions the EQS was exceeded (same locations as for ammoniacal nitrogen).

The pH readings taken were between 5.1 and 7.6. Two of these readings were below the EQS of 6.0.

Total cyanide readings ranged from <0.01-1.36 mg/l. Two readings were significantly higher than the EQS of 0.001 µg/l. These readings were taken from BH02/07 (1290 µg/l) and BH4A/07 (1360 µg/l) during the Soil Mechanics investigation and 940 µg/l and 740 µg/l respectively from the Costain monitoring. These concentrations, though significantly greater than the EQS are isolated hotspots and are not considered to present a significant risk to controlled waters.

Sulphide readings ranged from <0.0005 to 3100 µg/l and exceeded the EQS of 0.25 µg/l on two occasions BH02/07 and BH4A/07. Sulphide has the potential to generate acidity when in contact with both water and oxygen, producing sulphuric acid which can attack concrete, and potentially cause harm to both flora and fauna.

The Costain monitoring recorded copper (440 µg/l), nickel (270 µg/l) and zinc (950 µg/l) from BH4A/07 above the following respective EQS 28 µg/l, 200 µg/l and 500 µg/l.

Since isolated exceedances of inorganics were measured in the groundwaters beneath the Site there is potential for a risk to occur to a controlled water receptor. As there are exceedances of ammoniacal nitrogen, sulphate, total cyanide and sulphide, together with the close proximity to the Moston Brook (55 m) it is thought there is **low to**

moderate potential for significant harm to occur. However, it should be noted that the Moston Brook currently holds a river quality General Quality Assessment (GQA) grade of F (Bad). Regardless of the current condition of the Moston Brook, the construction and operation of the site should not have a negative impact on the water quality of river.

Organics

There were no organic results obtained from the Entec report (2006). The Soil Mechanics monitoring recorded levels of petroleum hydrocarbons at BH04A/07 above limits of detection (LOD) for aromatics C10-12 (24.5 µg/l), aromatics C12-16 (33.9 µg/l), aromatics C16-21 (18.5 µg/l) and aliphatic and aromatic C21-35 (18.2 µg/l and 30.4 µg/l respectively) and at BH02/07 for aromatics C16-21 (11 µg/l) and aliphatic and aromatic C21-35 (44.6 µg/l and 52.4 µg/l respectively). The levels of petroleum hydrocarbons recorded are possibly indicative of a localised fuel spill, are not at levels considered excessive and are not suggestive of a wider petroleum hydrocarbon issue.

The Costain monitoring recorded elevated levels of polyaromatic hydrocarbons (PAH) at all three locations monitored, BH01A/07 (7 µg/l), BH02/07 (40 µg/l) and BH04A/07 (4.2 µg/l) above the conservative UKDWS screen for PAH of 0.2 µg/l. No petroleum hydrocarbons above LOD were recorded. The levels of PAH recorded are possibly indicative of a localised hotspot of contamination, are not at levels considered excessive and are not suggestive of a wider pollution issue.

It is therefore considered that there is **low to moderate potential for significant harm** to occur to any receptor as a result of the organics present in ground waters beneath the site.

10.4 Risk Assessment - Soil Leachability

For the purposes of this risk assessment the most appropriate standards for comparison of the contaminant concentrations are the EQS. Since the site is not located within a Source Protection Zone, or water supply borehole, the use of UKDWS would not be applicable.

Inorganics

The data shows that, ammoniacal nitrogen and sulphide exceeded EQS in both the Entec and Soil Mechanics investigations. Sulphate and sulphide exceeded their respective EQS in the Entec report only. Total cyanide and pH exceeded their respective EQS in the Soil Mechanics investigations only.

Ammoniacal nitrogen was observed in three of the thirteen sampling locations at concentrations greater than the EQS (0.015 mg/L). The range of concentrations is 0.01-1.7 mg/l with NM/WS5 at 1.7 mg/l (Entec), NM/BH-01 at 0.9 mg/l (Entec) and TP3/07 at 0.6 mg/l (Soil Mechanics).

Sulphate concentration exceeded the EQS of 400 mg/l on three out of the total thirteen samples tested. These were exceeded on NM/WS5 at 1700 mg/l, NM/BH-01 at 0.85-0.95 m depth at 802 mg/l and NMBH-01 at 2.6-2.7 m depth at 582 mg/l and NMWS-04 at 336 mg/l (Entec). These isolated concentrations are not believed to pose a significant risk to controlled waters.

Sulphide concentrations exceeded the EQS of 0.25 µg/l on two occasions during the Entec investigation at NM/WS5 at 700 µg/l and NM/BH-01 at 0.85-0.95 m depth at 300 µg/l. The Soil Mechanics investigation showed at the three locations tested at between 50 to 3100 µg/l. These exceedances are significantly greater than the EQS however represent isolated concentrations at locations with the potential to leach sulphide. These hotspots are therefore not considered to present a significant risk to controlled waters.

Total Cyanide concentrations from the Entec investigation ranged from <0.01-10.0 mg/l (*n*=13). The EQS of 0.001 mg/l was therefore exceeded at all of the locations due to the LOD (<0.014 mg/l) being exceeded. Concentration greater than the LOD and therefore significantly greater than the EQS were encountered at TP3/07 at 10.0 mg/l.

pH was recorded at 12.1 at TP3/07 exceeding the upper limit of the EQS pH 9.0. The further twelve samples analysed all fell within the EQS limits of 6.0-9.0.

Organics

The data showed that the EQS for Total Phenols (30 μg/l) was exceeded on one occasion TP3/07 (224.90 μg/l) from a total of eight samples ranging from <0.5–224.9 μg/l. Location NM/WS5 between 0.9 m and 1.25 m depth showed concentrations of total PAHs which were greater than UKDWS for PAH (0.01 μg/l) and the EQS limit for fluoranthene (0.02 μg/l). In addition concentrations of acenaphtylene, acenaphthene, fluorene, phananthrene and anthracene were greater than the LOD, however there are no EQS values for comparison. Since the elevated concentrations were an isolated occurrence no threat to controlled waters is perceived.

Section Conclusion

In conclusion, the **risks to controlled waters from inorganic and organic determinands are considered to be low to moderate.** However, given the distance of the Moston Brook (55 m) from the Site and the isolated (hotspot) nature of the contamination.

For the site in its current condition, it is considered that no further assessment of the ground water is necessary, however, for planning purposes, it may be deemed necessary to undertake more complex geochemical fate and transport modelling for the potential limited risks to the Moston Brook as well as water monitoring of the river from both upstream and downstream areas.

The underlying Major Aquifer was not penetrated during the site investigations. BH4A/07 was the deepest exploratory hole in both the Entec and Soil Mechanics investigations and the Collyhurst sandstone was not encountered. Table 8.1 indicates a depth in excess of 26.75 m of Glacial Till prior to reaching the sandstone aquifer. From the borehole logs it can be noted that the majority of the Glacial till deposit is clay therefore preventing a direct pathway between the made ground and the underlying sandstone aquifer.

11. GROUND GAS RISK ASSESSMENT

11.1 Approach to Assessment

The generation or migration of ground gases from man-made or natural sources can pose a major hazard to buildings or other structures if the gases are able to accumulate within. In terms of the proposed development, the main risks are that ground gases may accumulate in confined spaces, such as excavated trenches, in closed drainage systems, basements or under pavements. Made Ground which are capable of generating ground gases, could affect the development in its current condition.

In order to determine whether gas generation is occurring at a significant rate, borehole gas flow rate results (calculated from the gas concentration readings and flow rates) have been compared to guidance values given in CIRIA Report C659, 2006.

Entec monitored seven monitoring wells on two occasions between 04/05/2006 and 15/05/2006 in their June 2006 report (Appendix A).

Soil Mechanics monitored nine monitoring wells on five occasions between 02/05/2007 and 04/06/2007 (Appendix B).

11.2 Ground Gas Monitoring Results

Entec did not detect any methane in any of the monitoring wells on the first monitoring visit and not at all from four of the monitoring locations. However, levels of 0.1% (by volume) were recorded in NM/WS4, NM/WS5 and NM/WS6 on the second visit. Carbon dioxide was detected in five of the seven monitoring wells. Levels were recorded at between 0.1 and 1.3% (by volume), the maximum was recorded in monitoring location NM/WS6. Flows were recorded in six of the seven monitoring wells, with a maximum of 5 l/hr recorded in NM/BH1.

The Soil Mechanics (2007) monitoring visits recorded measurable concentrations of carbon dioxide in eight of the nine boreholes monitored up to a maximum concentration of 5.9% (WS2/07). The results show that concentrations of methane and carbon monoxide were not detected at any location above the detection limit of the analyser at

any time during the monitoring period. Hydrogen sulphide was only detected once, 1 ppm at WS1/07 on 02/05/07. The flow rates recorded at all locations are low (between 0.00 and 0.30 l/hr) throughout the monitoring period.

A summary of the gas concentrations recorded by Soil Mechanics are shown in Table 11.1 (below).

Table 11.1: maximum detected gas concentration and flowrate for each borehole

Borehole	Atmospheric Pressure Range	Borehole Flowrate	Maximum Detected Concentrations			
			Carbon Dioxide	Methane	Carbon Monoxide	Hydrogen Sulphide
	mbar	l/hr	% v/v	% v/v	ppm	ppm
BH1A/07	998-1017	0.00	2.4	ND	ND	ND
BH2/07	998-1018	0.00-0.30	2	ND	ND	ND
BH3/07	999-1017	0.00	ND	ND	ND	ND
BH4A/07	998-1017	0.00-0.20	2.2	ND	ND	ND
WS1/07	999-1017	0.00-0.10	1.7	ND	ND	1
WS2/07	999-1017	0.00	5.9	ND	ND	ND
WS3/07	999-1016	0.00	4.5	ND	ND	ND
WS4/07	999-1017	0.00	4.9	ND	ND	ND
WS8/07	998-1017	0.00	5	ND	ND	ND

ND – None Detected
Note – atmospheric pressures for individual monitoring visits are included in the Soil Mechanics Factual Report (2007)

Based upon the worst case scenario from both the Entec and Soil Mechanics data for measured methane, carbon dioxide and flow rate, the following **gas screening values (GSV)** have been determined:

- Methane = 0.1%/100 X 5.0 l/hr = 0.005
- Carbon dioxide = 5.9%/100 X 5.0 l/hr = 0.295

11.3 Classification of Gas Regime

The combination of gas concentrations and the borehole flow rates (taken from the maximum levels for a conservative assessment) have been used to derive GSV for the

site as detailed in CIRIA report C665 for the gases methane and carbon dioxide. The maximum calculated GSV is for carbon dioxide at 0.295 l/hr.

The GSV is compared to table 8.5 from the CIRIA report C665 (Appendix H) to classify the site as a Characteristic Situation (CS) between 1 (very low risk classification) and 6 (very high-risk classification).

The GSV for carbon dioxide would classify the site as CS2 (low risk).

11.4 Gas Risk Mitigation Measures

Based on the concentrations and flow rates of the gases recorded during the monitoring of the Reliance Street site, the site can be classed as a **CS 2**. Typically for CS 2 a number of protection measures are required for a new commercial / industrial development. These measures are included in Table 11.2.

Table 11.2 – Scope of Protection Measures for New Development (CS2)

Commercial / Industrial Development
1) Reinforced concrete cast *in-situ* floor slab (suspended, non-suspended or raft) with at least 1200g DPM.
2) Beam and block or pre-cast concrete and 2000g DPM / reinforced gas membrane.
3) Possibly underfloor venting or pressurisation in combination with 1) and 2) depending on use.
4) All joints and penetrations sealed.

Reproduced from CIRIA C665

The monitoring undertaken to date has obtained seven sets of readings over two periods totalling approximately six weeks with at least one set of readings obtained during periods of low / falling pressure. Ambient pressure is not recorded by Entec. The CIRIA C665 guidance suggests that for low sensitivity receptors (e.g. commercial developments) in areas that have a low generation potential (considered appropriate for the site) then an idealised minimum frequency would be a minimum of 6 readings over a

period of 2 months, with at least two sets of reading being at low or falling pressure (<1000mBar). Thus the monitoring to date complies with current best practice.

The site in its current condition is considered to be low sensitivity and the gas regime demonstrated above can be classified as **low risk**. Therefore, no remedial measures are considered necessary for the site in its current condition.

The risk of the site causing off-site ground gas issues due to migration away from the site is considered negligible as no methane has been recorded and only low levels of carbon dioxide have been recorded at low flow rates which is consistent with the made ground identified on-site.

12. REVISED RISK ASSESSMENT

12.1 Introduction

All of the ground investigation data available has been used to refine the preliminary conceptual site model which was developed and which was presented in Section 5 of this report.

A refined conceptual model is presented in the following paragraphs.

On Site Sources of Contamination

Some slightly elevated concentrations of contaminants have been identified, which are summarised below. It should be borne in mind however that the inherent heterogeneity of made ground due to uncertainties in the source of material infers that hotspots of contamination not encountered may none the less present a significant risk.

Soil

- Alpihatic hydrocarbons C8-C10 within TP5/07 at 1 m depth at 91.9 mg/kg.
- Benzo(a)pyrene within TP5/07 at 1 m at 34.43 mg/kg and within BH5/07 at 5 m at 67.78 mg/kg.
- Hexachlorobutadiene potentially site wide but particularly within TP5/07 at 1.0 m at <34.0 mg/kg.
- Lead within TP3/07 at 3.6 m at 1249.4 mg/kg.

Groundwater

- Ammoniacal nitrogen within NM/WS4 at 32.3 mg/l, BH02/07 at 3.5 mg/l and BH4A/07 at 2.2 mg/l
- Sulphate within BH02/07 at 1720 mg/l and BH4A/07 at 1870 mg/l
- Total cyanide within BH02/07 at 1.29 mg/l and BH4A/07 at 1.36 mg/l
- Sulphide within BH02/07 at 3.1 mg/l and BH4A/07 at 0.5 mg/l
- Copper (440 µg/l), nickel (270 µg/l) and zinc (950 µg/l) at BH4A/07 above the EQS.

- Polyaromatic hydrocarbons at BH1A/07 (7 µg/l), BH2/07 (40 µg/l) and BH4A/07 (4.2 µg/l) above the UKDWS.
- Petroleum hydrocarbons at BH04A/07 above limits of detection for aromatics C10-12 (24.5 µg/l), aromatics C12-16 (33.9 µg/l), aromatics C16-21 (18.5 µg/l) and aliphatic and aromatic C21-35 (18.2 µg/l and 30.4 µg/l respectively) and at BH02/07 for aromatics C16-21 (11 µg/l) and aliphatic and aromatic C21-35 (44.6 µg/l and 52.4 µg/l respectively).

Leachate

- Ammoniacal nitrogen within NM/WS5 at 1.7 mg/l, NM/BH-01 at 0.9 mg/l and TP3/07 at 0.6 mg/l
- Sulphate within NM/WS5 at 1700 mg/l, NM/BH-01 at 802 mg/l and NMBH-01 at 582 mg/l
- Sulphide within NM/WS5 at 0.7 mg/l and NM/BH-01 at 0.85-0.95 m depth at 0.3 mg/l
- Total cyanide within TP3/07 at 10.0 mg/l
- Total phenols within TP3/07 at 0.2249 mg/l
- Fluoranthene and other PAH within NM/WS5 between 0.9 m and 1.25 m depth

Off-Site Contamination Sources

The OS historical mapping contained within Appendix C identified other potential off-site contamination sources including:

- Former mill ponds located approximately 100 m north of the site;
- Former refuse heaps located approximately 25 m northeast of the site;
- Former Landfill site located approximately 214 m northwest of the site;
- Current scrap yard located to the east, adjacent to the site;
- Potential for ground water contamination transported from an off-site source.

Pathways

Potential pathways for the site have been identified as follows:

- dermal contact;
- inhalation;
- ingestion;
- plant root uptake;
- leaching of contaminants; and,
- generation and migration of ground gases.

Receptors

The following sensitive receptors have been identified:

- Human Health – Current site users and maintenance staff;
- Present structures – Building foundations and services;
- Present landscaped areas – flora and fauna;
- Controlled Waters – Surface – Moston Brook c.55 m;
- Controlled Waters – Ground – Major Aquifer (Collyhurst Sandstone); and
- Controlled Waters – Ground – Minor Aquifer in glacial deposits and made ground.

Table 12.1 Potential Pollutant Linkages

Source	Pathway	Receptor
On-site sources		
Soils: Lead, benzo(a)pyrene, hexachlorobutadiene and aliphatic hydrocarbons C8-C10 have been recorded at elevated levels at the site. Isolated hotspots of contamination may be present within the Made Ground at the site that have not been identified	Dermal Contact	Human Health, soft landscaping
	Ingestion	
	Inhalation	
	Plant root uptake	Flora
	Direct contact	Building infrastructure, soft landscaping
	Leaching	Groundwater (in made ground, glacial till and Collyhurst Sandstone); Surface water (Moston Brook).
Leachates / Ground Water: Ammoniacal nitrogen, sulphate, sulphide, total cyanide, copper, nickel, zinc, petroleum and polyaromatic hydrocarbons (PAH) in the ground waters. Ammoniacal nitrogen, sulphate, sulphide, total cyanide, total phenols and PAH in the leachates have been recorded at elevated levels at the site. Isolated hotspots of contamination may be present within leachates in the made ground at the site that have not been identified.	Dermal Contact	Human Health, soft landscaping
	Ingestion	
	Inhalation	
	Plant root uptake	Flora
	Direct contact	Building infrastructure; soft landscaping
	Leaching	Groundwater (in made ground, glacial till and Collyhurst sandstone); Surface water (Moston Brook).
Ground gas: Elevated carbon dioxide generated within the on-site made ground.	Asphyxiation	Human Health
Off-site sources		
Ground Gas: The possibility of ground gas from off-site affecting the site cannot be discounted.	Asphyxiation	Human Health
	Explosion	Buildings/structures Human Health
Leachates / Ground Water: The possibility of contaminated leachates and ground water from off-site affecting the site cannot be discounted.	Direct contact	Building infrastructure, soft landscaping
	Leaching	Groundwater (in made ground, glacial till and Collyhurst sandstone); Surface water (Moston Brook).

Assessment of Pollutant Linkages

The potential pollutant linkages associated with the site are identified above. For each of the pollutant linkages, an estimate is made of:

- The potential severity of the risk;
- The likelihood of the risk occurring.

The criteria used for assessment are broadly based on those presented in Section 6.3 of the CIRIA Report "Contaminated Land Risk Assessment: A Guide to Good Practice" (CIRIA Report C552). The severity of the risk is classified according to the criteria in Table 12.2 below.

Table 12.2 - Severity of Risk

Severe	Acute (short term) risks to human health likely to result in "significant harm" (e.g. very high concentrations of contaminants/ground gases). Catastrophic damage to buildings/property (e.g. by explosion, sites with high gassing potential, extensive VOC contamination). Major pollution of controlled waters (e.g. surface watercourses or major aquifers/source protection zones).
Medium	Chronic (long-term) risks to human health likely to result in "significant harm" (e.g. elevated concentration of contaminants/ground gases). Pollution of sensitive controlled waters (e.g. surface watercourses or major/minor aquifers). Significant effects on sensitive ecosystems or species (e.g. death of species in designated nature reserve).
Mild	Pollution of non-sensitive waters (e.g. smaller surface watercourses or non-aquifers). Significant damage to buildings or structures (e.g. by explosion, sites with medium gassing potential, elevated concentrations of contaminants).
Minor	Requirement for protective equipment during Site works to mitigate health effects. Damage to non-sensitive ecosystems or species (e.g. loss of plants in landscaping scheme). Minor damage to buildings or structures (e.g. by explosion, sites with low gassing potential).

The probability of the risk occurring is classified according to criteria given in Table 12.3 below.

Table 12.3 - Probability of Risk Occurring

High likelihood	Pollutant linkage may be present, and risk is almost certain to occur in the long term, or there is evidence of harm to the receptor
Likely	Pollutant linkage may be present, and it is probable that the risk will occur over the long term.
Low likelihood	Pollutant linkage may be present and there is a possibility of the risk occurring, although there is no certainty that it will do so.
Unlikely	Pollutant linkage may be present but the circumstances under which harm would occur are improbable.

An overall evaluation of the level of risk is gained from a comparison of the severity and probability, as shown in Table 12.4 below.

Table 12.4 - Comparison of Severity and Probability

		Severity			
		Severe	**Medium**	**Mild**	**Minor**
Probability	**High likelihood**	Very High Risk	High Risk	Moderate Risk	Moderate/Low Risk
	Likely	High Risk	Moderate Risk	Moderate/Low Risk	Low Risk
	Low likelihood	Moderate Risk	Moderate/Low Risk	Low Risk	Very Low Risk
	Unlikely	Moderate/Low Risk	Low Risk	Very Low Risk	Very Low Risk

An evaluation of the environmental risks associated with the site are presented in Tables 12.5 (on-site) and discussed below. The evaluation is based on the site in its current condition as commercial/industrial land use. The majority of identified risks for the site in its current condition are considered to be **low** based on the available information, with the exception of the risks to controlled waters which are considered to have a **moderate/low** risk.

Table 12.5 Summary of Environmental Risks.

Source	Pathway	Target	Potential Severity	Likelihood of occurrence	Level of Risk	Comments
On-site sources						
Soils: Lead, benzo(a)pyrene, hexachlorobutadiene and aliphatic hydrocarbons C8-C10 have been recorded at elevated levels at the site. Isolated hotspots of contamination may be present within the Made Ground at the site that have not been identified	Dermal Contact	Human Health, soft landscaping	Minor	Low	Very low risk	Risks are associated with occupiers of the current commercial / industrial development. Risk rating assumes presence of hard cover on the development and possible users to the open space to the north of the site. Site workers should wear the appropriate personal protective equipment to mitigate any risk from direct contact with any potential contaminated soils.
	Ingestion		Minor	Low	Very low risk	
	Inhalation		Minor	Low	Very low risk	
	Plant root uptake	Flora	Minor	Unlikely	Very low risk	The site investigation and analysis has not recorded elevated concentrations of phytotoxic contaminants such as copper and zinc within the Made Ground. In addition, plant cover and open space at the site is minimal.
	Direct contact	Building infrastructure, soft landscaping	Minor	Unlikely	Very low risk	None
Leachates / Ground Water:	Dermal Contact	Human Health, Soft	Minor	Unlikely	Very low risk	Risks are

Source	Pathway	Target	Potential Severity	Likelihood of occurrence	Level of Risk	Comments
On-site sources						
Ammoniacal nitrogen, sulphate, sulphide, total cyanide, copper, nickel, zinc, petroleum and polyaromatic hydrocarbons (PAH) in the ground waters. Ammoniacal nitrogen, sulphate, sulphide, total cyanide, total phenols and PAH in the leachates have been recorded at elevated levels at the site. Isolated hotspots of contamination may be present within leachates in the made ground at the site that have not been identified.	Ingestion	landscaping	Minor	Unlikely	Very low risk	associated with occupiers of the proposed commercial / industrial development. Risk rating assumes presence of hard cover on the development. In addition, plant cover and open space at the site in minimal Site workers should wear the appropriate personal protective equipment to mitigate any risk from direct contact with any potential leachates.
	Inhalation		Minor	Unlikely	Very low risk	
	Plant root uptake	Flora	Mild	Low Likelihood	Low risk	Risks from contaminants in its current condition are considered to be low.
	Direct contact	Building infrastructure. Soft landscaping	Mild	Low Likelihood	Low risk	Risks from contaminants in its current condition are considered to be low
Leachates /Ground Water (continued)	Leaching	Ground water, Surface Water (Moston Brook)	Medium	Low	Moderate/ Low risk	Although there are some exceedances of the EQS, the Glacial Till is likely to be acting as an aquitard and therefore is likely to be limiting the pathway to contaminate the underlying Major Aquifer. The surface water receptor (Moston Brook, 55 m), may be at a moderate/low risk due to the proximity to the site.

Source	Pathway	Target	Potential Severity	Likelihood of occurrence	Level of Risk	Comments
On-site sources						
Ground gas: Elevated carbon dioxide generated within the on-site made ground.	Asphyixiation	Human Health	Minor	Low	Very low risk	Risk from ground gases in its current condition are considered to be negligible

Summary of Identified Risks

On the basis of the information obtained for this assessment, potentially significant risks to human health and controlled waters in the context of the current baseline conditions have not been identified.

Human health risks to current site users and maintenance workers should not be significant since hardstanding is likely to be present and the use of appropriate health and safety equipment by maintenance workers will minimise direct contact and the inhalation of vapours.

Risks to controlled waters have been assessed as moderate/low since detectable levels of contaminants were encountered in both the groundwaters and leachates. The Moston Brook is therefore considered to be at moderate/low risk.

Since low risks associated with ground gases have been identified no further action is considered necessary.

13. CONCLUSIONS AND RECOMMENDATIONS

The previous ground investigations carried out by both Entec (2006) and Soil Mechanics (2007) have demonstrated similar ground conditions across the site, which generally comprise Made Ground of variable thickness over natural glacial deposits. Bedrock was not encountered during either investigation, however, geological maps indicate the Collyhurst Sandstone is present. Ground water was encountered at variable depth both during the fieldwork and upon monitoring.

Based upon the results obtained for soil analysis, it is considered that metals, metalloid, inorganic and organic determinands pose low to moderate risk to current site users based upon reference to the SGV and GAC for commercial/industrial land use. This assessment is based upon the isolated hotspot of Aliphatic hydrocarbons C8-C10, hexachlorobutadiene and benzo(a)pyrene at TP5/07 1.0 m bgl.

Asbestos fibres were not detected in any of the soil samples analysed.

Human health risks to current site users and maintenance workers should not be significant since hardstanding is present on the majority of the site. The use of appropriate health and safety equipment by maintenance workers will minimise direct contact and inhalation of any potential contaminant vapours.

Leachate tests carried out on selected soil samples demonstrated that compared with EQS there were exceedances of ammoniacal nitrogen, sulphate, sulphide, total cyanide and total phenols and PAH levels were above the UKDWS.

There were likewise EQS exceedances of ammoniacal nitrogen, copper, nickel, zinc, petroleum, sulphate, total cyanide and sulphide and UKDWS exceedances of polyaromatic hydrocarbons in the groundwater within the Made Ground and Glacial till. The elevated contaminants are not considered to pose significant risk to the deep aquifer within the Collyhurst Sandstone due to the thickness of Glacial Till above it. The site is not located within a source protection zone and there are no ground water abstraction points within close vicinity of the site.

Therefore, for the purposes of the current condition of the site no further action is considered necessary, however, for planning purposes, it may be prudent to

undertake more complex geochemical fate and transport modelling for the potential limited risks to the Moston Brook as well as water monitoring of the river from both upstream and downstream areas.

In terms of ground gases, the site in its current condition is considered to be low sensitivity and the gas regime demonstrated above can be classified CS2, as low risk. Although no remedial measures are necessary for the site in its current condition, basic gas protection measures will be required on any new developments.

There may be a ground gas risk from off-site sources which include a registered landfill site within 250 m of the site and a former refuse site located within 25 m of the site. Although it is considered the migration of gas from off-site sources onto the site is to be a low to negligible risk.

Overall, on the basis of the information obtained for this assessment, **potentially significant risks have not been identified**, relating to the baseline condition of the site in its current state.

14. REFERENCES

BGS 1:50,000 scale map, Sheet 85 (Manchester), Solid and Drift Edition.

BGS 1:10,560 (6" to 1 mile) Geological sheets (Solid) 85 Manchester.

British Standard 10175, Investigation of potentially contaminated sites – Code of Practice, 2001

BS5930 Code of Practise for Site Investigation 1999

Chartered Institute of Environmental Health / Land Quality Management Ltd: Generic Assessment Criteria for Human Health Risk Assessment, 2007

CIRIA Report "Contaminated Land Risk Assessment: A Guide to Good Practice" (CIRIA Report C552), 2001.

CIRIA Report 659: Assessing risks posed by hazardous ground gases to buildings, 2006

CIRIA Special Publication 32 Construction Over Abandoned Mine Workings, 1984

Coal Authority Mining Report, February 2007.

DEFRA & Environment Agency - Assessment of Risks to Human Health from Land Contamination: An Overview of the Development of Soil Guideline Values & Related Research, R & D Publication CLR 7, 2002

DEFRA & Environment Agency – Potential Contaminants for the Assessment of Land, R & D Publication CLR 8, 2002

DEFRA & Environment Agency – The Contaminated Land Exposure Assessment (CLEA) Model: Technical Basis and Algorithms, R & D Publication CLR 10, 2002

DEFRA & Environment Agency - Model procedures for the management of land contamination, R & D Publication CLR 11, 2004

Entec UK Limited, June 2006 for Greater Manchester Waste Authority – Phase 2 Due Diligence Audit – North Manchester MRF and HWRC. Draft report.

Environment Agency's Policy and Practice for the Protection of Groundwater Resources, 1998

Environment Agency's Policy and Practice for the Protection of Groundwater Resources Groundwater Vulnerability Map Sheet 11, South Pennines, 1996

Environment Act 1995

Environmental Quality Standard (EQS) (for the protection of freshwater fish, alkalinity adjusted where applicable), 2004

Environmental Protection Act 1990

Envirocheck Report, Landmark Information Group, September 2005

Soil Mechanics, Factual Report on Ground Investigation, August 2007.

The Protection of Water Against Agricultural Nitrate Pollution (England and Wales) Regulations, 1996

The Surface Waters (Fishlife) (Classification) Regulations 1997

Water Act 2003

15. LIMITATIONS ON REPORT

This section should be read before reliance is placed on any of the opinions, advice, recommendations or conclusions set out in this report

1 The advice, opinions, recommendations and conclusions contained in this report are subject to the limitations and exclusions set out in Scott Wilson Ltd's (Scott Wilson) appointment contract offer letter to Costain Limited dated 21 February 2008 reference RBE/VAH.

2 It is possible that there is other documentation concerning the site that Scott Wilson has not known of or managed to obtain.

3 The opinions presented in this report are based also on observations made during site visits. At the time of these inspections, it is possible that certain indications of ground contamination were latent or otherwise not visible. The opinions expressed can only be based on what was visible at the time the visit was conducted.

4 All work carried out in preparing this report has utilised and is based on Scott Wilson's professional knowledge and understanding of the current (October 2007) relevant English and European Community:

- Standards and codes
- Technology
- Legislation

Changes in the above may cause the opinions, advice, recommendations or conclusions set out in this report to become inappropriate or incorrect. However, following delivery of this report, Scott Wilson is not obliged to advise the persons who are entitled to rely on this report of any such changes, or of their repercussions.

FIGURES

Scott Wilson Ltd 3 Pemberton House, Stafford Court, Stafford Park, Telford, TF3 3AP United Kingdom
T +44 (0)1952 235 600 **F** +44 (0)1952 235 650
www.scottwilson.com

Costain Limited
2nd Floor Raynham House
2 Capitol Close
Capitol Park West
LEEDS LS27 0WH

Our Ref: RBE/VAH

Your Ref:

Date: 21st February 2008

For the attention of Mr Craig Eames

Dear Sirs

Greater Manchester Waste PFI Project
Geo-Environmental Baseline Survey Reports

We write to confirm that in connection with the Manchester Waste PFI Project (the "Project") Costain Limited has instructed Scott Wilson Ltd to prepare Geo-Environmental Baseline Survey Reports (the "Reports") for the Project sites (the"Sites"):

We have been informed by yourselves that Costain Limited have been (or will be) formally contracted by the Greater Manchester Waste Disposal Authority (GMWDA) to procure the preparation of the Reports which are then to be used by GMWDA and their intended PFI service provider Viridor-Laing SPV (VL SPV)) only for the purpose of the operation of the environmental handback provisions which are to form part of the proposed PFI project agreement between GMWDA and VL SPV. In this regard the reports are required to provide a record of the general baseline contaminative conditions of each of the Sites prior to the commencement of development pursuant to the project agreement. Scott Wilson Ltd accepts no liability for the use of the Reports other than for this purpose.

The services we have and are providing in order to undertake the preparation of the Reports, together with a record of the information provided by Costain Limited and others that we have needed to rely on to do this, are set out in Schedule 1 to this letter. For the avoidance of doubt, in using information provided by Costain Limited and others, Scott Wilson Ltd does not accept any liability for the accuracy of such information or any deficiencies therein.

As agreed with Costain Limited our fees for these services will be on a time charge basis at the hourly rates set out in Schedule 2 to this letter. We propose to invoice our fees on a monthly basis in arrears. All fees will be subject to the addition of VAT.

This letter and the enclosed attachments constitute our formal offer to carry out the preparation of the Reports for the Sites.

/Continued....

Scott Wilson Ltd - Part of the worldwide Scott Wilson consultancy group
Registered in England: No 880328 **Registered Office:** Scott House, Alençon Link, Basingstoke, Hampshire, RG21 7PP United Kingdom

Our offer is subject to the attached Scott Wilson Ltd Terms of Business dated 1 March 2006 as amended on the Acceptance Sheet attached to this letter. We recommend that you should read the Terms of Business as they impose a number of important limitations exclusions and indemnities.

We thank you for your instructions and trust we have correctly understood them and request that you confirm this by having a duly authorised representative of Costain Limited complete and return the attached Acceptance Sheet.

Yours faithfully
for Scott Wilson Ltd

RB Edwards
Commercial Director
UK Central Division

cc David Platt
Niels Christiansen
Mark Thorn
Danny Hope
Paul Thompson
Mark Sherwood

email: roger.edwards@scottwilson.com

ACCEPTANCE SHEET

PROJECT INFORMATION

Project name/location: **Greater Manchester Waste PFI Project**
Geo-Environmental Baseline Survey Reports

Offer reference/date: Letter Scott Wilson Ltd to Costain Limited dated 21 February 2008 ref RBE/VAH

Client: **Costain Limited**

Client Address/Contact: 2nd Floor
Raynham House
2 Capitol Close
Capitol Park West
Leeds
LS27 0WH

Mr Craig Eames

SPECIFIC AMENDMENTS TO SCOTT WILSON LTD TERMS OF BUSINESS (1 MARCH 2006 VERSION)

Scott Wilson Ltd Terms of Business (1 March 2006 version) are amended as follows:

(1) Clause 9 Pollution, Contamination & Asbestos is deleted.

(2) Replace clause 5.2 with the following:

The Client, the Greater Manchester Waste Disposal Authority and their intended PFI service provider Viridor-Laing SPV shall have a licence to copy and use the final reports which are the subject of the Offer but only for the purpose set out in the Offer. The Consultant shall not be liable for the use of such reports for any other purpose. The Consultant may, on giving not less than seven days notice, revoke this licence if the Client fails to pay in accordance with this Agreement any fees or other amounts due under this Agreement.

(3) Replace clause 5.3 with the following:

The Client may provide copies of the reports which are the subject of the Offer to the Greater Manchester Waste Disposal Authority and their intended PFI service provider Viridor-Laing SPV but only for the purpose set out in the Offer. The Client shall not without the Consultant's prior written agreement provide to any other third party or publish on any website the whole or any part of any drawing report or other document prepared by the Consultant in the performance of this Agreement.

ACCEPTANCE

The above offer, including the Scott Wilson Ltd Terms of Business (1 March 2006 version) (as amended above), is accepted for and on behalf of the Client.

Signed: .....

Name: MARK HUDDART

Position: REGIONAL DIRECTOR

Date: 17 APRIL 2008

Greater Manchester Waste PFI Project

Geo-Environmental Baseline Survey Reports

Schedule 1 to Offer Letter dated 21 February 2008

The services to be provided for each of the Sites for which the Reports are to be prepared shall comprise:

1. To receive details from Costain Limited of desk studies and due diligence reports carried out by Entec Ltd on behalf of the Greater Manchester Waste Disposal Authority.
2. To design a physical site contamination investigation for the purposes of establishing general site contamination levels within site soils, the existence or otherwise of ground gases and the levels of contamination, if any, in ground waters, all in accordance with the recommendations of BS10175:2001[1] and BS5930:1999[2], such physical site contamination investigation to be designed to be carried out as supplementary work to and within the time constraints of an ongoing physical geotechnical site investigation arranged by Costain Limited.
3. To supply details of the required physical site contamination investigation to Costain Limited in order for Costain Limited to procure the work.
4. To receive details from Costain Limited (or their appointed subcontractors) of the factual output from the physical site contamination investigation works in order to provide information for the design of a programme of laboratory testing and eventually in the form of a factual report.
5. To design a laboratory testing programme to assess contaminated soils, ground gas and ground waters based on the factual output from the physical site contamination investigation works.
6. To advise Costain Limited of the required contamination laboratory testing programme.
7. To receive results from the soils, gas and ground waters laboratory testing programme in the form of a factual report from Costain Limited (or their appointed sub-contractors).
8. To provide an interpretive baseline report on the existing general contaminative condition of the site based on the factual outputs from the physical site contamination investigation works and the soils, gas and ground waters laboratory testing programme and prepared in accordance with UK current practice contained within CLR 11[3].

[1]British Standard 10175, Investigation of potentially contaminated sites – Code of Practice, 2001.
[2]British Standard 5930, Code of Practice for Site Investigation, 1999.
[3]CLR 11, DEFRA & Environment Agency - Model procedures for the management of land contamination, 2004.

Whilst Scott Wilson Ltd has used reasonable skill and care in the design of the physical site contamination investigations it cannot guarantee that there will not be higher levels of contamination existing on the sites in locations different from those designed to be sampled as part of the physical investigation works.

In undertaking the services, Scott Wilson Ltd has relied upon the following information supplied by Costain Limited and third parties:-

1. The factual outputs from physical site contamination investigation works and the soils, gas and ground waters laboratory testing programme for the Sites procured by Costain Limited and undertaken by Costain Limited and its sub-contractors Ian Farmer Associates, Soil Mechanics and Geotechnics.

/Continued…

2. The following reports prepared by third parties:-

a) Entec, Phase 1 & 2 Due Diligence Audit reports for the Sites variously dated 2006.

and such other information as may have been or may be supplied by Costain Limited and/or third parties and used by Scott Wilson Ltd in the preparation of the Reports.

.

TERMS OF BUSINESS

SCOTT WILSON LTD

1 **DEFINITIONS**

In this Agreement:-
"Offer" means the offer letter(s) and all of its appendices and/or attachments (if any) issued by the Consultant to the Client.
"Agreement" means the Offer and these Terms of Business 'and the Client's acceptance thereof'.
"Client" means the person to whom the Consultant sends the Offer provided that where such person acts as an agent, the Client shall be the principal.
"Consultant" means Scott Wilson Ltd (Company No 880328).
"Services" means all the work and services (including advice provided whether or not in writing) carried out or to be carried out for the Client by the Consultant.

2 PERFORMANCE

2.1 The Consultant shall exercise reasonable skill care and diligence in performing the Services. Notwithstanding any responsibilities and obligations which the Client may have under any other contract or at law, nothing in this Agreement or in any proposal, report or other document is to be construed as a warranty or guarantee by the Consultant other than to use (or to have used) reasonable skill care and diligence.

2.2 The Consultant shall use all reasonable endeavours to perform the Services to the programme, if any, set out in the Agreement but shall not be liable if it is unable to perform the Services as a result of any cause beyond its reasonable control.

2.3 The Client shall supply to the Consultant in a timely fashion so as not to disrupt the performance of the Services and without charge all the information and things in the possession of the Client or any of the Client's agents consultants or contractors and any instructions decisions consents approval or access to property and use of facilities as described in (or reasonably to be inferred from) this Agreement as necessary for the performance of the Services by the Consultant.

3 PAYMENT

The Client shall pay the Consultant the fees set out in the Agreement. Interim invoices, if any, and the final invoice shall become due for payment on the date of the submission of the Consultant's invoice therefor and the final date for payment shall be 21 days thereafter. The Client may not withhold any payment after the final date for payment of any sum due under this Agreement unless he gives not later than 14 days before such final date a notice specifying the amount proposed to be withheld and the ground for withholding payment or if there is more than one ground, each ground and the amount attributable to it. The Client shall pay interest on all amounts remaining unpaid after the final date for payment at the statutory rate pursuant to the Late Payment of Commercial Debts (Interest) Act 1998. The Client shall pay all debt collection fees (including legal fees) and costs whatsoever incurred by the Consultant in collecting the fees. All sums due under this Agreement are exclusive of Value Added Tax, the amount of which shall be paid by the Client to the Consultant at the rate and in the manner prescribed by law.

4 **ADDITIONAL WORK**

If the Consultant is instructed by or on behalf of the Client to carry out additional work to that stated in the Offer or such work is necessary in the circumstances and/ or suffers delay or disruption in the performance of the Services for reasons beyond the Consultant's reasonable control the Client shall make additional payment to the Consultant in respect of the additional work carried out and the additional resources employed and/ or the delay or disruption suffered. The additional payment shall be calculated on the basis of the method of assessing payment under the Agreement, or where no such method is set out in the Agreement, payment shall be such sum as is reasonable in the circumstance.

5 **INTELLECTUAL PROPERTY, CONFIDENTIALITY & PUBLICITY**

5.1 The copyright in all drawings reports and other documents (including material in electronic form) prepared by the Consultant in the performance of this Agreement shall remain vested in the Consultant. Any of the Consultant's know-how, techniques, or processes used in the course of carrying out the Services are confidential to the Consultant. The Client shall not without the prior written consent of the Consultant divulge to any party details of any confidential information disclosed by the Consultant in the performance of the Services.

5.2 The Client shall have a licence to copy and use only the final drawings and other documents provided by the Consultant, and only for the purposes and for the same project for which they were prepared or compiled. The Consultant shall not be liable for the use of such drawings or documents other than for the purposes for which they were provided by the Consultant. The Consultant may on giving not less than seven days written notice revoke this licence if the Client fails to pay in accordance with this Agreement any fees or other amounts due under this Agreement.

5.3 The Client shall not without the Consultant's prior written agreement provide to any third party or publish on any website the whole or any part any drawing report or other document prepared by the Consultant in the performance of this Agreement.

5.4 The Consultant may reproduce for reasonable publicity purposes any photographs taken and drawings prepared by it in the performance of the Services. The Client will consult with the Consultant when issuing publicity which concerns the Services. The Consultant shall not use any information that the Client has stated in writing to be confidential.

6 **THE CONSULTANT'S LIABILITY**

6.1 Notwithstanding anything to the contrary in this Agreement the total liability of the Consultant (other than for personal injury or death resulting from negligence) under or in connection with this Agreement howsoever arising whether in contract or in tort, in negligence, for breach of statutory duty or otherwise shall be limited to and not exceed in aggregate £100,000 or ten times the total fee due under this Agreement whichever is the greater.

6.2 Subject to the foregoing clause which may operate to extinguish or reduce the liability of the Consultant under this clause the Consultant's liability under or in connection with this Agreement in respect of any claim or series of

© Scott Wilson

claims arising out of one occurrence or series of occurrences whether in contract or in tort, in negligence, for breach of statutory duty or otherwise shall be limited to the least of the following amounts:

(i) the greater of (a) the reasonable direct cost incurred by the Client to carry out corrective works of demolition reconstruction and repair of physical damage or clean-up works directly resulting from defective performance of the Services (excluding for the avoidance of doubt any of the following losses incurred by the Client whether direct or indirect: lost profits, wasted management time, cost of delay, increased supervision costs, professional fees, contractor and other third party costs and claims, diminution in value, financing charges, or financial loss) together with the Consultant's fee for performing the defective part or parts of the Services; and (b) five times the Consultant's fee for performing the defective part or parts of the Services;

(ii) the amount if any recoverable by the Consultant by way of indemnity against the claim or claims in question under any professional indemnity insurance taken out by the Consultant and in force at the time that the claim or claims or (if earlier) circumstances that may give rise to the claim or claims is or are reported to the insurers in question. This limitation shall not apply if no such amount is recoverable due to the Consultant having been in breach of his obligation under clause 6 or of the terms of any insurance maintained in accordance therewith or having failed in due time to report the claim or such circumstances to the insurers in question and

(iii) the amount of the Consultant's "Net Contribution" if applicable: that is the amount that is determined on the basis that the Consultant's liability is limited to that proportion of the Client's losses which it would be just and equitable for the Consultant to pay having regard to the extent of the Consultant's responsibility for the same and on the assumptions that: all other consultants, contractors, sub contractors, project managers or advisers engaged in connection with the same project shall have provided to the Client contractual undertakings on terms no less onerous than those set out in Clause 2.1 in respect of the carrying out of their obligations in connection with the project; and there are no exclusions of or limitations of liability nor joint insurance or co-insurance provisions between the Client and any other party referred to in this sub-clause and any such other party who is responsible to any extent for the Client's losses is contractually liable to the Client for the same; and all such other consultants, contractors, sub contractors, project managers or advisers have paid to the Client such sum as it would be just and equitable for them to pay having regard to the extent of their responsibility.

6.3 No action or proceedings under or arising out of or in connection with this Agreement whether in contract or in tort, in negligence, for breach of statutory duty or otherwise shall be commenced by a party (a) after the expiry of six years after the completion of the Services or such earlier date as may be prescribed by law (b) at any time against any employee officer or director of the other party (save in respect of death or personal injury resulting from negligence).

7 **INSURANCE**

Provided always that such insurance is available at commercially reasonable rates, and subject to all exceptions, exclusions and limitations to the scope of cover that are commonly included in such insurance at the time it is taken out or renewed as the case may be, the Consultant shall maintain professional indemnity and public liability insurance. When reasonably requested to do so the Consultant shall provide a brokers' certificate as evidence that insurance is being maintained.

8 **TERRORISM**

The Consultant is not responsible under this Agreement or otherwise for designing or advising on or otherwise taking measures to prevent or mitigate the effect of any act of terrorism or any action that may be taken in controlling, preventing, suppressing or in any way relating to an act of terrorism (herein called "terrorism matters") and the liability if any of the Consultant under or in connection with this Agreement whether in contract or in tort, in negligence, for breach of statutory duty or otherwise for any claim which may arise out of or in connection with terrorism matters is excluded.

9 **POLLUTION, CONTAMINATION & ASBESTOS**

Unless included in the Services the Consultant is not responsible under this Agreement or otherwise for advising on matters which wholly, partly, directly or indirectly arise out of or result from asbestos (including without limitation the costs of testing for, monitoring, abatement, mitigation, removal, remediation or disposal of any asbestos or product or waste that contains asbestos) or pollution and contamination (including without limitation by naturally occurring or man-made substances, forces or organisms or any combination of them whether permanent or transitory and however occurring (herein called "asbestos and pollution and contamination matters") and the liability if any of the Consultant under or in connection with this Agreement whether in contract or in tort, in negligence, for breach of statutory duty or otherwise for any claim which may arise out of or in connection with asbestos and pollution and contamination matters is excluded.

10 **INDEMNITY**

The Client shall indemnify and keep indemnified the Consultant from and against any and all claims (including those for injury or death), demands, proceedings, damages, costs, charges and expenses arising out of or in connection with this Agreement in excess of the total liability of the Consultant determined in accordance with clause 6.1 and/or as the case may be the liability of the Consultant determined in accordance with clause 6.2 and/or arising out of or in connection with terrorism matters and/or asbestos and pollution and contamination matters where clause 9 applies and/or which may be in respect of events occurring after the expiry of the period referred to in clause 6.3.

11 **SITE OPERATIONS**

11.1 In the event of any visit to site by the Consultant's personnel they shall be regarded for all purposes as being the Client's visitors and the Consultant shall not be deemed to have assumed the role of occupier, or otherwise to have assumed control of or responsibility for the site or any persons on it.

11.2 In undertaking any physical site works the Consultant shall take reasonable care to minimise damage to property, including underground services and other sub-surface

© Scott Wilson

obstructions notified to the Consultant (in writing) as being the likely position of underground services or other obstructions.

11.3 Boreholes and other excavations, if any, undertaken by the Consultant shall, unless the Client instructs otherwise in writing, be backfilled with excavated material and compacted as far as is practicable using the excavation plant. Surplus spoil shall be heaped over the excavation and left in a tidy condition before the Consultant leaves site. The Consultant may dispose of drilling samples and other test specimens, if any, upon the expiry of 28 days after the Client has received the Consultant's report.

11.4 To the extent the Services include reporting on ground conditions:- the Consultant's work shall be based solely on the soil and groundwater conditions revealed in boreholes and excavations supplemented by site and laboratory test results; records of water levels shall not be taken as equilibrium conditions unless specifically noted; and an absence of water level observations may indicate that the hole has been sealed off by casing or the presence of low permeability strata and does not necessarily indicate that water is not present.

12 **SUSPENSION AND TERMINATION**

12.1 If the Client shall fail to pay the Consultant in full any amount properly due and payable under this Agreement by the final date for payment the Consultant may (without prejudice to its other rights and remedies) after giving the Client not less than seven (7) days notice in writing of the same specifying the grounds for so doing, suspend its performance of this Agreement until payment in full of the amount due. Any period during which the Consultant exercises its right to suspend its performance shall be disregarded in computing for the purposes of any contractual time limit the time taken by the Consultant, or any of the Consultants' sub-contractors, to complete any Services directly or indirectly affected by the exercise of such right.

12.2 Either party may terminate performance of this Agreement (a) at any time by giving not less than one month's written notice to the other (b) in the event of a material breach of this Agreement by the other or in the event of the insolvency of the other by giving not less than two weeks' written notice. In this Agreement "insolvency" shall mean becoming bankrupt going into liquidation (either voluntary or compulsory except as part of a bona fide scheme of reconstruction or amalgamation) being dissolved compounding with its creditors or having a receiver administrative receiver or administrator appointed of the whole or part of its assets.

12.3 If circumstances arise for which the Consultant is not responsible and which the Consultant considers make it irresponsible for the Consultant to perform all or any part of the Services the Consultant shall be entitled to terminate the appointment or discontinue performance of any part by giving not less than two weeks' written notice.

12.4 Termination of the Consultant's appointment under this Agreement shall not prejudice or affect the accrued rights or claims of either party.

13 **PERSONNEL**

The Client shall not solicit (and shall procure that no parent company or subsidiary of the Client solicits) the services of any employee officer or director of the Consultant without the prior written consent of the Consultant during the term of this Agreement or for the period of six months after the termination of this Agreement. If during such period any such employee officer or director of the Consultant accepts an offer of employment made by the Client as a result of an introduction in the course of this Agreement, the Client shall pay to the Consultant a sum equivalent to six months gross salary (plus bonuses) of the person concerned.

14 **DISPUTES**

Any dispute shall, in the first instance, be referred to the respective Chief Executive of the Client and the Consultant who shall attempt, in good faith, to resolve the matter. Each party shall have the right to refer any dispute to adjudication in accordance with the Construction Industry Council Model Adjudication Procedure current at the time of referral.

15 GENERAL

15.1 The Client shall not, without the written consent of the Consultant assign or transfer any benefit or obligation under this Agreement. The Consultant shall be free to sub-let performance of part or all of the Services. For the avoidance of doubt agency staff seconded to or engaged by the Consultant shall not be deemed to be sub-consultants.

15.2 English law shall govern the application and interpretation of this Agreement, and each party submits to the jurisdiction of the courts of England.

15.3 Nothing in this Agreement confers or purports to confer on any third party any benefit or any right to enforce any term of this Agreement. In particular any advice provided by the Consultant is for the sole benefit of the Client and may not be used or relied upon by third parties.

15.4 Nothing in this Agreement excludes or restricts the Consultant's liability for death or personal injury resulting from its negligence.

15.5 Other than any variation set out in the Offer, no variation to these Terms of Business may be made without the written agreement of the Client and the Consultant.

© Scott Wilson

Appendix F
Surface Water Drainage Drawings and Calculations

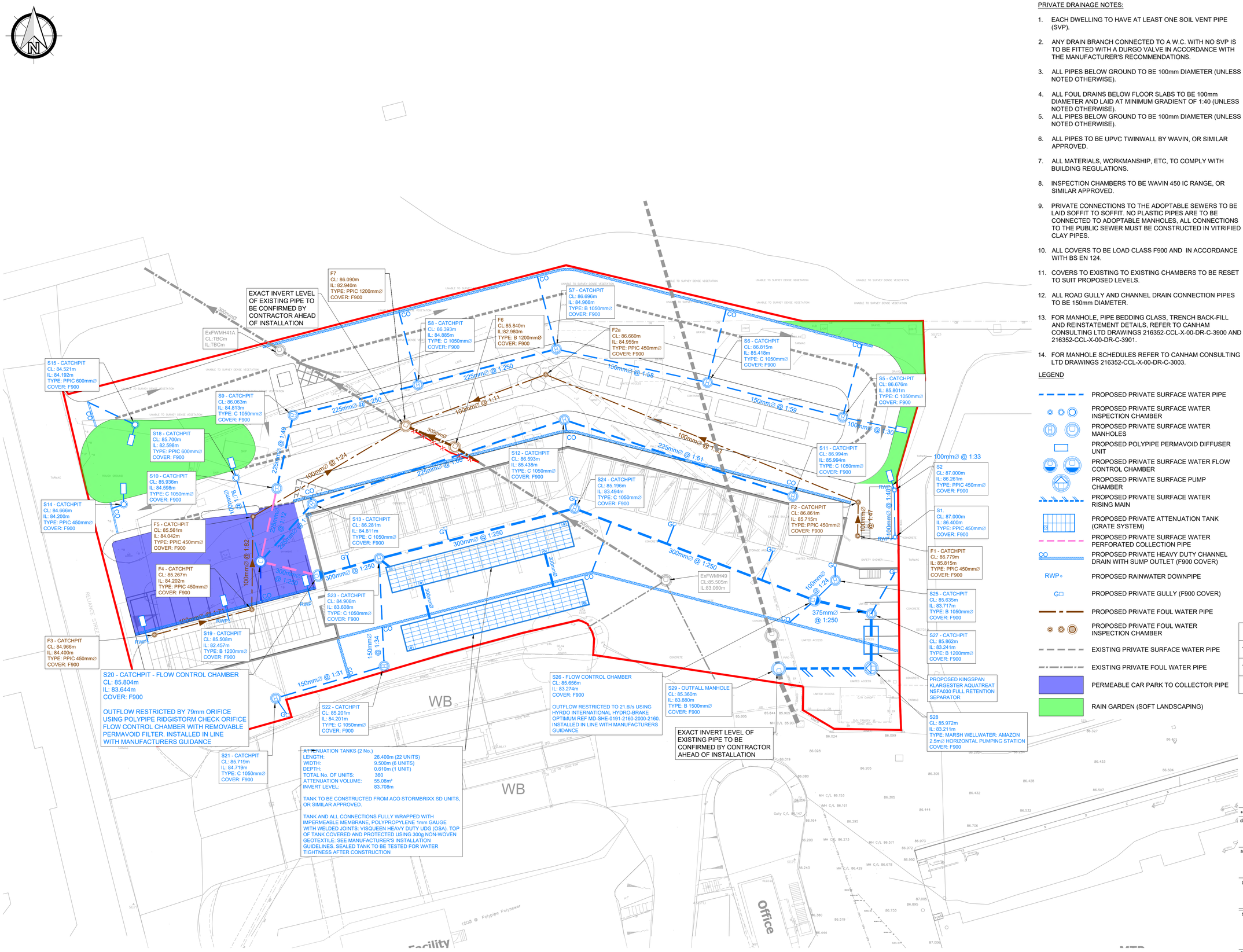

PRIVATE DRAINAGE NOTES:

1. EACH DWELLING TO HAVE AT LEAST ONE SOIL VENT PIPE (SVP).
2. ANY DRAIN BRANCH CONNECTED TO A W.C. WITH NO SVP IS TO BE FITTED WITH A DURGO VALVE IN ACCORDANCE WITH THE MANUFACTURER'S RECOMMENDATIONS.
3. ALL PIPES BELOW GROUND TO BE 100mm DIAMETER (UNLESS NOTED OTHERWISE).
4. ALL FOUL DRAINS BELOW FLOOR SLABS TO BE 100mm DIAMETER AND LAID AT MINIMUM GRADIENT OF 1:40 (UNLESS NOTED OTHERWISE).
5. ALL PIPES BELOW GROUND TO BE 100mm DIAMETER (UNLESS NOTED OTHERWISE).
6. ALL PIPES TO BE UPVC TWINWALL BY WAVIN, OR SIMILAR APPROVED.
7. ALL MATERIALS, WORKMANSHIP, ETC, TO COMPLY WITH BUILDING REGULATIONS.
8. INSPECTION CHAMBERS TO BE WAVIN 450 IC RANGE, OR SIMILAR APPROVED.
9. PRIVATE CONNECTIONS TO THE ADOPTABLE SEWERS TO BE LAID SOFFIT TO SOFFIT. NO PLASTIC PIPES ARE TO BE CONNECTED TO ADOPTABLE MANHOLES, ALL CONNECTIONS TO THE PUBLIC SEWER MUST BE CONSTRUCTED IN VITRIFIED CLAY PIPES.
10. ALL COVERS TO BE LOAD CLASS F900 AND IN ACCORDANCE WITH BS EN 124.
11. COVERS TO EXISTING TO EXISTING CHAMBERS TO BE RESET TO SUIT PROPOSED LEVELS.
12. ALL ROAD GULLY AND CHANNEL DRAIN CONNECTION PIPES TO BE 150mm DIAMETER.
13. FOR MANHOLE, PIPE BEDDING CLASS, TRENCH BACK-FILL AND REINSTATEMENT DETAILS, REFER TO CANHAM CONSULTING LTD DRAWINGS 216352-CCL-X-00-DR-C-3900 AND 216352-CCL-X-00-DR-C-3901.
14. FOR MANHOLE SCHEDULES REFER TO CANHAM CONSULTING LTD DRAWINGS 216352-CCL-X-00-DR-C-3003.

LEGEND

- PROPOSED PRIVATE SURFACE WATER PIPE
- PROPOSED PRIVATE SURFACE WATER INSPECTION CHAMBER
- PROPOSED PRIVATE SURFACE WATER MANHOLES
- PROPOSED POLYPIPE PERMAVOID DIFFUSER UNIT
- PROPOSED PRIVATE SURFACE WATER FLOW CONTROL CHAMBER
- PROPOSED PRIVATE SURFACE PUMP CHAMBER
- PROPOSED PRIVATE SURFACE WATER RISING MAIN
- PROPOSED PRIVATE ATTENUATION TANK (CRATE SYSTEM)
- PROPOSED PRIVATE SURFACE WATER PERFORATED COLLECTION PIPE
- CO — PROPOSED PRIVATE HEAVY DUTY CHANNEL DRAIN WITH SUMP OUTLET (F900 COVER)
- RWP — PROPOSED RAINWATER DOWNPIPE
- G — PROPOSED PRIVATE GULLY (F900 COVER)
- PROPOSED PRIVATE FOUL WATER PIPE
- PROPOSED PRIVATE FOUL WATER INSPECTION CHAMBER
- EXISTING PRIVATE SURFACE WATER PIPE
- EXISTING PRIVATE FOUL WATER PIPE
- PERMEABLE CAR PARK TO COLLECTOR PIPE
- RAIN GARDEN (SOFT LANDSCAPING)

GENERAL NOTES:

1. THE DRAWINGS, DESIGN AND ALL INFORMATION CONTAINED THEREIN ARE THE SOLE COPYRIGHT OF CANHAM CONSULTING LTD AND ANY REPRODUCTION IS FORBIDDEN UNLESS PERMISSION IS OBTAINED IN WRITING.
2. ALL DRAWINGS SHALL BE READ IN CONJUNCTION WITH ALL RELEVANT CIVIL / STRUCTURAL ENGINEERING DRAWINGS, THE PROJECT SPECIFICATION AND DRAWINGS PRODUCED BY THE ARCHITECTS, SERVICE ENGINEERS AND LANDSCAPE ARCHITECTS.
3. FOR ALL SETTING OUT INFORMATION REFER TO THE ARCHITECT'S DRAWINGS AND DETAILS.
4. ANY DISCREPANCIES BETWEEN THE INFORMATION GIVEN BY THE ENGINEER, AND THAT PROVIDED BY OTHERS, MUST BE REFERRED TO THE ENGINEER BEFORE THE AFFECTED WORKS PROCEED.
5. DIMENSIONS MUST NOT BE SCALED FROM THE ENGINEER'S DRAWINGS.
6. ALL DIMENSIONS ARE IN METRES UNLESS NOTED OTHERWISE.
7. DIMENSIONS MARKED * ARE SUBJECT TO CONFIRMATION BY SITE MEASUREMENT BEFORE CONSTRUCTION PROCEEDS.
8. THE CONTRACTOR IS TO ENSURE THE STABILITY OF EACH ELEMENT AND THE STABILITY OF THE OVERALL CONSTRUCTION UNTIL THE WORKS ARE COMPLETE.
9. ALL DESIGNS, CONNECTIONS, WORKMANSHIP AND MATERIAL ARE TO COMPLY WITH THE CURRENT BUILDING REGULATIONS AND THE LATEST RELEVANT BRITISH STANDARD SPECIFICATION AND CODES OF PRACTICE OR OTHERWISE BE TO THE SPECIFIC WRITTEN APPROVAL OF THE ENGINEER.
10. INSPECTIONS MADE BY THE LOCAL AUTHORITY, SHALL BE ARRANGED BY THE CONTRACTOR TO SUIT THEIR PROGRAMME. ANY COST ARISING OUT OF FAILING TO CARRY OUT THE WORK TO THE SATISFACTION OF THE LOCAL AUTHORITY WILL BE THE SOLE RESPONSIBILITY OF THE CONTRACTOR.
11. THE CONTRACTOR MUST MAKE THEMSELVES AWARE OF THE EXISTING UTILITIES / SERVICES LOCATED WITHIN AND ADJACENT TO THE SITE. **NO EXCAVATIONS ARE TO BE UNDERTAKEN UNTIL THE UTILITY COMPANIES HAVE BEEN INFORMED / CO-ORDINATED WITH**: DIAL-BEFORE-YOU-DIG ADVICE IS FOLLOWED AND THE AREA IS CAT SCANNED. ALL UTILITY COMPANY GUIDELINES AND HEALTH & SAFETY PROCEDURES MUST BE STRICTLY FOLLOWED.
12. FOR SIZE AND LOCATION OF ALL SERVICES REFER TO THE SERVICE ENGINEER'S AND ARCHITECT'S DRAWINGS.

rev	date	details	drawn	checked
T02	23.01.25	TENDER ISSUE	SAH	MH
T01	13.12.24	TENDER ISSUE	KS	MH

Canham Consulting

Structural Engineers | Civil Engineers | Building Surveyors

+44 (0)1603 430650 | mail@canhamconsulting.co.uk | www.canhamconsulting.co.uk

client
SUEZ RECYCLING & RECOVERY UK Ltd

architect

project
RELIANCE STREET, MANCHESTER
HWRC DEVELOPMENT

title
PRIVATE DRAINAGE:
GENERAL ARRANGEMENT

CCL ref:	drawn	design	checked	scale	size	date
216352	GPC	MH	MH	1:250	A1 (L)	25.05.2022

status:
D2 - SUITABLE FOR TENDER

drawing number: 216352-CCL-XX-00-DR-C-3000
revision: T02

© This drawing is copyright and is not to be reproduced without the written permission of Canham Consulting Ltd

THIS DESIGN IS PRODUCED IN ACCORDANCE WITH THE CONSTRUCTION (DESIGN AND MANAGEMENT) REGULATIONS 2015 INCORPORATING THE APPROVED CODE OF PRACTICE. REGULATIONS 2, 9 AND 11 - THOSE ALTERING THE DESIGN WITHOUT THE AUTHORITY OF CANHAM CONSULTING LTD SHOULD BE AWARE THEY ALSO ASSUME RESPONSIBILITY FOR THOSE DUTIES.

SCALE 1:250m
0m 5m 10m 15m 20m 25m
SCALE BAR FOR INFORMATION ONLY

SURFACE WATER MANHOLE SCHEDULE

U/S MH REFERENCE	U/S MH LOCATION		U/S COVER LEVEL (m)	U/S INVERT LEVEL (m)	U/S MH DEPTH (m)	D/S MH REFERENCE	D/S MH INVERT LEVEL (m)	PIPE #	PIPE LENGTH (m)	PIPE DIAMETER (mm)	SLOPE (1:X)	U/S MH SIZE (DIA - mm)	U/S MH TYPE	U/S MH COVER	NOTES
	EASTING (m)	NORTHING (m)													
S1	388137.674	401050.445	87.000	86.400	0.600	S2	86.261	1.000	6.619	100	47.5	450	IC	F900	
S2	388137.578	401057.063	87.000	86.261	0.739	RAIN GARDEN	86.189	1.001	2.389	100	33.4	450	IC	F900	
S5	388130.304	401067.351	86.676	85.801	0.875	S6	85.468	1.004	19.707	100	59.2	1050	C	F900	CATCHPIT
S6	388111.216	401072.250	86.815	85.418	1.398	S7	85.041	1.005	21.837	150	58.0	1050	C	F900	CATCHPIT
S7	388089.892	401076.956	86.696	84.966	1.730	S8	84.885	1.006	20.146	225	250.0	1050	B	F900	CATCHPIT
S8	388070.389	401071.906	86.393	84.885	1.507	S9	84.813	1.007	18.115	225	250.0	1050	C	F900	CATCHPIT
S9	388052.786	401067.631	86.063	84.813	1.250	S10	84.598	1.008	10.572	225	49.1	1050	C	F900	CATCHPIT
S10	388050.486	401057.312	85.936	84.598	1.338	S19	83.752	1.009	10.572	225	12.5	1050	C	F900	CATCHPIT
S11	388123.264	401056.211	86.994	85.994	1.000	S12	85.438	2.000	32.882	225	59.1	1050	C	F900	CATCHPIT
S12	388091.386	401064.276	86.593	85.438	1.155	S13	84.811	2.001	37.053	225	59.1	1050	C	F900	CATCHPIT
S13	388055.476	401055.146	86.281	84.811	1.470	S19	83.752	2.002	10.937	225	10.3	1050	C	F900	CATCHPIT
S14	388028.890	401055.063	84.666	84.200	0.466	RAIN GARDEN	84.148	3.000	4.893	150	94.1	450	IC	F900	CATCHPIT
S15	388030.847	401067.557	84.480	84.200	0.280	RAIN GARDEN	84.148	4.000	7.869	150	150.0	600	IC	F900	CATCHPIT
S18	388044.746	401058.806	85.700	83.988	1.712	S19	83.827	3.003	12.304	150	76.4	600	IC	F900	CATCHPIT
S19	388048.185	401046.993	85.508	83.677	1.831	S20	83.644	1.010	8.374	300	250.0	1200	B	F900	CATCHPIT
S20	388056.326	401045.028	85.804	83.644	2.160	S23	83.608	1.011	8.919	300	250.0	1050	B	F900	FLOW CONTROL CHAMBER
S21	388050.327	401027.731	85.719	84.719	1.000	S22	84.201	5.000	15.946	150	30.8	1050	C	F900	CATCHPIT
S22	388065.621	401032.246	85.201	84.201	1.000	S23	83.758	5.001	15.192	150	34.4	1050	C	F900	CATCHPIT
S23	388064.918	401047.421	84.908	83.608	1.300	S24	83.494	1.012	28.463	300	250.0	1050	C	F900	CATCHPIT
S24	388092.490	401054.488	85.196	83.494	1.702	S26	83.349	1.013	36.245	300	250.0	1050	C	F900	CATCHPIT
S25	388129.259	401044.350	85.635	83.717	1.918	S26	83.549	6.000	4.063	100	24.3	1050	B	F900	CATCHPIT
S26	388126.339	401041.526	85.656	83.274	2.382	S27	83.242	1.014	8.198	375	250.0	1050	B	F900	FLOW CONTROL CHAMBER
S27	388134.317	401039.638	85.862	83.242	2.620	S28	83.211	1.015	7.678	375	250.0	1200	B	F900	CATCHPIT
S28	388134.304	401031.960	85.972	83.211	2.761	OUTFALL MANHOLE	83.880	1.016	13.033	300	-19.5			F900	PUMP CHAMBER
S29	388121.272	401031.891	85.360	83.880	1.480	ExSWMH				600		1500	C	F900	BUILT OVER EXISTING SEWER

FOUL WATER MANHOLE SCHEDULE

U/S MH REFERENCE	U/S MH LOCATION		U/S COVER LEVEL (m)	U/S INVERT LEVEL (m)	U/S MH DEPTH (m)	D/S MH REFERENCE	D/S MH INVERT LEVEL (m)	PIPE #	PIPE LENGTH (m)	PIPE DIAMETER (mm)	SLOPE (1:X)	U/S MH SIZE (DIA - mm)	U/S MH TYPE	U/S MH COVER	NOTES
	EASTING (m)	NORTHING (m)													
F1	388132.404	401050.626	86.779	85.815	0.964	F2	85.715	F1.000	4.731	100	47.1	450	IC	F900	CATCHPIT
F2	388132.490	401055.356	86.861	85.715	1.147	F2a	84.955	F1.001	47.624	100	62.7	450	IC	F900	CATCHPIT
F2a	388088.402	401073.365	86.660	84.955	1.706	F7	83.000	F1.002	19.553	100	10.0	450	IC	F900	CATCHPIT
F3	388033.226	401036.670	84.966	84.400	0.566	F4	84.202	F2.000	14.178	100	71.5	450	IC	F900	CATCHPIT
F4	388046.950	401040.229	85.267	84.202	1.065	F5	84.042	F2.001	13.114	100	82.0	450	IC	F900	CATCHPIT
F5	388047.128	401053.342	85.561	84.042	1.519	F7	83.000	F2.002	26.322	100	25.3	450	IC	F900	CATCHPIT
F6	388075.580	401063.146	85.840	82.980	2.860	F7	82.940	F3.000	7.530	300	200	1200	B	F900	BUILT OVER EXISTING SEWER
F7	388068.665	401066.127	86.090	82.940	3.150	ExFWMH41A				300		1200	B	F900	BUILT OVER EXISTING SEWER

GENERAL NOTES:

1. THE DRAWINGS, DESIGN AND ALL INFORMATION CONTAINED THEREIN ARE THE SOLE COPYRIGHT OF CANHAM CONSULTING LTD AND ANY REPRODUCTION IS FORBIDDEN UNLESS PERMISSION IS OBTAINED IN WRITING.
2. ALL DRAWINGS SHALL BE READ IN CONJUNCTION WITH ALL RELEVANT CIVIL / STRUCTURAL ENGINEERING DRAWINGS, THE PROJECT SPECIFICATION AND DRAWINGS PRODUCED BY THE ARCHITECTS, SERVICE ENGINEERS AND LANDSCAPE ARCHITECTS.
3. FOR ALL SETTING OUT INFORMATION REFER TO THE ARCHITECT'S DRAWINGS AND DETAILS.
4. ANY DISCREPANCIES BETWEEN THE INFORMATION GIVEN BY THE ENGINEER, AND THAT PROVIDED BY OTHERS, MUST BE REFERRED TO THE ENGINEER BEFORE THE AFFECTED WORKS PROCEED.
5. DIMENSIONS MUST NOT BE SCALED FROM THE ENGINEER'S DRAWINGS.
6. ALL DIMENSIONS ARE IN METRES UNLESS NOTED OTHERWISE.
7. DIMENSIONS MARKED * ARE SUBJECT TO CONFIRMATION BY SITE MEASUREMENT BEFORE CONSTRUCTION PROCEEDS.
8. THE CONTRACTOR IS TO ENSURE THE STABILITY OF EACH ELEMENT AND THE STABILITY OF THE OVERALL CONSTRUCTION UNTIL THE WORKS ARE COMPLETE.
9. ALL DESIGNS, CONNECTIONS, WORKMANSHIP AND MATERIAL ARE TO COMPLY WITH THE CURRENT BUILDING REGULATIONS AND THE LATEST RELEVANT BRITISH STANDARD SPECIFICATION AND CODES OF PRACTICE OR OTHERWISE BE TO THE SPECIFIC WRITTEN APPROVAL OF THE ENGINEER.
10. INSPECTIONS MADE BY THE LOCAL AUTHORITY, SHALL BE ARRANGED BY THE CONTRACTOR TO SUIT THEIR PROGRAMME. ANY COST ARISING OUT OF FAILING TO CARRY OUT THE WORK TO THE SATISFACTION OF THE LOCAL AUTHORITY WILL BE THE SOLE RESPONSIBILITY OF THE CONTRACTOR.
11. THE CONTRACTOR MUST MAKE THEMSELVES AWARE OF THE EXISTING UTILITIES / SERVICES LOCATED WITHIN AND ADJACENT TO THE SITE. **NO EXCAVATIONS ARE TO BE UNDERTAKEN UNTIL THE UTILITY COMPANIES HAVE BEEN INFORMED / CO-ORDINATED WITH**: DIAL-BEFORE-YOU-DIG ADVICE IS FOLLOWED AND THE AREA IS CAT SCANNED. ALL UTILITY COMPANY GUIDELINES AND HEALTH & SAFETY PROCEDURES MUST BE STRICTLY FOLLOWED.
12. FOR SIZE AND LOCATION OF ALL SERVICES REFER TO THE SERVICE ENGINEER'S AND ARCHITECT'S DRAWINGS.

rev	date	details	drawn	check
T02	23.01.25	TENDER ISSUE	SAH	MH
T01	13.12.24	TENDER ISSUE	KS	MH

Canham Consulting
Structural Civil Building Engineers

+44 (0)1603 430650 | mail@canhamconsulting.co.uk | www.canhamconsulting.co.uk

client
SUEZ RECYCLING & RECOVERY UK Ltd

architect

project
RELIANCE STREET, MANCHESTER
HWRC DEVELOPMENT

title
PRIVATE DRAINAGE:
SURFACE & FOUL WATER SHEDULES

CCL ref:	drawn	design	checked	scale	size	date
216352	GPC	MH	MH	AS SHOWN	A1 (L)	29.11.2023

status:
D2 - SUITABLE FOR TENDER

drawing number: 216352-CCL-XX-00-DR-C-3003
revision: T02

© This drawing is copyright and is not to be reproduced without the written permission of Canham Consulting Ltd

THIS DESIGN IS PRODUCED IN ACCORDANCE WITH THE CONSTRUCTION (DESIGN AND MANAGEMENT) REGULATIONS 2015 INCORPORATING THE APPROVED CODE OF PRACTICE, REGULATIONS 2, 9 AND 11. THOSE ALTERING THE DESIGN WITHOUT THE AUTHORITY OF CANHAM CONSULTING LTD SHOULD BE AWARE THEY MAY ALSO ASSUME RESPONSIBILITY FOR THOSE DUTIES.

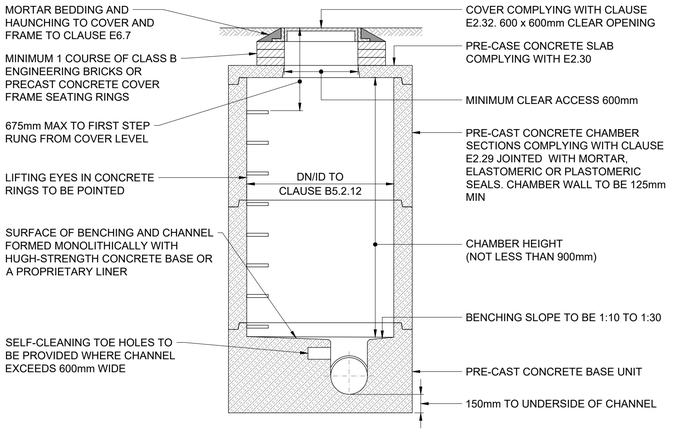

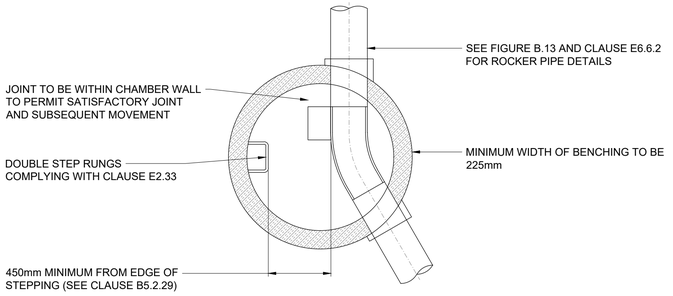

TYPICAL MANHOLE DETAIL - TYPE B

DEPTH FROM COVER LEVEL TO SOFFIT OF PIPE 1.5m TO 3.0m
RIGID MATERIAL CONSTRUCTION WITHOUT CONCRETE SURROUND
SCALE 1:25

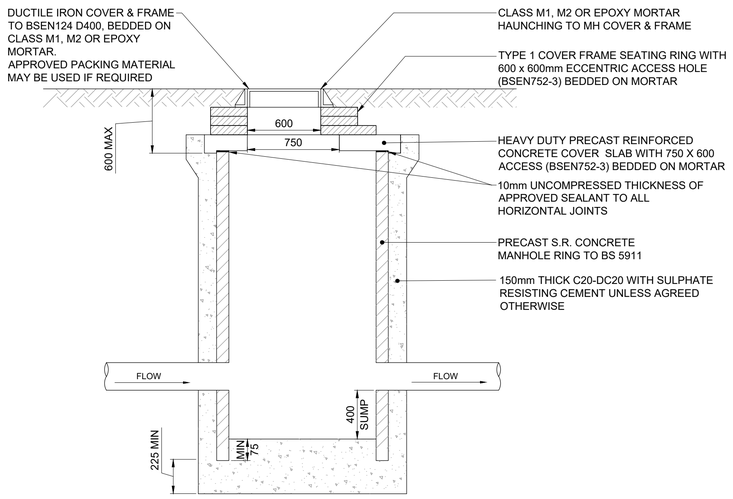

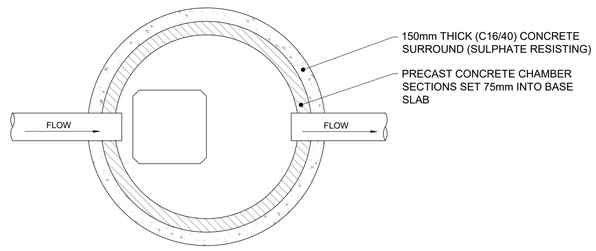

TYPICAL CATCHPIT DETAIL

SCALE 1:25

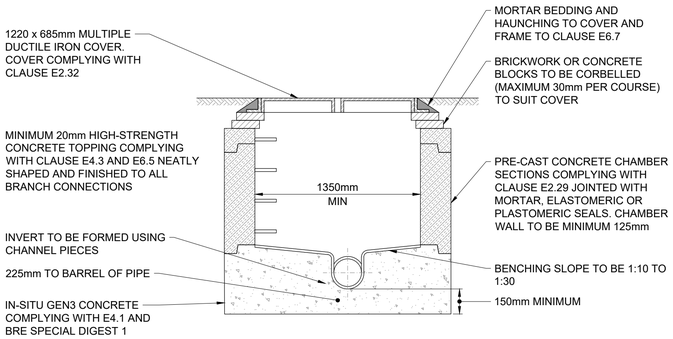

INTERNAL DIMENSIONS OF MANHOLE NORMALLY 1200 x 900mm, BUT MANHOLE WIDTH SHOULD BE INCREASED FOR PIPES LARGER THAN 450mmØ TO GIVE 225mm BENCHING EACH SIDE AND BRICKWORK/MASONRY UNITS CORBELLED DOWN TO SUIT COVER

NOTE: THE USE OF PRE-CAST CONCRETE CHAMBER UNITS TO E2.29 WITH 150mm GEN3 IN-SITU CONCRETE COMPLYING WITH E4.1 AND SPECIAL DIGEST 1 IN PLACE OF BRICK CONSTRUCTION IS PERMITTED

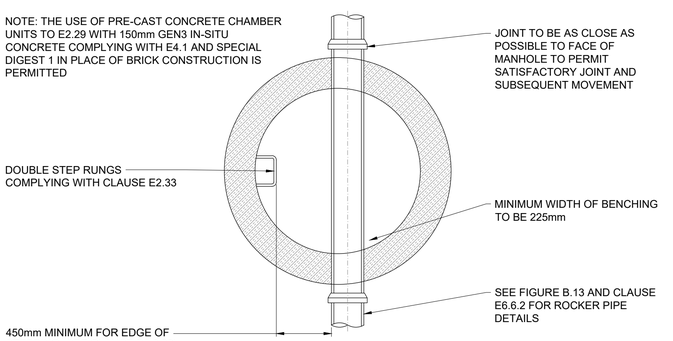

TYPICAL MANHOLE DETAIL - TYPE C

DEPTH FROM COVER LEVEL TO SOFFIT OF PIPE LESS THAN 1.5m
MAXIMUM PIPE SIZE 450mmØ, RIGID MATERIAL CONSTRUCTION
SCALE 1:25

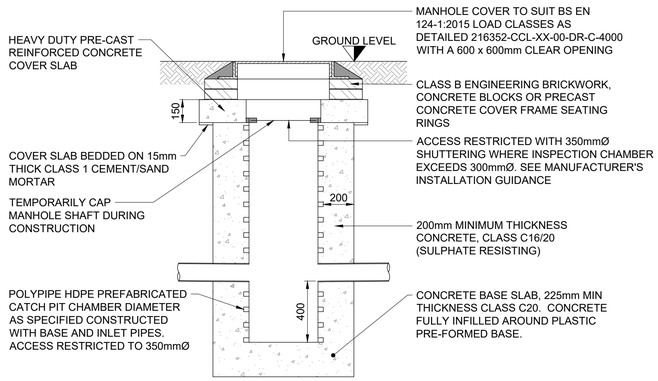

TYPICAL CATCHPIT DETAIL (CP): 315, 450 & 600mm DIAMETER

SCALE 1:20

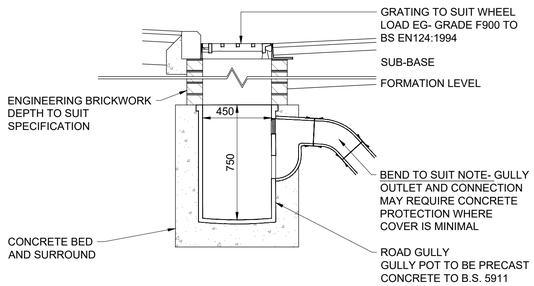

TYPICAL HIGHWAY GULLY DETAIL

NOT TO SCALE

PRIVATE DRAINAGE NOTES:

1. EACH DWELLING TO HAVE AT LEAST ONE SOIL VENT PIPE (SVP).
2. ANY DRAIN BRANCH CONNECTED TO A W.C. WITH NO SVP IS TO BE FITTED WITH A DURGO VALVE IN ACCORDANCE WITH THE MANUFACTURER'S RECOMMENDATIONS.
3. ALL PIPES BELOW GROUND TO BE 100mm DIAMETER (UNLESS NOTED OTHERWISE).
4. ALL FOUL DRAINS BELOW FLOOR SLABS TO BE 100mm DIAMETER AND LAID AT MINIMUM GRADIENT OF 1:40 (UNLESS NOTED OTHERWISE).
5. ALL PIPES BELOW GROUND TO BE 100mm DIAMETER (UNLESS NOTED OTHERWISE).
6. ALL PIPES TO BE UPVC TWINWALL BY WAVIN, OR SIMILAR APPROVED.
7. ALL MATERIALS, WORKMANSHIP, ETC, TO COMPLY WITH BUILDING REGULATIONS.
8. INSPECTION CHAMBERS TO BE WAVIN 450 IC RANGE, OR SIMILAR APPROVED.
9. PRIVATE CONNECTIONS TO THE ADOPTABLE SEWERS TO BE LAID SOFFIT TO SOFFIT. NO PLASTIC PIPES ARE TO BE CONNECTED TO ADOPTABLE MANHOLES, ALL CONNECTIONS TO THE PUBLIC SEWER MUST BE CONSTRUCTED IN VITRIFIED CLAY PIPES.
10. ALL COVERS TO BE LOAD CLASS F900 AND IN ACCORDANCE WITH BS EN 124.
11. COVERS TO EXISTING TO EXISTING CHAMBERS TO BE RESET TO SUIT PROPOSED LEVELS.
12. ALL ROAD GULLY AND CHANNEL DRAIN CONNECTION PIPES TO BE 150mm DIAMETER.
13. FOR MANHOLE, PIPE BEDDING CLASS, TRENCH BACK-FILL AND REINSTATEMENT DETAILS, REFER TO CANHAM CONSULTING LTD DRAWINGS 216352-CCL-X-00-DR-C-3900 AND 216352-CCL-X-00-DR-C-3901.
14. FOR MANHOLE SCHEDULES REFER TO CANHAM CONSULTING LTD DRAWINGS 216352-CCL-X-00-DR-C-3003.

GENERAL NOTES:

1. THE DRAWINGS, DESIGN AND ALL INFORMATION CONTAINED THEREIN ARE THE SOLE COPYRIGHT OF CANHAM CONSULTING LTD AND ANY REPRODUCTION IS FORBIDDEN UNLESS PERMISSION IS OBTAINED IN WRITING.
2. ALL DRAWINGS SHALL BE READ IN CONJUNCTION WITH ALL RELEVANT CIVIL / STRUCTURAL ENGINEERING DRAWINGS, THE PROJECT SPECIFICATION AND DRAWINGS PRODUCED BY THE ARCHITECTS, SERVICE ENGINEERS AND LANDSCAPE ARCHITECTS.
3. FOR ALL SETTING OUT INFORMATION REFER TO THE ARCHITECT'S DRAWINGS AND DETAILS.
4. ANY DISCREPANCIES BETWEEN THE INFORMATION GIVEN BY THE ENGINEER, AND THAT PROVIDED BY OTHERS, MUST BE REFERRED TO THE ENGINEER BEFORE THE AFFECTED WORKS PROCEED.
5. DIMENSIONS MUST NOT BE SCALED FROM THE ENGINEER'S DRAWINGS.
6. ALL DIMENSIONS ARE IN MILLIMETRES UNLESS NOTED OTHERWISE.
7. DIMENSIONS MARKED * ARE SUBJECT TO CONFIRMATION BY SITE MEASUREMENT BEFORE CONSTRUCTION PROCEEDS.
8. THE CONTRACTOR IS TO ENSURE THE STABILITY OF EACH ELEMENT AND THE STABILITY OF THE OVERALL CONSTRUCTION UNTIL THE WORKS ARE COMPLETE.
9. ALL DESIGNS, CONNECTIONS, WORKMANSHIP AND MATERIAL ARE TO COMPLY WITH THE CURRENT BUILDING REGULATIONS AND THE LATEST RELEVANT BRITISH STANDARD SPECIFICATION AND CODES OF PRACTICE OR OTHERWISE BE TO THE SPECIFIC WRITTEN APPROVAL OF THE ENGINEER.
10. INSPECTIONS MADE BY THE LOCAL AUTHORITY, SHALL BE ARRANGED BY THE CONTRACTOR TO SUIT THEIR PROGRAMME. ANY COST ARISING OUT OF FAILING TO CARRY OUT THE WORK TO THE SATISFACTION OF THE LOCAL AUTHORITY WILL BE THE SOLE RESPONSIBILITY OF THE CONTRACTOR.
11. THE CONTRACTOR MUST MAKE THEMSELVES AWARE OF THE EXISTING UTILITIES / SERVICES LOCATED WITHIN AND ADJACENT TO THE SITE. **NO EXCAVATIONS ARE TO BE UNDERTAKEN UNTIL THE UTILITY COMPANIES HAVE BEEN INFORMED / CO-ORDINATED WITH**: DIAL-BEFORE-YOU-DIG ADVICE IS FOLLOWED AND THE AREA IS CAT SCANNED. ALL UTILITY COMPANY GUIDELINES AND HEALTH & SAFETY PROCEDURES MUST BE STRICTLY FOLLOWED.
12. FOR SIZE AND LOCATION OF ALL SERVICES REFER TO THE SERVICE ENGINEER'S AND ARCHITECT'S DRAWINGS.

rev	date	details	drawn	checked
T02	23.01.25	TENDER ISSUE	SAH	MH
T01	13.12.24	TENDER ISSUE	KS	MH

Canham Consulting
Structural Engineers | Civil Engineers | Building Surveyors
+44 (0)1603 430650 | mail@canhamconsulting.co.uk | www.canhamconsulting.co.uk

client
SUEZ RECYCLING & RECOVERY UK Ltd

architect

project
RELIANCE STREET, MANCHESTER
HWRC DEVELOPMENT

title
PRIVATE DRAINAGE:
CONSTRUCTION DETAILS
SHEET 1 OF 2

CCL ref:	drawn	design	checked	scale	size	date
216352	GPC	MH	MH	AS SHOWN	A1 (L)	25.05.2022

status:
D2 - SUITABLE FOR TENDER

drawing number: 216352-CCL-XX-00-DR-C-3900
revision: T02

© This drawing is copyright and is not to be reproduced without the written permission of Canham Consulting Ltd

THIS DESIGN IS PRODUCED IN ACCORDANCE WITH THE CONSTRUCTION (DESIGN AND MANAGEMENT) REGULATIONS 2015 INCORPORATING THE APPROVED CODE OF PRACTICE. REGULATIONS 2 & AND 31. THOSE ALTERING THE DESIGN WITHOUT THE AUTHORITY OF CANHAM CONSULTING LTD SHOULD BE AWARE THEY MAY ALSO ASSUME RESPONSIBILITY FOR THOSE DUTIES.

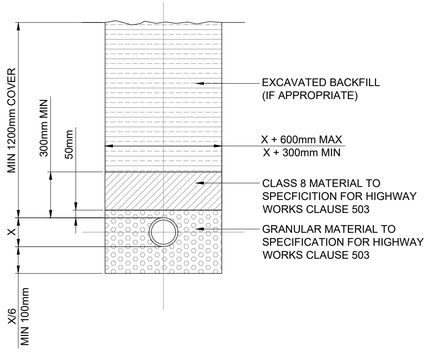

CLASS S BEDDING (PIPES UP TO 600mm)

NOT TO SCALE

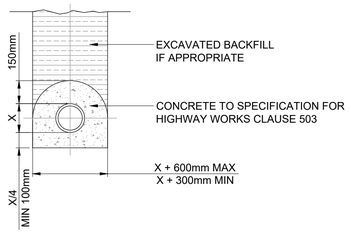

CLASS Z BEDDING (PIPES UP TO 600mm)

NOT TO SCALE

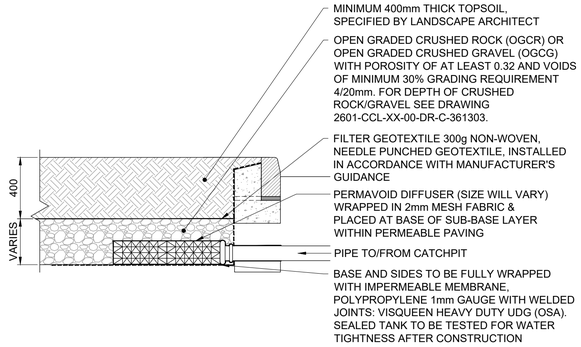

TYPICAL RAIN GARDEN DETAIL

SCALE 1:20

PRIVATE DRAINAGE NOTES:

1. EACH DWELLING TO HAVE AT LEAST ONE SOIL VENT PIPE (SVP).
2. ANY DRAIN BRANCH CONNECTED TO A W.C. WITH NO SVP IS TO BE FITTED WITH A DURGO VALVE IN ACCORDANCE WITH THE MANUFACTURER'S RECOMMENDATIONS.
3. ALL PIPES BELOW GROUND TO BE 100mm DIAMETER (UNLESS NOTED OTHERWISE).
4. ALL FOUL DRAINS BELOW FLOOR SLABS TO BE 100mm DIAMETER AND LAID AT MINIMUM GRADIENT OF 1:40 (UNLESS NOTED OTHERWISE).
5. ALL PIPES BELOW GROUND TO BE 100mm DIAMETER (UNLESS NOTED OTHERWISE).
6. ALL PIPES TO BE UPVC TWINWALL BY WAVIN, OR SIMILAR APPROVED.
7. ALL MATERIALS, WORKMANSHIP, ETC, TO COMPLY WITH BUILDING REGULATIONS.
8. INSPECTION CHAMBERS TO BE WAVIN 450 IC RANGE, OR SIMILAR APPROVED.
9. PRIVATE CONNECTIONS TO THE ADOPTABLE SEWERS TO BE LAID SOFFIT TO SOFFIT. NO PLASTIC PIPES ARE TO BE CONNECTED TO ADOPTABLE MANHOLES, ALL CONNECTIONS TO THE PUBLIC SEWER MUST BE CONSTRUCTED IN VITRIFIED CLAY PIPES.
10. ALL COVERS TO BE LOAD CLASS F900 AND IN ACCORDANCE WITH BS EN 124.
11. COVERS TO EXISTING TO EXISTING CHAMBERS TO BE RESET TO SUIT PROPOSED LEVELS.
12. ALL ROAD GULLY AND CHANNEL DRAIN CONNECTION PIPES TO BE 150mm DIAMETER.
13. FOR MANHOLE, PIPE BEDDING CLASS, TRENCH BACK-FILL AND REINSTATEMENT DETAILS, REFER TO CANHAM CONSULTING LTD DRAWINGS 216352-CCL-X-00-DR-C-3900 AND 216352-CCL-X-00-DR-C-3901.
14. FOR MANHOLE SCHEDULES REFER TO CANHAM CONSULTING LTD DRAWINGS 216352-CCL-X-00-DR-C-3003.

GENERAL NOTES:

1. THE DRAWINGS, DESIGN AND ALL INFORMATION CONTAINED THEREIN ARE THE SOLE COPYRIGHT OF CANHAM CONSULTING LTD AND ANY REPRODUCTION IS FORBIDDEN UNLESS PERMISSION IS OBTAINED IN WRITING.
2. ALL DRAWINGS SHALL BE READ IN CONJUNCTION WITH ALL RELEVANT CIVIL / STRUCTURAL ENGINEERING DRAWINGS, THE PROJECT SPECIFICATION AND DRAWINGS PRODUCED BY THE ARCHITECTS, SERVICE ENGINEERS AND LANDSCAPE ARCHITECTS.
3. FOR ALL SETTING OUT INFORMATION REFER TO THE ARCHITECT'S DRAWINGS AND DETAILS.
4. ANY DISCREPANCIES BETWEEN THE INFORMATION GIVEN BY THE ENGINEER, AND THAT PROVIDED BY OTHERS, MUST BE REFERRED TO THE ENGINEER BEFORE THE AFFECTED WORKS PROCEED.
5. DIMENSIONS MUST NOT BE SCALED FROM THE ENGINEER'S DRAWINGS.
6. ALL DIMENSIONS ARE IN MILLIMETRES UNLESS NOTED OTHERWISE.
7. DIMENSIONS MARKED * ARE SUBJECT TO CONFIRMATION BY SITE MEASUREMENT BEFORE CONSTRUCTION PROCEEDS.
8. THE CONTRACTOR IS TO ENSURE THE STABILITY OF EACH ELEMENT AND THE STABILITY OF THE OVERALL CONSTRUCTION UNTIL THE WORKS ARE COMPLETE.
9. ALL DESIGNS, CONNECTIONS, WORKMANSHIP AND MATERIAL ARE TO COMPLY WITH THE CURRENT BUILDING REGULATIONS AND THE LATEST RELEVANT BRITISH STANDARD SPECIFICATION AND CODES OF PRACTICE OR OTHERWISE BE TO THE SPECIFIC WRITTEN APPROVAL OF THE ENGINEER.
10. INSPECTIONS MADE BY THE LOCAL AUTHORITY, SHALL BE ARRANGED BY THE CONTRACTOR TO SUIT THEIR PROGRAMME. ANY COST ARISING OUT OF FAILING TO CARRY OUT THE WORK TO THE SATISFACTION OF THE LOCAL AUTHORITY WILL BE THE SOLE RESPONSIBILITY OF THE CONTRACTOR.
11. THE CONTRACTOR MUST MAKE THEMSELVES AWARE OF THE EXISTING UTILITIES / SERVICES LOCATED WITHIN AND ADJACENT TO THE SITE. **NO EXCAVATIONS ARE TO BE UNDERTAKEN UNTIL THE UTILITY COMPANIES HAVE BEEN INFORMED / CO-ORDINATED WITH**: DIAL-BEFORE-YOU-DIG ADVICE IS FOLLOWED AND THE AREA IS CAT SCANNED. ALL UTILITY COMPANY GUIDELINES AND HEALTH & SAFETY PROCEDURES MUST BE STRICTLY FOLLOWED.
12. FOR SIZE AND LOCATION OF ALL SERVICES REFER TO THE SERVICE ENGINEER'S AND ARCHITECT'S DRAWINGS.

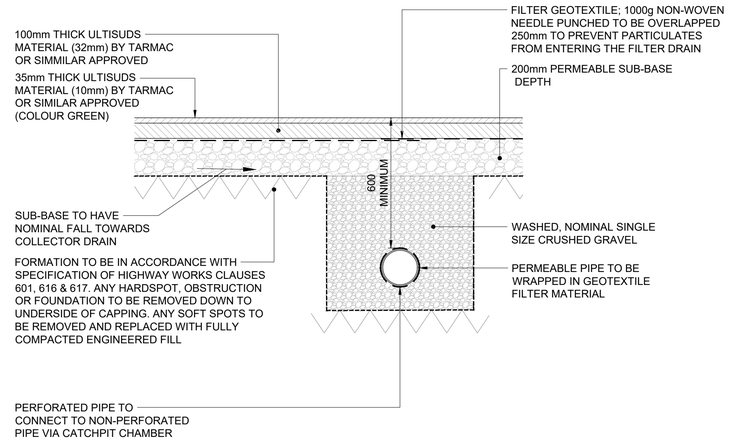

PERMEABLE PAVING / COLLECTOR DRAIN DETAIL

SCALE 1:20

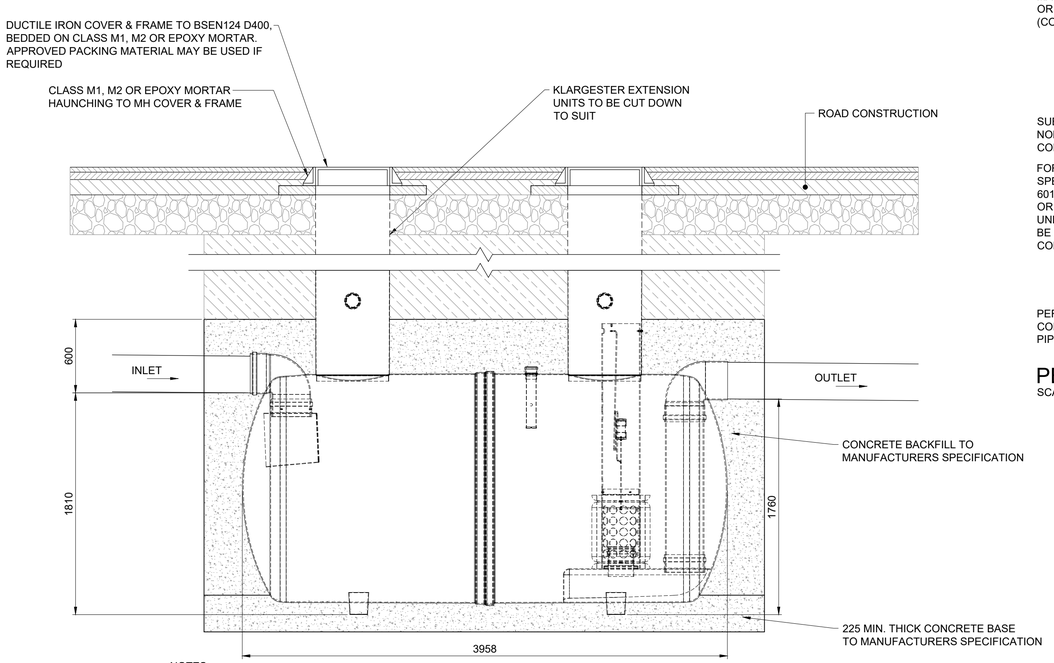

NOTES:

1. KLARGESTER BYPASS SEPERATOR TO BE INSTALLED IN-LINE WITH MANUFACTURERS GUIDELINES.
2. THIS DRAWING SHOULD BE USED FOR DIMENSIONAL PURPOSES ONLY.

KLARGESTER NSFA030 FULL RETENTION SEPERATOR - SECTION B-B

SCALE 1:25

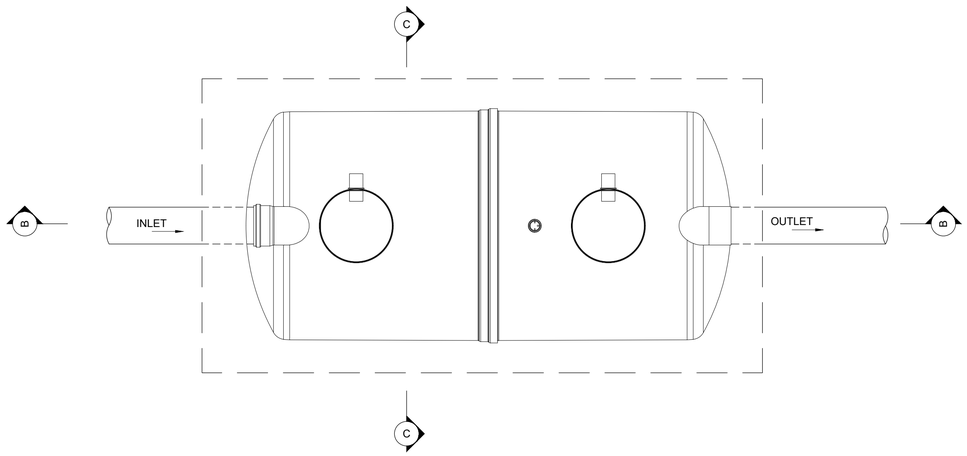

KLARGESTER NSFA030 FULL RETENTION SEPARATOR - PLAN VIEW

SCALE 1:25

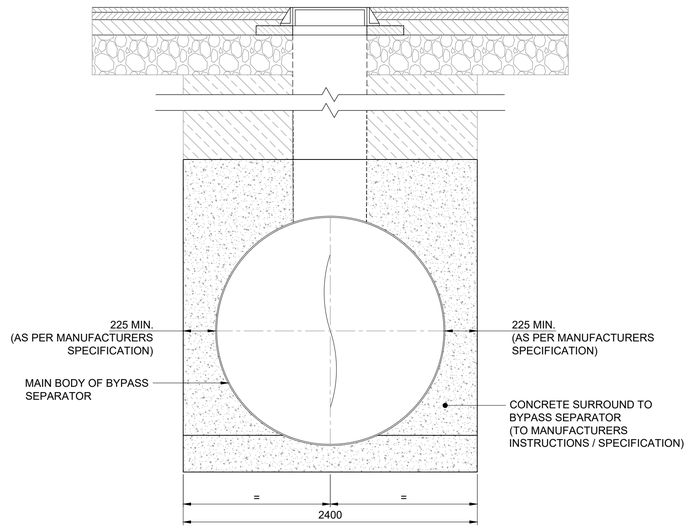

KLARGESTER NSFA030 FULL RETENTION SEPARATOR COVER SLAB - SECTION C-C

SCALE 1:25

NOTE:
ACO DRAINS MUST BE INSTALLED IN TERMS OF PROVISION FOR SUMPS AND ACCESS IN LINE WITH MANUFACTURER GUIDELINES

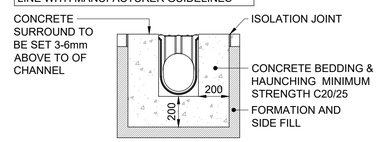

ACO CHANNEL ROADDRAIN PD200F DETAIL

SCALE 1:20

rev	date	details	drawn	checked
T02	23.01.25	TENDER ISSUE	SAH	MH
T01	13.12.24	TENDER ISSUE	KS	MH

Canham Consulting

Structural Engineers | Civil Engineers | Building Surveyors

+44 (0)1603 430650 | mail@canhamconsulting.co.uk | www.canhamconsulting.co.uk

client
SUEZ RECYCLING & RECOVERY UK Ltd

architect

project
RELIANCE STREET, MANCHESTER
HWRC DEVELOPMENT

title
PRIVATE DRAINAGE:
CONSTRUCTION DETAILS
SHEET 2 OF 2

CCL ref:	drawn	design	checked	scale	size	date
216352	GPC	MH	MH	AS SHOWN	A1 (L)	25.05.2022

status:
D2 - SUITABLE FOR TENDER

drawing number: 216352-CCL-XX-00-DR-C-3901
revision: T02

© This drawing is copyright and is not to be reproduced without the written permission of Canham Consulting Ltd

THIS DESIGN IS PRODUCED IN ACCORDANCE WITH THE CONSTRUCTION DESIGN AND MANAGEMENT REGULATIONS 2015 INCORPORATING THE APPROVED CODE OF PRACTICE. REGULATIONS 2, 9 AND 11. THOSE ALTERING THE DESIGN WITHOUT THE AUTHORITY OF CANHAM CONSULTING LTD SHOULD BE AWARE THEY MAY ALSO ASSUME RESPONSIBILITY FOR THOSE DUTIES.

PRIVATE DRAINAGE NOTES:

1. EACH DWELLING TO HAVE AT LEAST ONE SOIL VENT PIPE (SVP).
2. ANY DRAIN BRANCH CONNECTED TO A W.C. WITH NO SVP IS TO BE FITTED WITH A DURGO VALVE IN ACCORDANCE WITH THE MANUFACTURER'S RECOMMENDATIONS.
3. ALL PIPES BELOW GROUND TO BE 100mm DIAMETER (UNLESS NOTED OTHERWISE).
4. ALL FOUL DRAINS BELOW FLOOR SLABS TO BE 100mm DIAMETER AND LAID AT MINIMUM GRADIENT OF 1:40 (UNLESS NOTED OTHERWISE).
5. ALL PIPE GRADIENTS TO BE IN ACCORDANCE WITH THE BUILDING REGULATIONS APPROVED DOCUMENT H.
6. ALL MATERIALS, WORKMANSHIP, ETC, TO COMPLY WITH BUILDING REGULATIONS.
7. INSPECTION CHAMBERS TO BE WAVIN 450 IC RANGE, OR SIMILAR APPROVED.
8. PRIVATE CONNECTIONS TO THE ADOPTABLE SEWERS TO BE LAID SOFFIT TO SOFFIT. NO PLASTIC PIPES ARE TO BE CONNECTED TO ADOPTABLE MANHOLES, ALL CONNECTIONS TO THE PUBLIC SEWER MUST BE CONSTRUCTED IN VITRIFIED CLAY PIPES.

GENERAL NOTES:

1. THE DRAWINGS, DESIGN AND ALL INFORMATION CONTAINED THEREIN ARE THE SOLE COPYRIGHT OF CANHAM CONSULTING LTD AND ANY REPRODUCTION IS FORBIDDEN UNLESS PERMISSION IS OBTAINED IN WRITING.
2. ALL DRAWINGS SHALL BE READ IN CONJUNCTION WITH ALL RELEVANT CIVIL / STRUCTURAL ENGINEERING DRAWINGS, THE PROJECT SPECIFICATION AND DRAWINGS PRODUCED BY THE ARCHITECTS, SERVICE ENGINEERS AND LANDSCAPE ARCHITECTS.
3. FOR ALL SETTING OUT INFORMATION REFER TO THE ARCHITECT'S DRAWINGS AND DETAILS.
4. ANY DISCREPANCIES BETWEEN THE INFORMATION GIVEN BY THE ENGINEER, AND THAT PROVIDED BY OTHERS, MUST BE REFERRED TO THE ENGINEER BEFORE THE AFFECTED WORKS PROCEED.
5. DIMENSIONS MUST NOT BE SCALED FROM THE ENGINEER'S DRAWINGS.
6. ALL DIMENSIONS ARE IN MILLIMETRES UNLESS NOTED OTHERWISE.
7. DIMENSIONS MARKED * ARE SUBJECT TO CONFIRMATION BY SITE MEASUREMENT BEFORE CONSTRUCTION PROCEEDS.
8. THE CONTRACTOR IS TO ENSURE THE STABILITY OF EACH ELEMENT AND THE STABILITY OF THE OVERALL CONSTRUCTION UNTIL THE WORKS ARE COMPLETE.
9. ALL DESIGNS, CONNECTIONS, WORKMANSHIP AND MATERIAL ARE TO COMPLY WITH THE CURRENT BUILDING REGULATIONS AND THE LATEST RELEVANT BRITISH STANDARD SPECIFICATION AND CODES OF PRACTICE OR OTHERWISE BE TO THE SPECIFIC WRITTEN APPROVAL OF THE ENGINEER.
10. INSPECTIONS MADE BY THE LOCAL AUTHORITY, SHALL BE ARRANGED BY THE CONTRACTOR TO SUIT THEIR PROGRAMME. ANY COST ARISING OUT OF FAILING TO CARRY OUT THE WORK TO THE SATISFACTION OF THE LOCAL AUTHORITY WILL BE THE SOLE RESPONSIBILITY OF THE CONTRACTOR.
11. THE CONTRACTOR MUST MAKE THEMSELVES AWARE OF THE EXISTING UTILITIES / SERVICES LOCATED WITHIN AND ADJACENT TO THE SITE. **NO EXCAVATIONS ARE TO BE UNDERTAKEN UNTIL THE UTILITY COMPANIES HAVE BEEN INFORMED / CO-ORDINATED WITH**: DIAL-BEFORE-YOU-DIG ADVICE IS FOLLOWED AND THE AREA IS CAT SCANNED. ALL UTILITY COMPANY GUIDELINES AND HEALTH & SAFETY PROCEDURES MUST BE STRICTLY FOLLOWED.
12. FOR SIZE AND LOCATION OF ALL SERVICES REFER TO THE SERVICE ENGINEER'S AND ARCHITECT'S DRAWINGS.

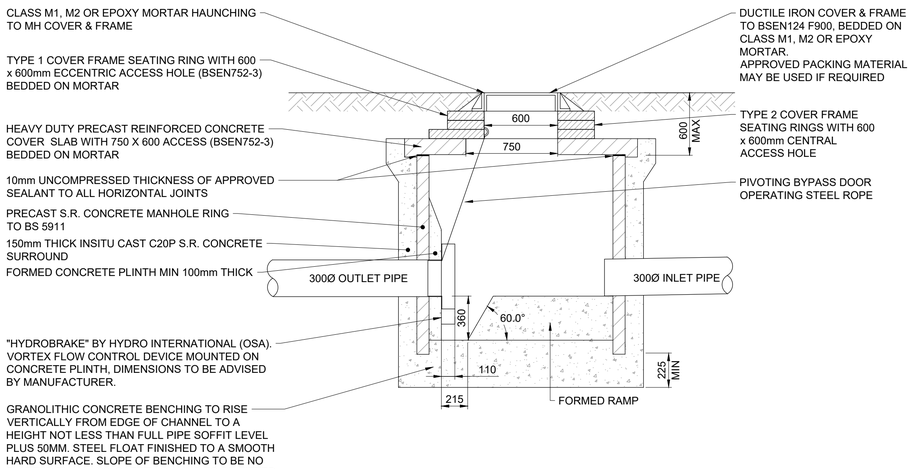

SECTION A-A
THROUGH TYPICAL FLOW CONTROL CHAMBER

SCALE 1:25

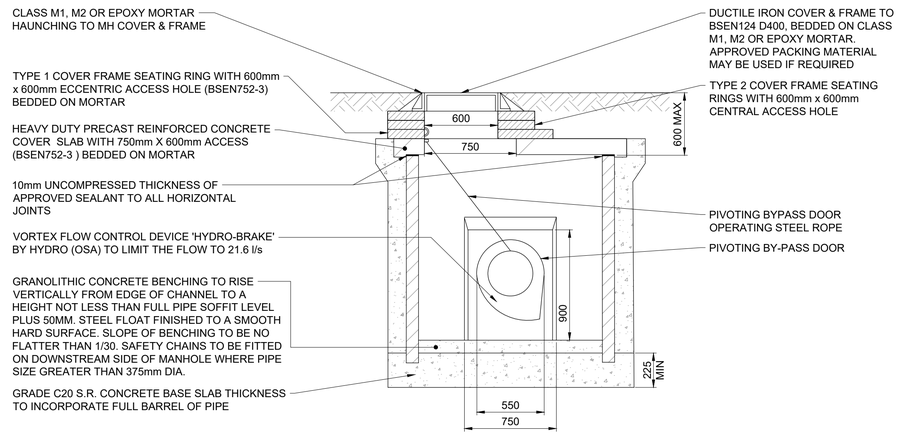

SECTION B-B
THROUGH TYPICAL FLOW CONTROL CHAMBER

SCALE 1:25

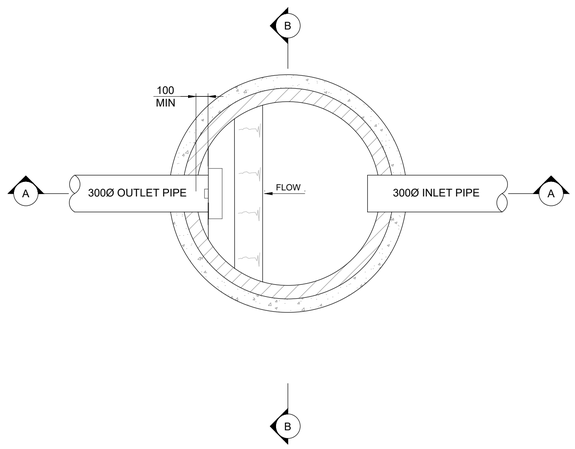

PLAN ON TYPICAL FLOW CONTROL CHAMBER

SCALE 1:25

PRELIMINARY DRAWING:
THIS DRAWING IS FOR PRELIMINARY PURPOSES ONLY AND MUST NOT BE READ AS A CONSTRUCTION ISSUE.
IT INDICATES DESIGN INTENT ONLY AND IS SUBJECT TO AMENDMENT DURING FINAL DESIGN DEVELOPMENT.

rev	date	details	drawn	checked
P01	25.05.22	PRELIMINARY ISSUE	GPC	MH

Canham Consulting

Structural Engineers | Civil Engineers | Building Surveyors

+44 (0)1603 430650 | mail@canhamconsulting.co.uk | www.canhamconsulting.co.uk

client
SUEZ RECYCLING & RECOVERY UK Ltd

architect

project
RELIANCE STREET, MANCHESTER
HWRC DEVELOPMENT

title
PRIVATE DRAINAGE:
FLOW CONTROL CHAMBER DETAILS

CCL ref:	drawn	design	checked	scale	size	date
216352	GPC	MH	MH	AS SHOWN	A1 (L)	25.05.2022

status:
S3 - SUITABLE FOR REVIEW & COMMENT

drawing number: 216352-CCL-XX-00-DR-C-3902
revision: P01

© This drawing is copyright and is not to be reproduced without the written permission of Canham Consulting Ltd

THIS DESIGN IS PRODUCED IN ACCORDANCE WITH THE CONSTRUCTION (DESIGN AND MANAGEMENT) REGULATIONS 2015 INCORPORATING THE APPROVED CODE OF PRACTICE, REGULATIONS 2, 9 AND 11. THOSE ALTERNATE THE DESIGN WITHOUT THE AUTHORITY OF CANHAM CONSULTING LTD SHOULD BE AWARE THEY MAY ALSO ASSUME RESPONSIBILITY FOR THOSE DUTIES.

STORM SEWER DESIGN by the Modified Rational Method

Design Criteria for Storm

Pipe Sizes Pvt_SW Manhole Sizes Pvt_MH

FSR Rainfall Model - England and Wales

Return Period (years)	100	PIMP (%)	100
M5-60 (mm)	18.200	Add Flow / Climate Change (%)	0
Ratio R	0.345	Minimum Backdrop Height (m)	0.200
Maximum Rainfall (mm/hr)	50	Maximum Backdrop Height (m)	1.500
Maximum Time of Concentration (mins)	30	Min Design Depth for Optimisation (m)	0.900
Foul Sewage (l/s/ha)	0.000	Min Vel for Auto Design only (m/s)	1.00
Volumetric Runoff Coeff.	0.750	Min Slope for Optimisation (1:X)	500

Designed with Level Soffits

Time Area Diagram for Storm at outfall (pipe 1.011)

Time (mins)	Area (ha)	Time (mins)	Area (ha)	Time (mins)	Area (ha)
0-4	0.267	4-8	0.231	8-12	0.001

Total Area Contributing (ha) = 0.499

Total Pipe Volume (m³) = 15.707

Time Area Diagram at outfall (pipe 5.002)

Time (mins)	Area (ha)	Time (mins)	Area (ha)
0-4	0.009	4-8	0.002

Total Area Contributing (ha) = 0.011

Total Pipe Volume (m³) = 0.108

Time Area Diagram at outfall (pipe 6.002)

Time (mins)	Area (ha)	Time (mins)	Area (ha)
0-4	0.029	4-8	0.009

Total Area Contributing (ha) = 0.038

Total Pipe Volume (m³) = 0.146

Network Design Table for Storm

©1982-2020 Innovyze

Network Design Table for Storm

PN	Length (m)	Fall (m)	Slope (1:X)	I.Area (ha)	T.E. (mins)	Base Flow (l/s)	k (mm)	HYD SECT	DIA (mm)	Section Type	Auto Design

Network Results Table

PN	Rain (mm/hr)	T.C. (mins)	US/IL (m)	Σ I.Area (ha)	Σ Base Flow (l/s)	Foul (l/s)	Add Flow (l/s)	Vel (m/s)	Cap (l/s)	Flow (l/s)

©1982-2020 Innovyze

Network Design Table for Storm

PN	Length (m)	Fall (m)	Slope (1:X)	I.Area (ha)	T.E. (mins)	Base Flow (l/s)	k (mm)	HYD SECT	DIA (mm)	Section Type	Auto Design
1.000	19.707	0.333	59.2	0.021	5.00	0.0	0.600	o	225	Pipe/Conduit	
1.001	21.837	0.377	58.0	0.031	0.00	0.0	0.600	o	225	Pipe/Conduit	
1.002	20.146	0.081	250.0	0.036	0.00	0.0	0.600	o	225	Pipe/Conduit	
1.003	18.115	0.072	250.0	0.032	0.00	0.0	0.600	o	225	Pipe/Conduit	
1.004	21.145	0.430	49.1	0.019	0.00	0.0	0.600	o	225	Pipe/Conduit	
2.000	32.882	0.556	59.1	0.029	5.00	0.0	0.600	o	225	Pipe/Conduit	
2.001	37.053	0.627	59.1	0.026	0.00	0.0	0.600	o	225	Pipe/Conduit	
2.002	10.937	0.428	25.5	0.020	0.00	0.0	0.600	o	225	Pipe/Conduit	
1.005	8.374	0.033	250.0	0.028	0.00	0.0	0.600	o	300	Pipe/Conduit	
1.006	8.919	0.567	15.7	0.029	0.00	0.0	0.600	o	300	Pipe/Conduit	
3.000	15.946	0.518	30.8	0.024	5.00	0.0	0.600	o	150	Pipe/Conduit	
3.001	15.192	0.343	44.3	0.024	0.00	0.0	0.600	o	150	Pipe/Conduit	
1.007	28.463	0.114	250.0	0.034	0.00	0.0	0.600	o	300	Pipe/Conduit	
1.008	36.245	0.145	250.0	0.057	0.00	0.0	0.600	o	300	Pipe/Conduit	
4.000	4.063	0.068	59.7	0.031	5.00	0.0	0.600	o	100	Pipe/Conduit	
1.009	8.198	0.033	250.0	0.057	0.00	0.0	0.600	o	300	Pipe/Conduit	

Network Results Table

PN	Rain (mm/hr)	T.C. (mins)	US/IL (m)	Σ I.Area (ha)	Σ Base Flow (l/s)	Foul (l/s)	Add Flow (l/s)	Vel (m/s)	Cap (l/s)	Flow (l/s)
1.000	50.00	5.19	85.676	0.021	0.0	0.0	0.0	1.70	67.7	2.8
1.001	50.00	5.40	85.343	0.052	0.0	0.0	0.0	1.72	68.4	7.1
1.002	50.00	5.81	84.966	0.088	0.0	0.0	0.0	0.82	32.7	11.9
1.003	50.00	6.18	84.886	0.119	0.0	0.0	0.0	0.82	32.7	16.2
1.004	50.00	6.37	84.813	0.139	0.0	0.0	0.0	1.87	74.4	18.8
2.000	50.00	5.32	85.994	0.029	0.0	0.0	0.0	1.70	67.7	4.0
2.001	50.00	5.68	85.438	0.055	0.0	0.0	0.0	1.70	67.7	7.5
2.002	50.00	5.75	84.811	0.076	0.0	0.0	0.0	2.60	103.4	10.3
1.005	50.00	6.51	84.308	0.243	0.0	0.0	0.0	0.99	70.0	32.9
1.006	50.00	6.55	84.274	0.272	0.0	0.0	0.0	3.98	281.5	36.9
3.000	50.00	5.15	84.719	0.024	0.0	0.0	0.0	1.82	32.2	3.3
3.001	50.00	5.31	84.201	0.048	0.0	0.0	0.0	1.52	26.8	6.5
1.007	50.00	7.03	83.708	0.354	0.0	0.0	0.0	0.99	70.0	47.9
1.008	50.00	7.64	83.594	0.411	0.0	0.0	0.0	0.99	70.0	55.6
4.000	50.00	5.07	83.717	0.031	0.0	0.0	0.0	1.00	7.8	4.2
1.009	50.00	7.77	83.449	0.499	0.0	0.0	0.0	0.99	70.0	67.6

©1982-2020 Innovyze

Network Design Table for Storm

PN	Length (m)	Fall (m)	Slope (1:X)	I.Area (ha)	T.E. (mins)	Base Flow (l/s)	k (mm)	HYD SECT	DIA (mm)	Section Type	Auto Design
1.010	7.678	0.031	250.0	0.000	0.00	0.0	0.600	o	300	Pipe/Conduit	
1.011	13.823	0.055	250.0	0.000	0.00	0.0	0.600	o	300	Pipe/Conduit	
5.000	8.832	0.149	59.1	0.006	5.00	0.0	0.600	o	100	Pipe/Conduit	
5.001	2.226	0.071	31.3	0.005	0.00	0.0	0.600	o	100	Pipe/Conduit	
5.002	2.645	0.011	234.4	0.000	0.00	0.0	0.600	o	100	Pipe/Conduit	
6.000	2.285	0.039	59.1	0.022	5.00	0.0	0.600	o	100	Pipe/Conduit	
6.001	3.224	0.055	59.1	0.000	0.00	0.0	0.600	o	100	Pipe/Conduit	
7.000	2.179	0.218	10.0	0.016	5.00	0.0	0.600	o	100	Pipe/Conduit	
7.001	6.229	0.649	9.6	0.000	0.00	0.0	0.600	o	100	Pipe/Conduit	
6.002	4.697	0.079	59.1	0.000	0.00	0.0	0.600	o	100	Pipe/Conduit	

Network Results Table

PN	Rain (mm/hr)	T.C. (mins)	US/IL (m)	Σ I.Area (ha)	Σ Base Flow (l/s)	Foul (l/s)	Add Flow (l/s)	Vel (m/s)	Cap (l/s)	Flow (l/s)
1.010	50.00	7.90	83.416	0.499	0.0	0.0	0.0	0.99	70.0	67.6
1.011	50.00	8.14	83.385	0.499	0.0	0.0	0.0	0.99	70.0	67.6
5.000	50.00	5.15	85.679	0.006	0.0	0.0	0.0	1.00	7.9	0.8
5.001	50.00	5.17	85.529	0.011	0.0	0.0	0.0	1.38	10.9	1.4
5.002	50.00	5.26	85.458	0.011	0.0	0.0	0.0	0.50	3.9	1.4
6.000	50.00	5.04	83.596	0.022	0.0	0.0	0.0	1.00	7.9	3.0
6.001	50.00	5.09	83.557	0.022	0.0	0.0	0.0	1.00	7.9	3.0
7.000	50.00	5.01	84.369	0.016	0.0	0.0	0.0	2.46	19.3	2.2
7.001	50.00	5.06	84.151	0.016	0.0	0.0	0.0	2.51	19.7	2.2
6.002	50.00	5.17	83.503	0.038	0.0	0.0	0.0	1.00	7.9	5.2

©1982-2020 Innovyze

Manhole Schedules for Storm

MH Name	MH CL (m)	MH Depth (m)	MH Connection	MH Diam.,L*W (mm)	Pipe Out PN	Pipe Out Invert Level (m)	Pipe Out Diameter (mm)	Pipes In PN	Pipes In Invert Level (m)	Pipes In Diameter (mm)	Backdrop (mm)
1	86.676	1.000	Open Manhole	1050	1.000	85.676	225				
2	86.815	1.472	Open Manhole	1050	1.001	85.343	225	1.000	85.343	225	
3	86.696	1.730	Open Manhole	1050	1.002	84.966	225	1.001	84.966	225	
4	86.393	1.507	Open Manhole	1050	1.003	84.886	225	1.002	84.886	225	
5	86.063	1.250	Open Manhole	1050	1.004	84.813	225	1.003	84.813	225	
6	86.994	1.000	Open Manhole	1050	2.000	85.994	225				
7	86.593	1.155	Open Manhole	1050	2.001	85.438	225	2.000	85.438	225	
8	86.281	1.470	Open Manhole	1050	2.002	84.811	225	2.001	84.811	225	
9	85.508	1.200	Open Manhole	1200	1.005	84.308	300	1.004	84.383	225	
								2.002	84.383	225	
10	85.804	1.529	Open Manhole	1050	1.006	84.274	300	1.005	84.274	300	
11	85.719	1.000	Open Manhole	1050	3.000	84.719	150				
12	85.201	1.000	Open Manhole	1050	3.001	84.201	150	3.000	84.201	150	
13	84.908	1.200	Open Manhole	1050	1.007	83.708	300	1.006	83.708	300	
								3.001	83.858	150	
14	85.196	1.602	Open Manhole	1050	1.008	83.594	300	1.007	83.594	300	
15	85.635	1.918	Open Manhole	1050	4.000	83.717	100				
16	85.656	2.207	Open Manhole	1050	1.009	83.449	300	1.008	83.449	300	
								4.000	83.649	100	
16A	85.862	2.446	Open Manhole	1200	1.010	83.416	300	1.009	83.416	300	
17	85.972	2.586	Open Manhole	1200	1.011	83.385	300	1.010	83.385	300	
	85.839	2.509	Open Manhole	0		OUTFALL		1.011	83.330	300	
18	86.679	1.000	Open Manhole	450	5.000	85.679	100				
19	86.669	1.140	Open Manhole	450	5.001	85.529	100	5.000	85.529	100	
20	86.812	1.354	Open Manhole	450	5.002	85.458	100	5.001	85.458	100	
	86.966	1.519	Open Manhole	0		OUTFALL		5.002	85.447	100	
21	84.596	1.000	Open Manhole	600	6.000	83.596	100				
22	84.735	1.178	Open Manhole	450	6.001	83.557	100	6.000	83.557	100	
23	85.369	1.000	Open Manhole	600	7.000	84.369	100				
24	85.445	1.294	Open Manhole	450	7.001	84.151	100	7.000	84.151	100	
25	84.912	1.410	Open Manhole	450	6.002	83.503	100	6.001	83.503	100	
								7.001	83.503	100	
	84.622	1.198	Open Manhole	0		OUTFALL		6.002	83.423	100	

©1982-2020 Innovyze

Manhole Schedules for Storm

MH Name	Manhole Easting (m)	Manhole Northing (m)	Intersection Easting (m)	Intersection Northing (m)	Manhole Access	Layout (North)
1	388130.304	401067.351	388130.304	401067.351	Required	
2	388111.216	401072.250	388111.216	401072.250	Required	
3	388089.892	401076.956	388089.892	401076.956	Required	
4	388070.389	401071.906	388070.389	401071.906	Required	
5	388052.786	401067.631	388052.786	401067.631	Required	
6	388123.264	401056.211	388123.264	401056.211	Required	
7	388091.386	401064.276	388091.386	401064.276	Required	
8	388055.476	401055.146	388055.476	401055.146	Required	
9	388048.185	401046.993	388048.185	401046.993	Required	
10	388056.326	401045.028	388056.326	401045.028	Required	
11	388050.327	401027.731	388050.327	401027.731	Required	
12	388065.621	401032.246	388065.621	401032.246	Required	
13	388064.918	401047.421	388064.918	401047.421	Required	
14	388092.490	401054.488	388092.490	401054.488	Required	
15	388129.259	401044.350	388129.259	401044.350	Required	

©1982-2020 Innovyze

Manhole Schedules for Storm

MH Name	Manhole Easting (m)	Manhole Northing (m)	Intersection Easting (m)	Intersection Northing (m)	Manhole Access	Layout (North)
16	388126.339	401041.526	388126.339	401041.526	Required	
16A	388134.317	401039.638	388134.317	401039.638	Required	
17	388134.304	401031.960	388134.304	401031.960	Required	
	388120.481	401031.945			No Entry	
18	388137.549	401046.843	388137.549	401046.843	Required	
19	388137.506	401055.674	388137.506	401055.674	Required	
20	388137.201	401057.879	388137.201	401057.879	Required	
	388137.078	401060.521			No Entry	
21	388032.112	401067.831	388032.112	401067.831	Required	
22	388032.759	401065.639	388032.759	401065.639	Required	
23	388039.740	401057.368	388039.740	401057.368	Required	
24	388039.164	401059.470	388039.164	401059.470	Required	
25	388033.765	401062.576	388033.765	401062.576	Required	
	388029.339	401061.004			No Entry	

©1982-2020 Innovyze

PIPELINE SCHEDULES for Storm

Upstream Manhole

PN	Hyd Sect	Diam (mm)	MH Name	C.Level (m)	I.Level (m)	D.Depth (m)	MH Connection	MH DIAM., L*W (mm)
1.000	o	225	1	86.676	85.676	0.775	Open Manhole	1050
1.001	o	225	2	86.815	85.343	1.247	Open Manhole	1050
1.002	o	225	3	86.696	84.966	1.505	Open Manhole	1050
1.003	o	225	4	86.393	84.886	1.282	Open Manhole	1050
1.004	o	225	5	86.063	84.813	1.025	Open Manhole	1050
2.000	o	225	6	86.994	85.994	0.775	Open Manhole	1050
2.001	o	225	7	86.593	85.438	0.930	Open Manhole	1050
2.002	o	225	8	86.281	84.811	1.245	Open Manhole	1050
1.005	o	300	9	85.508	84.308	0.900	Open Manhole	1200
1.006	o	300	10	85.804	84.274	1.229	Open Manhole	1050
3.000	o	150	11	85.719	84.719	0.850	Open Manhole	1050
3.001	o	150	12	85.201	84.201	0.850	Open Manhole	1050
1.007	o	300	13	84.908	83.708	0.900	Open Manhole	1050
1.008	o	300	14	85.196	83.594	1.302	Open Manhole	1050
4.000	o	100	15	85.635	83.717	1.818	Open Manhole	1050

Downstream Manhole

PN	Length (m)	Slope (1:X)	MH Name	C.Level (m)	I.Level (m)	D.Depth (m)	MH Connection	MH DIAM., L*W (mm)
1.000	19.707	59.2	2	86.815	85.343	1.247	Open Manhole	1050
1.001	21.837	58.0	3	86.696	84.966	1.505	Open Manhole	1050
1.002	20.146	250.0	4	86.393	84.886	1.282	Open Manhole	1050
1.003	18.115	250.0	5	86.063	84.813	1.025	Open Manhole	1050
1.004	21.145	49.1	9	85.508	84.383	0.900	Open Manhole	1200
2.000	32.882	59.1	7	86.593	85.438	0.930	Open Manhole	1050
2.001	37.053	59.1	8	86.281	84.811	1.245	Open Manhole	1050
2.002	10.937	25.5	9	85.508	84.383	0.900	Open Manhole	1200
1.005	8.374	250.0	10	85.804	84.274	1.229	Open Manhole	1050
1.006	8.919	15.7	13	84.908	83.708	0.900	Open Manhole	1050
3.000	15.946	30.8	12	85.201	84.201	0.850	Open Manhole	1050
3.001	15.192	44.3	13	84.908	83.858	0.900	Open Manhole	1050
1.007	28.463	250.0	14	85.196	83.594	1.302	Open Manhole	1050
1.008	36.245	250.0	16	85.656	83.449	1.907	Open Manhole	1050
4.000	4.063	59.7	16	85.656	83.649	1.907	Open Manhole	1050

©1982-2020 Innovyze

PIPELINE SCHEDULES for Storm

Upstream Manhole

PN	Hyd Sect	Diam (mm)	MH Name	C.Level (m)	I.Level (m)	D.Depth (m)	MH Connection	MH DIAM., L*W (mm)
1.009	o	300	16	85.656	83.449	1.907	Open Manhole	1050
1.010	o	300	16A	85.862	83.416	2.146	Open Manhole	1200
1.011	o	300	17	85.972	83.385	2.286	Open Manhole	1200
5.000	o	100	18	86.679	85.679	0.900	Open Manhole	450
5.001	o	100	19	86.669	85.529	1.040	Open Manhole	450
5.002	o	100	20	86.812	85.458	1.254	Open Manhole	450
6.000	o	100	21	84.596	83.596	0.900	Open Manhole	600
6.001	o	100	22	84.735	83.557	1.078	Open Manhole	450
7.000	o	100	23	85.369	84.369	0.900	Open Manhole	600
7.001	o	100	24	85.445	84.151	1.194	Open Manhole	450
6.002	o	100	25	84.912	83.503	1.310	Open Manhole	450

Downstream Manhole

PN	Length (m)	Slope (1:X)	MH Name	C.Level (m)	I.Level (m)	D.Depth (m)	MH Connection	MH DIAM., L*W (mm)
1.009	8.198	250.0	16A	85.862	83.416	2.146	Open Manhole	1200
1.010	7.678	250.0	17	85.972	83.385	2.286	Open Manhole	1200
1.011	13.823	250.0		85.839	83.330	2.209	Open Manhole	0
5.000	8.832	59.1	19	86.669	85.529	1.040	Open Manhole	450
5.001	2.226	31.3	20	86.812	85.458	1.254	Open Manhole	450
5.002	2.645	234.4		86.966	85.447	1.419	Open Manhole	0
6.000	2.285	59.1	22	84.735	83.557	1.078	Open Manhole	450
6.001	3.224	59.1	25	84.912	83.503	1.310	Open Manhole	450
7.000	2.179	10.0	24	85.445	84.151	1.194	Open Manhole	450
7.001	6.229	9.6	25	84.912	83.503	1.310	Open Manhole	450
6.002	4.697	59.1		84.622	83.423	1.098	Open Manhole	0

©1982-2020 Innovyze

Area Summary for Storm

Pipe Number	PIMP Type	PIMP Name	PIMP (%)	Gross Area (ha)	Imp. Area (ha)	Pipe Total (ha)
1.000	User	-	100	0.021	0.021	0.021
1.001	User	-	100	0.031	0.031	0.031
1.002	User	-	100	0.036	0.036	0.036
1.003	User	-	100	0.032	0.032	0.032
1.004	User	-	100	0.019	0.019	0.019
2.000	User	-	100	0.029	0.029	0.029
2.001	User	-	100	0.026	0.026	0.026
2.002	User	-	100	0.020	0.020	0.020
1.005	User	-	100	0.028	0.028	0.028
1.006	User	-	100	0.029	0.029	0.029
3.000	User	-	100	0.024	0.024	0.024
3.001	User	-	100	0.024	0.024	0.024
1.007	User	-	100	0.034	0.034	0.034
1.008	User	-	100	0.057	0.057	0.057
4.000	User	-	100	0.031	0.031	0.031
1.009	User	-	100	0.057	0.057	0.057
1.010	-	-	100	0.000	0.000	0.000
1.011	-	-	100	0.000	0.000	0.000
5.000	User	-	100	0.006	0.006	0.006
5.001	User	-	100	0.005	0.005	0.005
5.002	-	-	100	0.000	0.000	0.000
6.000	User	-	100	0.022	0.022	0.022
6.001	-	-	100	0.000	0.000	0.000
7.000	User	-	100	0.016	0.016	0.016
7.001	-	-	100	0.000	0.000	0.000
6.002	-	-	100	0.000	0.000	0.000
				Total	Total	Total
				0.548	0.548	0.548

©1982-2020 Innovyze

Network Classifications for Storm

PN	USMH Name	Pipe Dia (mm)	Min Cover Depth (m)	Max Cover Depth (m)	Pipe Type	MH Dia (mm)	MH Width (mm)	MH Ring Depth (m)	MH Type
1.000	1	225	0.775	1.247	Unclassified	1050	0	0.775	Unclassified
1.001	2	225	1.247	1.540	Unclassified	1050	0	1.247	Unclassified
1.002	3	225	1.282	1.505	Unclassified	1050	0	1.505	Unclassified
1.003	4	225	1.025	1.282	Unclassified	1050	0	1.282	Unclassified
1.004	5	225	0.868	1.214	Unclassified	1050	0	1.025	Unclassified
2.000	6	225	0.775	0.930	Unclassified	1050	0	0.775	Unclassified
2.001	7	225	0.930	1.245	Unclassified	1050	0	0.930	Unclassified
2.002	8	225	0.743	1.245	Unclassified	1050	0	1.245	Unclassified
1.005	9	300	0.900	1.229	Unclassified	1200	0	0.900	Unclassified
1.006	10	300	0.790	1.229	Unclassified	1050	0	1.229	Unclassified
3.000	11	150	0.712	1.034	Unclassified	1050	0	0.850	Unclassified
3.001	12	150	0.850	0.900	Unclassified	1050	0	0.850	Unclassified
1.007	13	300	0.900	1.302	Unclassified	1050	0	0.900	Unclassified
1.008	14	300	1.302	1.907	Unclassified	1050	0	1.302	Unclassified
4.000	15	100	1.818	1.907	Unclassified	1050	0	1.818	Unclassified
1.009	16	300	1.907	2.146	Unclassified	1050	0	1.907	Unclassified
1.010	16A	300	2.146	2.286	Unclassified	1200	0	2.146	Unclassified
1.011	17	300	2.152	2.286	Unclassified	1200	0	2.286	Unclassified
5.000	18	100	0.877	1.040	Unclassified	450	0	0.900	Unclassified
5.001	19	100	1.040	1.254	Unclassified	450	0	1.040	Unclassified
5.002	20	100	1.254	1.419	Unclassified	450	0	1.254	Unclassified
6.000	21	100	0.900	1.078	Unclassified	600	0	0.900	Unclassified
6.001	22	100	1.078	1.310	Unclassified	450	0	1.078	Unclassified
7.000	23	100	0.900	1.194	Unclassified	600	0	0.900	Unclassified
7.001	24	100	1.194	1.310	Unclassified	450	0	1.194	Unclassified
6.002	25	100	1.098	1.310	Unclassified	450	0	1.310	Unclassified

Free Flowing Outfall Details for Storm

Outfall Pipe Number	Outfall Name	C. Level (m)	I. Level (m)	Min I. Level (m)	D,L (mm)	W (mm)
1.011		85.839	83.330	0.000	0	0

Free Flowing Outfall Details for Storm

Outfall Pipe Number	Outfall Name	C. Level (m)	I. Level (m)	Min I. Level (m)	D,L (mm)	W (mm)
5.002		86.966	85.447	0.000	0	0

©1982-2020 Innovyze

Free Flowing Outfall Details for Storm

Outfall Pipe Number	Outfall Name	C. Level (m)	I. Level (m)	Min I. Level (m)	D,L (mm)	W (mm)
6.002		84.622	83.423	0.000	0	0

Simulation Criteria for Storm

Volumetric Runoff Coeff	0.750	Additional Flow - % of Total Flow	0.000
Areal Reduction Factor	1.000	MADD Factor * 10m³/ha Storage	2.000
Hot Start (mins)	0	Inlet Coeffiecient	0.800
Hot Start Level (mm)	0	Flow per Person per Day (l/per/day)	0.000
Manhole Headloss Coeff (Global)	0.500	Run Time (mins)	60
Foul Sewage per hectare (l/s)	0.000	Output Interval (mins)	1

Number of Input Hydrographs	0	Number of Storage Structures	4
Number of Online Controls	4	Number of Time/Area Diagrams	0
Number of Offline Controls	0	Number of Real Time Controls	0

Synthetic Rainfall Details

Rainfall Model	FSR	Profile Type	Summer
Return Period (years)	100	Cv (Summer)	0.750
Region	England and Wales	Cv (Winter)	0.840
M5-60 (mm)	18.200	Storm Duration (mins)	30
Ratio R	0.345		

©1982-2020 Innovyze

Online Controls for Storm

Orifice Manhole: 10, DS/PN: 1.006, Volume (m³): 1.8

Diameter (m) 0.079 Discharge Coefficient 0.600 Invert Level (m) 84.274

Hydro-Brake® Optimum Manhole: 16, DS/PN: 1.009, Volume (m³): 4.4

Unit Reference	MD-SHE-0191-2160-2000-2160
Design Head (m)	2.000
Design Flow (l/s)	21.6
Flush-Flo™	Calculated
Objective	Minimise upstream storage
Application	Surface
Sump Available	Yes
Diameter (mm)	191
Invert Level (m)	83.449
Minimum Outlet Pipe Diameter (mm)	225
Suggested Manhole Diameter (mm)	1800

Control Points	Head (m)	Flow (l/s)
Design Point (Calculated)	2.000	21.6
Flush-Flo™	0.586	21.6
Kick-Flo®	1.244	17.2
Mean Flow over Head Range	-	18.8

The hydrological calculations have been based on the Head/Discharge relationship for the Hydro-Brake® Optimum as specified. Should another type of control device other than a Hydro-Brake Optimum® be utilised then these storage routing calculations will be invalidated

Depth (m)	Flow (l/s)	Depth (m)	Flow (l/s)	Depth (m)	Flow (l/s)	Depth (m)	Flow (l/s)
0.100	6.6	1.200	18.1	3.000	26.2	7.000	39.4
0.200	17.6	1.400	18.2	3.500	28.2	7.500	40.8
0.300	20.0	1.600	19.4	4.000	30.1	8.000	42.1
0.400	21.1	1.800	20.5	4.500	31.9	8.500	43.3
0.500	21.5	2.000	21.6	5.000	33.5	9.000	44.5
0.600	21.6	2.200	22.6	5.500	35.1	9.500	45.7
0.800	21.2	2.400	23.6	6.000	36.6		
1.000	20.3	2.600	24.5	6.500	38.0		

Pump Manhole: 20, DS/PN: 5.002, Volume (m³): 0.2

Invert Level (m) 85.458

Pump Manhole: 25, DS/PN: 6.002, Volume (m³): 0.3

Invert Level (m) 83.503

©1982-2020 Innovyze

Storage Structures for Storm

Porous Car Park Manhole: 9, DS/PN: 1.005

Infiltration Coefficient Base (m/hr)	0.00000	Width (m)	10.0
Membrane Percolation (mm/hr)	1000	Length (m)	46.0
Max Percolation (l/s)	127.8	Slope (1:X)	200.0
Safety Factor	1.5	Depression Storage (mm)	5
Porosity	0.30	Evaporation (mm/day)	3
Invert Level (m)	84.778	Membrane Depth (mm)	150

Cellular Storage Manhole: 13, DS/PN: 1.007

Invert Level (m)	82.708	Safety Factor	1.5
Infiltration Coefficient Base (m/hr)	0.00000	Porosity	0.95
Infiltration Coefficient Side (m/hr)	0.00000		

Depth (m)	Area (m²)	Inf. Area (m²)	Depth (m)	Area (m²)	Inf. Area (m²)
0.000	95.0	95.0	1.201	0.0	141.8
1.200	95.0	141.8			

Cellular Storage Manhole: 20, DS/PN: 5.002

Invert Level (m)	85.500	Safety Factor	1.5
Infiltration Coefficient Base (m/hr)	0.00000	Porosity	0.35
Infiltration Coefficient Side (m/hr)	0.00000		

Depth (m)	Area (m²)	Inf. Area (m²)	Depth (m)	Area (m²)	Inf. Area (m²)
0.000	75.0	75.0	0.401	0.0	91.0
0.400	75.0	91.0			

Cellular Storage Manhole: 25, DS/PN: 6.002

Invert Level (m)	83.598	Safety Factor	1.5
Infiltration Coefficient Base (m/hr)	0.00360	Porosity	0.35
Infiltration Coefficient Side (m/hr)	0.00360		

Depth (m)	Area (m²)	Inf. Area (m²)	Depth (m)	Area (m²)	Inf. Area (m²)
0.000	140.0	140.0	0.601	0.0	168.8
0.600	140.0	168.8			

©1982-2020 Innovyze

Summary of Critical Results by Maximum Level (Rank 1) for Storm

Simulation Criteria

Areal Reduction Factor 1.000 Additional Flow - % of Total Flow 0.000
Hot Start (mins) 0 MADD Factor * 10m³/ha Storage 2.000
Hot Start Level (mm) 0 Inlet Coeffiecient 0.800
Manhole Headloss Coeff (Global) 0.500 Flow per Person per Day (l/per/day) 0.000
Foul Sewage per hectare (l/s) 0.000

Number of Input Hydrographs 0 Number of Storage Structures 4
Number of Online Controls 4 Number of Time/Area Diagrams 0
Number of Offline Controls 0 Number of Real Time Controls 0

Synthetic Rainfall Details

Rainfall Model FSR Ratio R 0.348
Region England and Wales Cv (Summer) 0.750
M5-60 (mm) 18.100 Cv (Winter) 0.840

Margin for Flood Risk Warning (mm) 450.0
Analysis Timestep 2.5 Second Increment (Extended)
DTS Status OFF
DVD Status ON
Inertia Status ON

Profile(s) Summer and Winter
Duration(s) (mins) 15, 30, 60, 120, 180, 240, 360, 480, 600, 720, 960, 1440
Return Period(s) (years) 1
Climate Change (%) 0

PN	US/MH Name	Storm	Return Period	Climate Change	First (X) Surcharge	First (Y) Flood	First (Z) Overflow	Overflow Act.	Water Level (m)
1.000	1	15 Winter	1	+0%					85.705
1.001	2	15 Winter	1	+0%					85.389
1.002	3	15 Winter	1	+0%					85.053
1.003	4	15 Winter	1	+0%					84.987
1.004	5	30 Winter	1	+0%					84.899
2.000	6	15 Winter	1	+0%					86.028
2.001	7	15 Winter	1	+0%					85.485
2.002	8	30 Winter	1	+0%					84.890
1.005	9	30 Winter	1	+0%	1/15 Summer				84.886
1.006	10	30 Winter	1	+0%	1/15 Summer				84.889
3.000	11	15 Winter	1	+0%					84.750
3.001	12	15 Winter	1	+0%					84.248
1.007	13	1440 Winter	1	+0%					83.716
1.008	14	15 Winter	1	+0%					83.682
4.000	15	15 Winter	1	+0%					83.771
1.009	16	15 Winter	1	+0%					83.671
1.010	16A	15 Winter	1	+0%					83.516
1.011	17	15 Winter	1	+0%					83.479
5.000	18	15 Winter	1	+0%					85.700

©1982-2020 Innovyze

Summary of Critical Results by Maximum Level (Rank 1) for Storm

PN	US/MH Name	Surcharged Depth (m)	Flooded Volume (m³)	Flow / Cap.	Overflow (l/s)	Half Drain Time (mins)	Pipe Flow (l/s)	Status	Level Exceeded
1.000	1	-0.196	0.000	0.04			2.5	OK	
1.001	2	-0.179	0.000	0.09			5.7	OK	
1.002	3	-0.138	0.000	0.31			9.3	OK	
1.003	4	-0.123	0.000	0.42			12.3	OK	
1.004	5	-0.139	0.000	0.18			12.0	OK	
2.000	6	-0.191	0.000	0.05			3.5	OK	
2.001	7	-0.178	0.000	0.10			6.1	OK	
2.002	8	-0.146	0.000	0.08			6.7	OK	
1.005	9	0.278	0.000	0.18		11	9.5	SURCHARGED	
1.006	10	0.315	0.000	0.05			9.8	SURCHARGED	
3.000	11	-0.119	0.000	0.10			2.9	OK	
3.001	12	-0.103	0.000	0.21			5.2	OK	
1.007	13	-0.292	0.000	0.01			0.3	OK	
1.008	14	-0.212	0.000	0.08			5.1	OK	
4.000	15	-0.046	0.000	0.56			3.7	OK	
1.009	16	-0.078	0.000	0.24			12.5	OK	
1.010	16A	-0.200	0.000	0.24			12.5	OK	
1.011	17	-0.206	0.000	0.22			12.5	OK	
5.000	18	-0.079	0.000	0.10			0.7	OK	

©1982-2020 Innovyze

Summary of Critical Results by Maximum Level (Rank 1) for Storm

PN	US/MH Name	Storm	Return Period	Climate Change	First (X) Surcharge	First (Y) Flood	First (Z) Overflow	Overflow Act.	Water Level (m)
5.001	19	1440 Winter	1	+0%					85.608
5.002	20	1440 Winter	1	+0%	1/240 Winter				85.608
6.000	21	960 Winter	1	+0%	1/240 Winter				83.712
6.001	22	960 Winter	1	+0%	1/60 Summer				83.712
7.000	23	15 Winter	1	+0%					84.395
7.001	24	15 Winter	1	+0%					84.173
6.002	25	960 Winter	1	+0%	1/15 Summer				83.711

PN	US/MH Name	Surcharged Depth (m)	Flooded Volume (m^3)	Flow / Cap.	Overflow (l/s)	Half Drain Time (mins)	Pipe Flow (l/s)	Status	Level Exceeded
5.001	19	-0.021	0.000	0.01			0.1	OK	
5.002	20	0.050	0.000	0.00			0.0	SURCHARGED	
6.000	21	0.016	0.000	0.04			0.2	SURCHARGED	
6.001	22	0.054	0.000	0.04			0.2	SURCHARGED	
7.000	23	-0.074	0.000	0.15			1.9	OK	
7.001	24	-0.078	0.000	0.11			1.9	OK	
6.002	25	0.109	0.000	0.00		658	0.0	SURCHARGED	

©1982-2020 Innovyze

STORM SEWER DESIGN by the Modified Rational Method

Design Criteria for Storm

Pipe Sizes Pvt_SW Manhole Sizes Pvt_MH

FSR Rainfall Model - England and Wales

Return Period (years)	100	PIMP (%)	100
M5-60 (mm)	18.200	Add Flow / Climate Change (%)	0
Ratio R	0.345	Minimum Backdrop Height (m)	0.200
Maximum Rainfall (mm/hr)	50	Maximum Backdrop Height (m)	1.500
Maximum Time of Concentration (mins)	30	Min Design Depth for Optimisation (m)	0.900
Foul Sewage (l/s/ha)	0.000	Min Vel for Auto Design only (m/s)	1.00
Volumetric Runoff Coeff.	0.750	Min Slope for Optimisation (1:X)	500

Designed with Level Soffits

Time Area Diagram for Storm at outfall (pipe 1.011)

Time (mins)	Area (ha)	Time (mins)	Area (ha)	Time (mins)	Area (ha)
0-4	0.267	4-8	0.231	8-12	0.001

Total Area Contributing (ha) = 0.499

Total Pipe Volume (m³) = 15.707

Time Area Diagram at outfall (pipe 5.002)

Time (mins)	Area (ha)	Time (mins)	Area (ha)
0-4	0.009	4-8	0.002

Total Area Contributing (ha) = 0.011

Total Pipe Volume (m³) = 0.108

Time Area Diagram at outfall (pipe 6.002)

Time (mins)	Area (ha)	Time (mins)	Area (ha)
0-4	0.029	4-8	0.009

Total Area Contributing (ha) = 0.038

Total Pipe Volume (m³) = 0.146

Network Design Table for Storm

©1982-2020 Innovyze

Network Design Table for Storm

PN	Length (m)	Fall (m)	Slope (1:X)	I.Area (ha)	T.E. (mins)	Base Flow (l/s)	k (mm)	HYD SECT	DIA (mm)	Section Type	Auto Design

Network Results Table

PN	Rain (mm/hr)	T.C. (mins)	US/IL (m)	Σ I.Area (ha)	Σ Base Flow (l/s)	Foul (l/s)	Add Flow (l/s)	Vel (m/s)	Cap (l/s)	Flow (l/s)

©1982-2020 Innovyze

Network Design Table for Storm

PN	Length (m)	Fall (m)	Slope (1:X)	I.Area (ha)	T.E. (mins)	Base Flow (l/s)	k (mm)	HYD SECT	DIA (mm)	Section Type	Auto Design
1.000	19.707	0.333	59.2	0.021	5.00	0.0	0.600	o	225	Pipe/Conduit	
1.001	21.837	0.377	58.0	0.031	0.00	0.0	0.600	o	225	Pipe/Conduit	
1.002	20.146	0.081	250.0	0.036	0.00	0.0	0.600	o	225	Pipe/Conduit	
1.003	18.115	0.072	250.0	0.032	0.00	0.0	0.600	o	225	Pipe/Conduit	
1.004	21.145	0.430	49.1	0.019	0.00	0.0	0.600	o	225	Pipe/Conduit	
2.000	32.882	0.556	59.1	0.029	5.00	0.0	0.600	o	225	Pipe/Conduit	
2.001	37.053	0.627	59.1	0.026	0.00	0.0	0.600	o	225	Pipe/Conduit	
2.002	10.937	0.428	25.5	0.020	0.00	0.0	0.600	o	225	Pipe/Conduit	
1.005	8.374	0.033	250.0	0.028	0.00	0.0	0.600	o	300	Pipe/Conduit	
1.006	8.919	0.567	15.7	0.029	0.00	0.0	0.600	o	300	Pipe/Conduit	
3.000	15.946	0.518	30.8	0.024	5.00	0.0	0.600	o	150	Pipe/Conduit	
3.001	15.192	0.343	44.3	0.024	0.00	0.0	0.600	o	150	Pipe/Conduit	
1.007	28.463	0.114	250.0	0.034	0.00	0.0	0.600	o	300	Pipe/Conduit	
1.008	36.245	0.145	250.0	0.057	0.00	0.0	0.600	o	300	Pipe/Conduit	
4.000	4.063	0.068	59.7	0.031	5.00	0.0	0.600	o	100	Pipe/Conduit	
1.009	8.198	0.033	250.0	0.057	0.00	0.0	0.600	o	300	Pipe/Conduit	

Network Results Table

PN	Rain (mm/hr)	T.C. (mins)	US/IL (m)	Σ I.Area (ha)	Σ Base Flow (l/s)	Foul (l/s)	Add Flow (l/s)	Vel (m/s)	Cap (l/s)	Flow (l/s)
1.000	50.00	5.19	85.676	0.021	0.0	0.0	0.0	1.70	67.7	2.8
1.001	50.00	5.40	85.343	0.052	0.0	0.0	0.0	1.72	68.4	7.1
1.002	50.00	5.81	84.966	0.088	0.0	0.0	0.0	0.82	32.7	11.9
1.003	50.00	6.18	84.886	0.119	0.0	0.0	0.0	0.82	32.7	16.2
1.004	50.00	6.37	84.813	0.139	0.0	0.0	0.0	1.87	74.4	18.8
2.000	50.00	5.32	85.994	0.029	0.0	0.0	0.0	1.70	67.7	4.0
2.001	50.00	5.68	85.438	0.055	0.0	0.0	0.0	1.70	67.7	7.5
2.002	50.00	5.75	84.811	0.076	0.0	0.0	0.0	2.60	103.4	10.3
1.005	50.00	6.51	84.308	0.243	0.0	0.0	0.0	0.99	70.0	32.9
1.006	50.00	6.55	84.274	0.272	0.0	0.0	0.0	3.98	281.5	36.9
3.000	50.00	5.15	84.719	0.024	0.0	0.0	0.0	1.82	32.2	3.3
3.001	50.00	5.31	84.201	0.048	0.0	0.0	0.0	1.52	26.8	6.5
1.007	50.00	7.03	83.708	0.354	0.0	0.0	0.0	0.99	70.0	47.9
1.008	50.00	7.64	83.594	0.411	0.0	0.0	0.0	0.99	70.0	55.6
4.000	50.00	5.07	83.717	0.031	0.0	0.0	0.0	1.00	7.8	4.2
1.009	50.00	7.77	83.449	0.499	0.0	0.0	0.0	0.99	70.0	67.6

©1982-2020 Innovyze

Network Design Table for Storm

PN	Length (m)	Fall (m)	Slope (1:X)	I.Area (ha)	T.E. (mins)	Base Flow (l/s)	k (mm)	HYD SECT	DIA (mm)	Section Type	Auto Design
1.010	7.678	0.031	250.0	0.000	0.00	0.0	0.600	o	300	Pipe/Conduit	
1.011	13.823	0.055	250.0	0.000	0.00	0.0	0.600	o	300	Pipe/Conduit	
5.000	8.832	0.149	59.1	0.006	5.00	0.0	0.600	o	100	Pipe/Conduit	
5.001	2.226	0.071	31.3	0.005	0.00	0.0	0.600	o	100	Pipe/Conduit	
5.002	2.645	0.011	234.4	0.000	0.00	0.0	0.600	o	100	Pipe/Conduit	
6.000	2.285	0.039	59.1	0.022	5.00	0.0	0.600	o	100	Pipe/Conduit	
6.001	3.224	0.055	59.1	0.000	0.00	0.0	0.600	o	100	Pipe/Conduit	
7.000	2.179	0.218	10.0	0.016	5.00	0.0	0.600	o	100	Pipe/Conduit	
7.001	6.229	0.649	9.6	0.000	0.00	0.0	0.600	o	100	Pipe/Conduit	
6.002	4.697	0.079	59.1	0.000	0.00	0.0	0.600	o	100	Pipe/Conduit	

Network Results Table

PN	Rain (mm/hr)	T.C. (mins)	US/IL (m)	Σ I.Area (ha)	Σ Base Flow (l/s)	Foul (l/s)	Add Flow (l/s)	Vel (m/s)	Cap (l/s)	Flow (l/s)
1.010	50.00	7.90	83.416	0.499	0.0	0.0	0.0	0.99	70.0	67.6
1.011	50.00	8.14	83.385	0.499	0.0	0.0	0.0	0.99	70.0	67.6
5.000	50.00	5.15	85.679	0.006	0.0	0.0	0.0	1.00	7.9	0.8
5.001	50.00	5.17	85.529	0.011	0.0	0.0	0.0	1.38	10.9	1.4
5.002	50.00	5.26	85.458	0.011	0.0	0.0	0.0	0.50	3.9	1.4
6.000	50.00	5.04	83.596	0.022	0.0	0.0	0.0	1.00	7.9	3.0
6.001	50.00	5.09	83.557	0.022	0.0	0.0	0.0	1.00	7.9	3.0
7.000	50.00	5.01	84.369	0.016	0.0	0.0	0.0	2.46	19.3	2.2
7.001	50.00	5.06	84.151	0.016	0.0	0.0	0.0	2.51	19.7	2.2
6.002	50.00	5.17	83.503	0.038	0.0	0.0	0.0	1.00	7.9	5.2

©1982-2020 Innovyze

Manhole Schedules for Storm

MH Name	MH CL (m)	MH Depth (m)	MH Connection	MH Diam.,L*W (mm)	Pipe Out PN	Pipe Out Invert Level (m)	Pipe Out Diameter (mm)	Pipes In PN	Pipes In Invert Level (m)	Pipes In Diameter (mm)	Backdrop (mm)
1	86.676	1.000	Open Manhole	1050	1.000	85.676	225				
2	86.815	1.472	Open Manhole	1050	1.001	85.343	225	1.000	85.343	225	
3	86.696	1.730	Open Manhole	1050	1.002	84.966	225	1.001	84.966	225	
4	86.393	1.507	Open Manhole	1050	1.003	84.886	225	1.002	84.886	225	
5	86.063	1.250	Open Manhole	1050	1.004	84.813	225	1.003	84.813	225	
6	86.994	1.000	Open Manhole	1050	2.000	85.994	225				
7	86.593	1.155	Open Manhole	1050	2.001	85.438	225	2.000	85.438	225	
8	86.281	1.470	Open Manhole	1050	2.002	84.811	225	2.001	84.811	225	
9	85.508	1.200	Open Manhole	1200	1.005	84.308	300	1.004	84.383	225	
								2.002	84.383	225	
10	85.804	1.529	Open Manhole	1050	1.006	84.274	300	1.005	84.274	300	
11	85.719	1.000	Open Manhole	1050	3.000	84.719	150				
12	85.201	1.000	Open Manhole	1050	3.001	84.201	150	3.000	84.201	150	
13	84.908	1.200	Open Manhole	1050	1.007	83.708	300	1.006	83.708	300	
								3.001	83.858	150	
14	85.196	1.602	Open Manhole	1050	1.008	83.594	300	1.007	83.594	300	
15	85.635	1.918	Open Manhole	1050	4.000	83.717	100				
16	85.656	2.207	Open Manhole	1050	1.009	83.449	300	1.008	83.449	300	
								4.000	83.649	100	
16A	85.862	2.446	Open Manhole	1200	1.010	83.416	300	1.009	83.416	300	
17	85.972	2.586	Open Manhole	1200	1.011	83.385	300	1.010	83.385	300	
	85.839	2.509	Open Manhole	0		OUTFALL		1.011	83.330	300	
18	86.679	1.000	Open Manhole	450	5.000	85.679	100				
19	86.669	1.140	Open Manhole	450	5.001	85.529	100	5.000	85.529	100	
20	86.812	1.354	Open Manhole	450	5.002	85.458	100	5.001	85.458	100	
	86.966	1.519	Open Manhole	0		OUTFALL		5.002	85.447	100	
21	84.596	1.000	Open Manhole	600	6.000	83.596	100				
22	84.735	1.178	Open Manhole	450	6.001	83.557	100	6.000	83.557	100	
23	85.369	1.000	Open Manhole	600	7.000	84.369	100				
24	85.445	1.294	Open Manhole	450	7.001	84.151	100	7.000	84.151	100	
25	84.912	1.410	Open Manhole	450	6.002	83.503	100	6.001	83.503	100	
								7.001	83.503	100	
	84.622	1.198	Open Manhole	0		OUTFALL		6.002	83.423	100	

©1982-2020 Innovyze

Manhole Schedules for Storm

MH Name	Manhole Easting (m)	Manhole Northing (m)	Intersection Easting (m)	Intersection Northing (m)	Manhole Access	Layout (North)
1	388130.304	401067.351	388130.304	401067.351	Required	
2	388111.216	401072.250	388111.216	401072.250	Required	
3	388089.892	401076.956	388089.892	401076.956	Required	
4	388070.389	401071.906	388070.389	401071.906	Required	
5	388052.786	401067.631	388052.786	401067.631	Required	
6	388123.264	401056.211	388123.264	401056.211	Required	
7	388091.386	401064.276	388091.386	401064.276	Required	
8	388055.476	401055.146	388055.476	401055.146	Required	
9	388048.185	401046.993	388048.185	401046.993	Required	
10	388056.326	401045.028	388056.326	401045.028	Required	
11	388050.327	401027.731	388050.327	401027.731	Required	
12	388065.621	401032.246	388065.621	401032.246	Required	
13	388064.918	401047.421	388064.918	401047.421	Required	
14	388092.490	401054.488	388092.490	401054.488	Required	
15	388129.259	401044.350	388129.259	401044.350	Required	

©1982-2020 Innovyze

Manhole Schedules for Storm

MH Name	Manhole Easting (m)	Manhole Northing (m)	Intersection Easting (m)	Intersection Northing (m)	Manhole Access	Layout (North)
16	388126.339	401041.526	388126.339	401041.526	Required	
16A	388134.317	401039.638	388134.317	401039.638	Required	
17	388134.304	401031.960	388134.304	401031.960	Required	
	388120.481	401031.945			No Entry	
18	388137.549	401046.843	388137.549	401046.843	Required	
19	388137.506	401055.674	388137.506	401055.674	Required	
20	388137.201	401057.879	388137.201	401057.879	Required	
	388137.078	401060.521			No Entry	
21	388032.112	401067.831	388032.112	401067.831	Required	
22	388032.759	401065.639	388032.759	401065.639	Required	
23	388039.740	401057.368	388039.740	401057.368	Required	
24	388039.164	401059.470	388039.164	401059.470	Required	
25	388033.765	401062.576	388033.765	401062.576	Required	
	388029.339	401061.004			No Entry	

©1982-2020 Innovyze

PIPELINE SCHEDULES for Storm

Upstream Manhole

PN	Hyd Sect	Diam (mm)	MH Name	C.Level (m)	I.Level (m)	D.Depth (m)	MH Connection	MH DIAM., L*W (mm)
1.000	o	225	1	86.676	85.676	0.775	Open Manhole	1050
1.001	o	225	2	86.815	85.343	1.247	Open Manhole	1050
1.002	o	225	3	86.696	84.966	1.505	Open Manhole	1050
1.003	o	225	4	86.393	84.886	1.282	Open Manhole	1050
1.004	o	225	5	86.063	84.813	1.025	Open Manhole	1050
2.000	o	225	6	86.994	85.994	0.775	Open Manhole	1050
2.001	o	225	7	86.593	85.438	0.930	Open Manhole	1050
2.002	o	225	8	86.281	84.811	1.245	Open Manhole	1050
1.005	o	300	9	85.508	84.308	0.900	Open Manhole	1200
1.006	o	300	10	85.804	84.274	1.229	Open Manhole	1050
3.000	o	150	11	85.719	84.719	0.850	Open Manhole	1050
3.001	o	150	12	85.201	84.201	0.850	Open Manhole	1050
1.007	o	300	13	84.908	83.708	0.900	Open Manhole	1050
1.008	o	300	14	85.196	83.594	1.302	Open Manhole	1050
4.000	o	100	15	85.635	83.717	1.818	Open Manhole	1050

Downstream Manhole

PN	Length (m)	Slope (1:X)	MH Name	C.Level (m)	I.Level (m)	D.Depth (m)	MH Connection	MH DIAM., L*W (mm)
1.000	19.707	59.2	2	86.815	85.343	1.247	Open Manhole	1050
1.001	21.837	58.0	3	86.696	84.966	1.505	Open Manhole	1050
1.002	20.146	250.0	4	86.393	84.886	1.282	Open Manhole	1050
1.003	18.115	250.0	5	86.063	84.813	1.025	Open Manhole	1050
1.004	21.145	49.1	9	85.508	84.383	0.900	Open Manhole	1200
2.000	32.882	59.1	7	86.593	85.438	0.930	Open Manhole	1050
2.001	37.053	59.1	8	86.281	84.811	1.245	Open Manhole	1050
2.002	10.937	25.5	9	85.508	84.383	0.900	Open Manhole	1200
1.005	8.374	250.0	10	85.804	84.274	1.229	Open Manhole	1050
1.006	8.919	15.7	13	84.908	83.708	0.900	Open Manhole	1050
3.000	15.946	30.8	12	85.201	84.201	0.850	Open Manhole	1050
3.001	15.192	44.3	13	84.908	83.858	0.900	Open Manhole	1050
1.007	28.463	250.0	14	85.196	83.594	1.302	Open Manhole	1050
1.008	36.245	250.0	16	85.656	83.449	1.907	Open Manhole	1050
4.000	4.063	59.7	16	85.656	83.649	1.907	Open Manhole	1050

©1982-2020 Innovyze

PIPELINE SCHEDULES for Storm

Upstream Manhole

PN	Hyd Sect	Diam (mm)	MH Name	C.Level (m)	I.Level (m)	D.Depth (m)	MH Connection	MH DIAM., L*W (mm)
1.009	o	300	16	85.656	83.449	1.907	Open Manhole	1050
1.010	o	300	16A	85.862	83.416	2.146	Open Manhole	1200
1.011	o	300	17	85.972	83.385	2.286	Open Manhole	1200
5.000	o	100	18	86.679	85.679	0.900	Open Manhole	450
5.001	o	100	19	86.669	85.529	1.040	Open Manhole	450
5.002	o	100	20	86.812	85.458	1.254	Open Manhole	450
6.000	o	100	21	84.596	83.596	0.900	Open Manhole	600
6.001	o	100	22	84.735	83.557	1.078	Open Manhole	450
7.000	o	100	23	85.369	84.369	0.900	Open Manhole	600
7.001	o	100	24	85.445	84.151	1.194	Open Manhole	450
6.002	o	100	25	84.912	83.503	1.310	Open Manhole	450

Downstream Manhole

PN	Length (m)	Slope (1:X)	MH Name	C.Level (m)	I.Level (m)	D.Depth (m)	MH Connection	MH DIAM., L*W (mm)
1.009	8.198	250.0	16A	85.862	83.416	2.146	Open Manhole	1200
1.010	7.678	250.0	17	85.972	83.385	2.286	Open Manhole	1200
1.011	13.823	250.0		85.839	83.330	2.209	Open Manhole	0
5.000	8.832	59.1	19	86.669	85.529	1.040	Open Manhole	450
5.001	2.226	31.3	20	86.812	85.458	1.254	Open Manhole	450
5.002	2.645	234.4		86.966	85.447	1.419	Open Manhole	0
6.000	2.285	59.1	22	84.735	83.557	1.078	Open Manhole	450
6.001	3.224	59.1	25	84.912	83.503	1.310	Open Manhole	450
7.000	2.179	10.0	24	85.445	84.151	1.194	Open Manhole	450
7.001	6.229	9.6	25	84.912	83.503	1.310	Open Manhole	450
6.002	4.697	59.1		84.622	83.423	1.098	Open Manhole	0

©1982-2020 Innovyze

Area Summary for Storm

Pipe Number	PIMP Type	PIMP Name	PIMP (%)	Gross Area (ha)	Imp. Area (ha)	Pipe Total (ha)
1.000	User	-	100	0.021	0.021	0.021
1.001	User	-	100	0.031	0.031	0.031
1.002	User	-	100	0.036	0.036	0.036
1.003	User	-	100	0.032	0.032	0.032
1.004	User	-	100	0.019	0.019	0.019
2.000	User	-	100	0.029	0.029	0.029
2.001	User	-	100	0.026	0.026	0.026
2.002	User	-	100	0.020	0.020	0.020
1.005	User	-	100	0.028	0.028	0.028
1.006	User	-	100	0.029	0.029	0.029
3.000	User	-	100	0.024	0.024	0.024
3.001	User	-	100	0.024	0.024	0.024
1.007	User	-	100	0.034	0.034	0.034
1.008	User	-	100	0.057	0.057	0.057
4.000	User	-	100	0.031	0.031	0.031
1.009	User	-	100	0.057	0.057	0.057
1.010	-	-	100	0.000	0.000	0.000
1.011	-	-	100	0.000	0.000	0.000
5.000	User	-	100	0.006	0.006	0.006
5.001	User	-	100	0.005	0.005	0.005
5.002	-	-	100	0.000	0.000	0.000
6.000	User	-	100	0.022	0.022	0.022
6.001	-	-	100	0.000	0.000	0.000
7.000	User	-	100	0.016	0.016	0.016
7.001	-	-	100	0.000	0.000	0.000
6.002	-	-	100	0.000	0.000	0.000
				Total	Total	Total
				0.548	0.548	0.548

©1982-2020 Innovyze

Network Classifications for Storm

PN	USMH Name	Pipe Dia (mm)	Min Cover Depth (m)	Max Cover Depth (m)	Pipe Type	MH Dia (mm)	MH Width (mm)	MH Ring Depth (m)	MH Type
1.000	1	225	0.775	1.247	Unclassified	1050	0	0.775	Unclassified
1.001	2	225	1.247	1.540	Unclassified	1050	0	1.247	Unclassified
1.002	3	225	1.282	1.505	Unclassified	1050	0	1.505	Unclassified
1.003	4	225	1.025	1.282	Unclassified	1050	0	1.282	Unclassified
1.004	5	225	0.868	1.214	Unclassified	1050	0	1.025	Unclassified
2.000	6	225	0.775	0.930	Unclassified	1050	0	0.775	Unclassified
2.001	7	225	0.930	1.245	Unclassified	1050	0	0.930	Unclassified
2.002	8	225	0.743	1.245	Unclassified	1050	0	1.245	Unclassified
1.005	9	300	0.900	1.229	Unclassified	1200	0	0.900	Unclassified
1.006	10	300	0.790	1.229	Unclassified	1050	0	1.229	Unclassified
3.000	11	150	0.712	1.034	Unclassified	1050	0	0.850	Unclassified
3.001	12	150	0.850	0.900	Unclassified	1050	0	0.850	Unclassified
1.007	13	300	0.900	1.302	Unclassified	1050	0	0.900	Unclassified
1.008	14	300	1.302	1.907	Unclassified	1050	0	1.302	Unclassified
4.000	15	100	1.818	1.907	Unclassified	1050	0	1.818	Unclassified
1.009	16	300	1.907	2.146	Unclassified	1050	0	1.907	Unclassified
1.010	16A	300	2.146	2.286	Unclassified	1200	0	2.146	Unclassified
1.011	17	300	2.152	2.286	Unclassified	1200	0	2.286	Unclassified
5.000	18	100	0.877	1.040	Unclassified	450	0	0.900	Unclassified
5.001	19	100	1.040	1.254	Unclassified	450	0	1.040	Unclassified
5.002	20	100	1.254	1.419	Unclassified	450	0	1.254	Unclassified
6.000	21	100	0.900	1.078	Unclassified	600	0	0.900	Unclassified
6.001	22	100	1.078	1.310	Unclassified	450	0	1.078	Unclassified
7.000	23	100	0.900	1.194	Unclassified	600	0	0.900	Unclassified
7.001	24	100	1.194	1.310	Unclassified	450	0	1.194	Unclassified
6.002	25	100	1.098	1.310	Unclassified	450	0	1.310	Unclassified

Free Flowing Outfall Details for Storm

Outfall Pipe Number	Outfall Name	C. Level (m)	I. Level (m)	Min I. Level (m)	D,L (mm)	W (mm)
1.011		85.839	83.330	0.000	0	0

Free Flowing Outfall Details for Storm

Outfall Pipe Number	Outfall Name	C. Level (m)	I. Level (m)	Min I. Level (m)	D,L (mm)	W (mm)
5.002		86.966	85.447	0.000	0	0

©1982-2020 Innovyze

Free Flowing Outfall Details for Storm

Outfall Pipe Number	Outfall Name	C. Level (m)	I. Level (m)	Min I. Level (m)	D,L (mm)	W (mm)
6.002		84.622	83.423	0.000	0	0

Simulation Criteria for Storm

Volumetric Runoff Coeff	0.750	Additional Flow - % of Total Flow	0.000
Areal Reduction Factor	1.000	MADD Factor * 10m³/ha Storage	2.000
Hot Start (mins)	0	Inlet Coeffiecient	0.800
Hot Start Level (mm)	0	Flow per Person per Day (l/per/day)	0.000
Manhole Headloss Coeff (Global)	0.500	Run Time (mins)	60
Foul Sewage per hectare (l/s)	0.000	Output Interval (mins)	1

Number of Input Hydrographs	0	Number of Storage Structures	4
Number of Online Controls	4	Number of Time/Area Diagrams	0
Number of Offline Controls	0	Number of Real Time Controls	0

Synthetic Rainfall Details

Rainfall Model	FSR	Profile Type	Summer
Return Period (years)	100	Cv (Summer)	0.750
Region	England and Wales	Cv (Winter)	0.840
M5-60 (mm)	18.200	Storm Duration (mins)	30
Ratio R	0.345		

©1982-2020 Innovyze

Online Controls for Storm

Orifice Manhole: 10, DS/PN: 1.006, Volume (m³): 1.8

Diameter (m) 0.079 Discharge Coefficient 0.600 Invert Level (m) 84.274

Hydro-Brake® Optimum Manhole: 16, DS/PN: 1.009, Volume (m³): 4.4

Unit Reference	MD-SHE-0191-2160-2000-2160
Design Head (m)	2.000
Design Flow (l/s)	21.6
Flush-Flo™	Calculated
Objective	Minimise upstream storage
Application	Surface
Sump Available	Yes
Diameter (mm)	191
Invert Level (m)	83.449
Minimum Outlet Pipe Diameter (mm)	225
Suggested Manhole Diameter (mm)	1800

Control Points	Head (m)	Flow (l/s)
Design Point (Calculated)	2.000	21.6
Flush-Flo™	0.586	21.6
Kick-Flo®	1.244	17.2
Mean Flow over Head Range	-	18.8

The hydrological calculations have been based on the Head/Discharge relationship for the Hydro-Brake® Optimum as specified. Should another type of control device other than a Hydro-Brake Optimum® be utilised then these storage routing calculations will be invalidated

Depth (m)	Flow (l/s)	Depth (m)	Flow (l/s)	Depth (m)	Flow (l/s)	Depth (m)	Flow (l/s)
0.100	6.6	1.200	18.1	3.000	26.2	7.000	39.4
0.200	17.6	1.400	18.2	3.500	28.2	7.500	40.8
0.300	20.0	1.600	19.4	4.000	30.1	8.000	42.1
0.400	21.1	1.800	20.5	4.500	31.9	8.500	43.3
0.500	21.5	2.000	21.6	5.000	33.5	9.000	44.5
0.600	21.6	2.200	22.6	5.500	35.1	9.500	45.7
0.800	21.2	2.400	23.6	6.000	36.6		
1.000	20.3	2.600	24.5	6.500	38.0		

Pump Manhole: 20, DS/PN: 5.002, Volume (m³): 0.2

Invert Level (m) 85.458

Pump Manhole: 25, DS/PN: 6.002, Volume (m³): 0.3

Invert Level (m) 83.503

©1982-2020 Innovyze

Storage Structures for Storm

Porous Car Park Manhole: 9, DS/PN: 1.005

Infiltration Coefficient Base (m/hr)	0.00000	Width (m)	10.0
Membrane Percolation (mm/hr)	1000	Length (m)	46.0
Max Percolation (l/s)	127.8	Slope (1:X)	200.0
Safety Factor	1.5	Depression Storage (mm)	5
Porosity	0.30	Evaporation (mm/day)	3
Invert Level (m)	84.778	Membrane Depth (mm)	150

Cellular Storage Manhole: 13, DS/PN: 1.007

Invert Level (m)	82.708	Safety Factor	1.5
Infiltration Coefficient Base (m/hr)	0.00000	Porosity	0.95
Infiltration Coefficient Side (m/hr)	0.00000		

Depth (m)	Area (m²)	Inf. Area (m²)	Depth (m)	Area (m²)	Inf. Area (m²)
0.000	95.0	95.0	1.201	0.0	141.8
1.200	95.0	141.8			

Cellular Storage Manhole: 20, DS/PN: 5.002

Invert Level (m)	85.500	Safety Factor	1.5
Infiltration Coefficient Base (m/hr)	0.00000	Porosity	0.35
Infiltration Coefficient Side (m/hr)	0.00000		

Depth (m)	Area (m²)	Inf. Area (m²)	Depth (m)	Area (m²)	Inf. Area (m²)
0.000	75.0	75.0	0.401	0.0	91.0
0.400	75.0	91.0			

Cellular Storage Manhole: 25, DS/PN: 6.002

Invert Level (m)	83.598	Safety Factor	1.5
Infiltration Coefficient Base (m/hr)	0.00360	Porosity	0.35
Infiltration Coefficient Side (m/hr)	0.00360		

Depth (m)	Area (m²)	Inf. Area (m²)	Depth (m)	Area (m²)	Inf. Area (m²)
0.000	140.0	140.0	0.601	0.0	168.8
0.600	140.0	168.8			

©1982-2020 Innovyze

Summary of Critical Results by Maximum Level (Rank 1) for Storm

Simulation Criteria

Areal Reduction Factor 1.000 Additional Flow - % of Total Flow 0.000
Hot Start (mins) 0 MADD Factor * 10m³/ha Storage 2.000
Hot Start Level (mm) 0 Inlet Coeffiecient 0.800
Manhole Headloss Coeff (Global) 0.500 Flow per Person per Day (l/per/day) 0.000
Foul Sewage per hectare (l/s) 0.000

Number of Input Hydrographs 0 Number of Storage Structures 4
Number of Online Controls 4 Number of Time/Area Diagrams 0
Number of Offline Controls 0 Number of Real Time Controls 0

Synthetic Rainfall Details

Rainfall Model FSR Ratio R 0.348
Region England and Wales Cv (Summer) 0.750
M5-60 (mm) 18.100 Cv (Winter) 0.840

Margin for Flood Risk Warning (mm) 450.0
Analysis Timestep 2.5 Second Increment (Extended)
DTS Status OFF
DVD Status ON
Inertia Status ON

Profile(s) Summer and Winter
Duration(s) (mins) 15, 30, 60, 120, 180, 240, 360, 480, 600, 720, 960, 1440
Return Period(s) (years) 30
Climate Change (%) 0

WARNING: Half Drain Time has not been calculated as the structure is too full.

PN	US/MH Name	Storm	Return Period	Climate Change	First (X) Surcharge	First (Y) Flood	First (Z) Overflow	Overflow Act.	Water Level (m)
1.000	1	15 Winter	30	+0%					85.724
1.001	2	15 Winter	30	+0%					85.420
1.002	3	15 Winter	30	+0%	30/15 Summer				85.225
1.003	4	15 Winter	30	+0%	30/15 Summer				85.169
1.004	5	60 Winter	30	+0%	30/15 Summer				85.093
2.000	6	15 Winter	30	+0%					86.049
2.001	7	15 Winter	30	+0%					85.516
2.002	8	60 Winter	30	+0%	30/15 Winter				85.083
1.005	9	60 Winter	30	+0%	30/15 Summer				85.079
1.006	10	60 Winter	30	+0%	30/15 Summer				85.081
3.000	11	15 Winter	30	+0%					84.768
3.001	12	15 Winter	30	+0%					84.284
1.007	13	360 Winter	30	+0%					83.791
1.008	14	15 Winter	30	+0%	30/15 Summer				84.000
4.000	15	15 Winter	30	+0%	30/15 Summer				84.096
1.009	16	15 Winter	30	+0%	30/15 Summer				84.001

©1982-2020 Innovyze

Summary of Critical Results by Maximum Level (Rank 1) for Storm

PN	US/MH Name	Surcharged Depth (m)	Flooded Volume (m³)	Flow / Cap.	Overflow (l/s)	Half Drain Time (mins)	Pipe Flow (l/s)	Status	Level Exceeded
1.000	1	-0.177	0.000	0.10			6.1	OK	
1.001	2	-0.148	0.000	0.25			15.9	OK	
1.002	3	0.033	0.000	0.81			24.0	SURCHARGED	
1.003	4	0.058	0.000	1.06			31.2	SURCHARGED	
1.004	5	0.055	0.000	0.29			19.7	SURCHARGED	
2.000	6	-0.170	0.000	0.13			8.5	OK	
2.001	7	-0.147	0.000	0.26			16.4	OK	
2.002	8	0.047	0.000	0.13			11.4	SURCHARGED	
1.005	9	0.471	0.000	0.22		35	11.6	FLOOD RISK	
1.006	10	0.506	0.000	0.06			11.3	SURCHARGED	
3.000	11	-0.101	0.000	0.24			7.0	OK	
3.001	12	-0.067	0.000	0.58			14.4	OK	
1.007	13	-0.217	0.000	0.17			10.8	OK	
1.008	14	0.106	0.000	0.11			7.0	SURCHARGED	
4.000	15	0.279	0.000	1.23			8.2	SURCHARGED	
1.009	16	0.252	0.000	0.40			21.2	SURCHARGED	

©1982-2020 Innovyze

STORM SEWER DESIGN by the Modified Rational Method

Design Criteria for Storm

Pipe Sizes Pvt_SW Manhole Sizes Pvt_MH

FSR Rainfall Model - England and Wales

Return Period (years)	100	PIMP (%)	100
M5-60 (mm)	18.200	Add Flow / Climate Change (%)	0
Ratio R	0.345	Minimum Backdrop Height (m)	0.200
Maximum Rainfall (mm/hr)	50	Maximum Backdrop Height (m)	1.500
Maximum Time of Concentration (mins)	30	Min Design Depth for Optimisation (m)	0.900
Foul Sewage (l/s/ha)	0.000	Min Vel for Auto Design only (m/s)	1.00
Volumetric Runoff Coeff.	0.750	Min Slope for Optimisation (1:X)	500

Designed with Level Soffits

Time Area Diagram for Storm at outfall (pipe 1.011)

Time (mins)	Area (ha)	Time (mins)	Area (ha)	Time (mins)	Area (ha)
0-4	0.267	4-8	0.231	8-12	0.001

Total Area Contributing (ha) = 0.499

Total Pipe Volume (m³) = 15.707

Time Area Diagram at outfall (pipe 5.002)

Time (mins)	Area (ha)	Time (mins)	Area (ha)
0-4	0.009	4-8	0.002

Total Area Contributing (ha) = 0.011

Total Pipe Volume (m³) = 0.108

Time Area Diagram at outfall (pipe 6.002)

Time (mins)	Area (ha)	Time (mins)	Area (ha)
0-4	0.029	4-8	0.009

Total Area Contributing (ha) = 0.038

Total Pipe Volume (m³) = 0.146

Network Design Table for Storm

©1982-2020 Innovyze

Network Design Table for Storm

PN	Length (m)	Fall (m)	Slope (1:X)	I.Area (ha)	T.E. (mins)	Base Flow (l/s)	k (mm)	HYD SECT	DIA (mm)	Section Type	Auto Design

Network Results Table

PN	Rain (mm/hr)	T.C. (mins)	US/IL (m)	Σ I.Area (ha)	Σ Base Flow (l/s)	Foul (l/s)	Add Flow (l/s)	Vel (m/s)	Cap (l/s)	Flow (l/s)

©1982-2020 Innovyze

Network Design Table for Storm

PN	Length (m)	Fall (m)	Slope (1:X)	I.Area (ha)	T.E. (mins)	Base Flow (l/s)	k (mm)	HYD SECT	DIA (mm)	Section Type	Auto Design
1.000	19.707	0.333	59.2	0.021	5.00	0.0	0.600	o	225	Pipe/Conduit	
1.001	21.837	0.377	58.0	0.031	0.00	0.0	0.600	o	225	Pipe/Conduit	
1.002	20.146	0.081	250.0	0.036	0.00	0.0	0.600	o	225	Pipe/Conduit	
1.003	18.115	0.072	250.0	0.032	0.00	0.0	0.600	o	225	Pipe/Conduit	
1.004	21.145	0.430	49.1	0.019	0.00	0.0	0.600	o	225	Pipe/Conduit	
2.000	32.882	0.556	59.1	0.029	5.00	0.0	0.600	o	225	Pipe/Conduit	
2.001	37.053	0.627	59.1	0.026	0.00	0.0	0.600	o	225	Pipe/Conduit	
2.002	10.937	0.428	25.5	0.020	0.00	0.0	0.600	o	225	Pipe/Conduit	
1.005	8.374	0.033	250.0	0.028	0.00	0.0	0.600	o	300	Pipe/Conduit	
1.006	8.919	0.567	15.7	0.029	0.00	0.0	0.600	o	300	Pipe/Conduit	
3.000	15.946	0.518	30.8	0.024	5.00	0.0	0.600	o	150	Pipe/Conduit	
3.001	15.192	0.343	44.3	0.024	0.00	0.0	0.600	o	150	Pipe/Conduit	
1.007	28.463	0.114	250.0	0.034	0.00	0.0	0.600	o	300	Pipe/Conduit	
1.008	36.245	0.145	250.0	0.057	0.00	0.0	0.600	o	300	Pipe/Conduit	
4.000	4.063	0.068	59.7	0.031	5.00	0.0	0.600	o	100	Pipe/Conduit	
1.009	8.198	0.033	250.0	0.057	0.00	0.0	0.600	o	300	Pipe/Conduit	

Network Results Table

PN	Rain (mm/hr)	T.C. (mins)	US/IL (m)	Σ I.Area (ha)	Σ Base Flow (l/s)	Foul (l/s)	Add Flow (l/s)	Vel (m/s)	Cap (l/s)	Flow (l/s)
1.000	50.00	5.19	85.676	0.021	0.0	0.0	0.0	1.70	67.7	2.8
1.001	50.00	5.40	85.343	0.052	0.0	0.0	0.0	1.72	68.4	7.1
1.002	50.00	5.81	84.966	0.088	0.0	0.0	0.0	0.82	32.7	11.9
1.003	50.00	6.18	84.886	0.119	0.0	0.0	0.0	0.82	32.7	16.2
1.004	50.00	6.37	84.813	0.139	0.0	0.0	0.0	1.87	74.4	18.8
2.000	50.00	5.32	85.994	0.029	0.0	0.0	0.0	1.70	67.7	4.0
2.001	50.00	5.68	85.438	0.055	0.0	0.0	0.0	1.70	67.7	7.5
2.002	50.00	5.75	84.811	0.076	0.0	0.0	0.0	2.60	103.4	10.3
1.005	50.00	6.51	84.308	0.243	0.0	0.0	0.0	0.99	70.0	32.9
1.006	50.00	6.55	84.274	0.272	0.0	0.0	0.0	3.98	281.5	36.9
3.000	50.00	5.15	84.719	0.024	0.0	0.0	0.0	1.82	32.2	3.3
3.001	50.00	5.31	84.201	0.048	0.0	0.0	0.0	1.52	26.8	6.5
1.007	50.00	7.03	83.708	0.354	0.0	0.0	0.0	0.99	70.0	47.9
1.008	50.00	7.64	83.594	0.411	0.0	0.0	0.0	0.99	70.0	55.6
4.000	50.00	5.07	83.717	0.031	0.0	0.0	0.0	1.00	7.8	4.2
1.009	50.00	7.77	83.449	0.499	0.0	0.0	0.0	0.99	70.0	67.6

©1982-2020 Innovyze

Network Design Table for Storm

PN	Length (m)	Fall (m)	Slope (1:X)	I.Area (ha)	T.E. (mins)	Base Flow (l/s)	k (mm)	HYD SECT	DIA (mm)	Section Type	Auto Design
1.010	7.678	0.031	250.0	0.000	0.00	0.0	0.600	o	300	Pipe/Conduit	
1.011	13.823	0.055	250.0	0.000	0.00	0.0	0.600	o	300	Pipe/Conduit	
5.000	8.832	0.149	59.1	0.006	5.00	0.0	0.600	o	100	Pipe/Conduit	
5.001	2.226	0.071	31.3	0.005	0.00	0.0	0.600	o	100	Pipe/Conduit	
5.002	2.645	0.011	234.4	0.000	0.00	0.0	0.600	o	100	Pipe/Conduit	
6.000	2.285	0.039	59.1	0.022	5.00	0.0	0.600	o	100	Pipe/Conduit	
6.001	3.224	0.055	59.1	0.000	0.00	0.0	0.600	o	100	Pipe/Conduit	
7.000	2.179	0.218	10.0	0.016	5.00	0.0	0.600	o	100	Pipe/Conduit	
7.001	6.229	0.649	9.6	0.000	0.00	0.0	0.600	o	100	Pipe/Conduit	
6.002	4.697	0.079	59.1	0.000	0.00	0.0	0.600	o	100	Pipe/Conduit	

Network Results Table

PN	Rain (mm/hr)	T.C. (mins)	US/IL (m)	Σ I.Area (ha)	Σ Base Flow (l/s)	Foul (l/s)	Add Flow (l/s)	Vel (m/s)	Cap (l/s)	Flow (l/s)
1.010	50.00	7.90	83.416	0.499	0.0	0.0	0.0	0.99	70.0	67.6
1.011	50.00	8.14	83.385	0.499	0.0	0.0	0.0	0.99	70.0	67.6
5.000	50.00	5.15	85.679	0.006	0.0	0.0	0.0	1.00	7.9	0.8
5.001	50.00	5.17	85.529	0.011	0.0	0.0	0.0	1.38	10.9	1.4
5.002	50.00	5.26	85.458	0.011	0.0	0.0	0.0	0.50	3.9	1.4
6.000	50.00	5.04	83.596	0.022	0.0	0.0	0.0	1.00	7.9	3.0
6.001	50.00	5.09	83.557	0.022	0.0	0.0	0.0	1.00	7.9	3.0
7.000	50.00	5.01	84.369	0.016	0.0	0.0	0.0	2.46	19.3	2.2
7.001	50.00	5.06	84.151	0.016	0.0	0.0	0.0	2.51	19.7	2.2
6.002	50.00	5.17	83.503	0.038	0.0	0.0	0.0	1.00	7.9	5.2

©1982-2020 Innovyze

Manhole Schedules for Storm

MH Name	MH CL (m)	MH Depth (m)	MH Connection	MH Diam.,L*W (mm)	Pipe Out PN	Pipe Out Invert Level (m)	Pipe Out Diameter (mm)	Pipes In PN	Pipes In Invert Level (m)	Pipes In Diameter (mm)	Backdrop (mm)
1	86.676	1.000	Open Manhole	1050	1.000	85.676	225				
2	86.815	1.472	Open Manhole	1050	1.001	85.343	225	1.000	85.343	225	
3	86.696	1.730	Open Manhole	1050	1.002	84.966	225	1.001	84.966	225	
4	86.393	1.507	Open Manhole	1050	1.003	84.886	225	1.002	84.886	225	
5	86.063	1.250	Open Manhole	1050	1.004	84.813	225	1.003	84.813	225	
6	86.994	1.000	Open Manhole	1050	2.000	85.994	225				
7	86.593	1.155	Open Manhole	1050	2.001	85.438	225	2.000	85.438	225	
8	86.281	1.470	Open Manhole	1050	2.002	84.811	225	2.001	84.811	225	
9	85.508	1.200	Open Manhole	1200	1.005	84.308	300	1.004	84.383	225	
								2.002	84.383	225	
10	85.804	1.529	Open Manhole	1050	1.006	84.274	300	1.005	84.274	300	
11	85.719	1.000	Open Manhole	1050	3.000	84.719	150				
12	85.201	1.000	Open Manhole	1050	3.001	84.201	150	3.000	84.201	150	
13	84.908	1.200	Open Manhole	1050	1.007	83.708	300	1.006	83.708	300	
								3.001	83.858	150	
14	85.196	1.602	Open Manhole	1050	1.008	83.594	300	1.007	83.594	300	
15	85.635	1.918	Open Manhole	1050	4.000	83.717	100				
16	85.656	2.207	Open Manhole	1050	1.009	83.449	300	1.008	83.449	300	
								4.000	83.649	100	
16A	85.862	2.446	Open Manhole	1200	1.010	83.416	300	1.009	83.416	300	
17	85.972	2.586	Open Manhole	1200	1.011	83.385	300	1.010	83.385	300	
	85.839	2.509	Open Manhole	0		OUTFALL		1.011	83.330	300	
18	86.679	1.000	Open Manhole	450	5.000	85.679	100				
19	86.669	1.140	Open Manhole	450	5.001	85.529	100	5.000	85.529	100	
20	86.812	1.354	Open Manhole	450	5.002	85.458	100	5.001	85.458	100	
	86.966	1.519	Open Manhole	0		OUTFALL		5.002	85.447	100	
21	84.596	1.000	Open Manhole	600	6.000	83.596	100				
22	84.735	1.178	Open Manhole	450	6.001	83.557	100	6.000	83.557	100	
23	85.369	1.000	Open Manhole	600	7.000	84.369	100				
24	85.445	1.294	Open Manhole	450	7.001	84.151	100	7.000	84.151	100	
25	84.912	1.410	Open Manhole	450	6.002	83.503	100	6.001	83.503	100	
								7.001	83.503	100	
	84.622	1.198	Open Manhole	0		OUTFALL		6.002	83.423	100	

©1982-2020 Innovyze

Manhole Schedules for Storm

MH Name	Manhole Easting (m)	Manhole Northing (m)	Intersection Easting (m)	Intersection Northing (m)	Manhole Access	Layout (North)
1	388130.304	401067.351	388130.304	401067.351	Required	
2	388111.216	401072.250	388111.216	401072.250	Required	
3	388089.892	401076.956	388089.892	401076.956	Required	
4	388070.389	401071.906	388070.389	401071.906	Required	
5	388052.786	401067.631	388052.786	401067.631	Required	
6	388123.264	401056.211	388123.264	401056.211	Required	
7	388091.386	401064.276	388091.386	401064.276	Required	
8	388055.476	401055.146	388055.476	401055.146	Required	
9	388048.185	401046.993	388048.185	401046.993	Required	
10	388056.326	401045.028	388056.326	401045.028	Required	
11	388050.327	401027.731	388050.327	401027.731	Required	
12	388065.621	401032.246	388065.621	401032.246	Required	
13	388064.918	401047.421	388064.918	401047.421	Required	
14	388092.490	401054.488	388092.490	401054.488	Required	
15	388129.259	401044.350	388129.259	401044.350	Required	

©1982-2020 Innovyze

Manhole Schedules for Storm

MH Name	Manhole Easting (m)	Manhole Northing (m)	Intersection Easting (m)	Intersection Northing (m)	Manhole Access	Layout (North)
16	388126.339	401041.526	388126.339	401041.526	Required	
16A	388134.317	401039.638	388134.317	401039.638	Required	
17	388134.304	401031.960	388134.304	401031.960	Required	
	388120.481	401031.945			No Entry	
18	388137.549	401046.843	388137.549	401046.843	Required	
19	388137.506	401055.674	388137.506	401055.674	Required	
20	388137.201	401057.879	388137.201	401057.879	Required	
	388137.078	401060.521			No Entry	
21	388032.112	401067.831	388032.112	401067.831	Required	
22	388032.759	401065.639	388032.759	401065.639	Required	
23	388039.740	401057.368	388039.740	401057.368	Required	
24	388039.164	401059.470	388039.164	401059.470	Required	
25	388033.765	401062.576	388033.765	401062.576	Required	
	388029.339	401061.004			No Entry	

©1982-2020 Innovyze

PIPELINE SCHEDULES for Storm

Upstream Manhole

PN	Hyd Sect	Diam (mm)	MH Name	C.Level (m)	I.Level (m)	D.Depth (m)	MH Connection	MH DIAM., L*W (mm)
1.000	o	225	1	86.676	85.676	0.775	Open Manhole	1050
1.001	o	225	2	86.815	85.343	1.247	Open Manhole	1050
1.002	o	225	3	86.696	84.966	1.505	Open Manhole	1050
1.003	o	225	4	86.393	84.886	1.282	Open Manhole	1050
1.004	o	225	5	86.063	84.813	1.025	Open Manhole	1050
2.000	o	225	6	86.994	85.994	0.775	Open Manhole	1050
2.001	o	225	7	86.593	85.438	0.930	Open Manhole	1050
2.002	o	225	8	86.281	84.811	1.245	Open Manhole	1050
1.005	o	300	9	85.508	84.308	0.900	Open Manhole	1200
1.006	o	300	10	85.804	84.274	1.229	Open Manhole	1050
3.000	o	150	11	85.719	84.719	0.850	Open Manhole	1050
3.001	o	150	12	85.201	84.201	0.850	Open Manhole	1050
1.007	o	300	13	84.908	83.708	0.900	Open Manhole	1050
1.008	o	300	14	85.196	83.594	1.302	Open Manhole	1050
4.000	o	100	15	85.635	83.717	1.818	Open Manhole	1050

Downstream Manhole

PN	Length (m)	Slope (1:X)	MH Name	C.Level (m)	I.Level (m)	D.Depth (m)	MH Connection	MH DIAM., L*W (mm)
1.000	19.707	59.2	2	86.815	85.343	1.247	Open Manhole	1050
1.001	21.837	58.0	3	86.696	84.966	1.505	Open Manhole	1050
1.002	20.146	250.0	4	86.393	84.886	1.282	Open Manhole	1050
1.003	18.115	250.0	5	86.063	84.813	1.025	Open Manhole	1050
1.004	21.145	49.1	9	85.508	84.383	0.900	Open Manhole	1200
2.000	32.882	59.1	7	86.593	85.438	0.930	Open Manhole	1050
2.001	37.053	59.1	8	86.281	84.811	1.245	Open Manhole	1050
2.002	10.937	25.5	9	85.508	84.383	0.900	Open Manhole	1200
1.005	8.374	250.0	10	85.804	84.274	1.229	Open Manhole	1050
1.006	8.919	15.7	13	84.908	83.708	0.900	Open Manhole	1050
3.000	15.946	30.8	12	85.201	84.201	0.850	Open Manhole	1050
3.001	15.192	44.3	13	84.908	83.858	0.900	Open Manhole	1050
1.007	28.463	250.0	14	85.196	83.594	1.302	Open Manhole	1050
1.008	36.245	250.0	16	85.656	83.449	1.907	Open Manhole	1050
4.000	4.063	59.7	16	85.656	83.649	1.907	Open Manhole	1050

©1982-2020 Innovyze

PIPELINE SCHEDULES for Storm

Upstream Manhole

PN	Hyd Sect	Diam (mm)	MH Name	C.Level (m)	I.Level (m)	D.Depth (m)	MH Connection	MH DIAM., L*W (mm)
1.009	o	300	16	85.656	83.449	1.907	Open Manhole	1050
1.010	o	300	16A	85.862	83.416	2.146	Open Manhole	1200
1.011	o	300	17	85.972	83.385	2.286	Open Manhole	1200
5.000	o	100	18	86.679	85.679	0.900	Open Manhole	450
5.001	o	100	19	86.669	85.529	1.040	Open Manhole	450
5.002	o	100	20	86.812	85.458	1.254	Open Manhole	450
6.000	o	100	21	84.596	83.596	0.900	Open Manhole	600
6.001	o	100	22	84.735	83.557	1.078	Open Manhole	450
7.000	o	100	23	85.369	84.369	0.900	Open Manhole	600
7.001	o	100	24	85.445	84.151	1.194	Open Manhole	450
6.002	o	100	25	84.912	83.503	1.310	Open Manhole	450

Downstream Manhole

PN	Length (m)	Slope (1:X)	MH Name	C.Level (m)	I.Level (m)	D.Depth (m)	MH Connection	MH DIAM., L*W (mm)
1.009	8.198	250.0	16A	85.862	83.416	2.146	Open Manhole	1200
1.010	7.678	250.0	17	85.972	83.385	2.286	Open Manhole	1200
1.011	13.823	250.0		85.839	83.330	2.209	Open Manhole	0
5.000	8.832	59.1	19	86.669	85.529	1.040	Open Manhole	450
5.001	2.226	31.3	20	86.812	85.458	1.254	Open Manhole	450
5.002	2.645	234.4		86.966	85.447	1.419	Open Manhole	0
6.000	2.285	59.1	22	84.735	83.557	1.078	Open Manhole	450
6.001	3.224	59.1	25	84.912	83.503	1.310	Open Manhole	450
7.000	2.179	10.0	24	85.445	84.151	1.194	Open Manhole	450
7.001	6.229	9.6	25	84.912	83.503	1.310	Open Manhole	450
6.002	4.697	59.1		84.622	83.423	1.098	Open Manhole	0

©1982-2020 Innovyze

Area Summary for Storm

Pipe Number	PIMP Type	PIMP Name	PIMP (%)	Gross Area (ha)	Imp. Area (ha)	Pipe Total (ha)
1.000	User	-	100	0.021	0.021	0.021
1.001	User	-	100	0.031	0.031	0.031
1.002	User	-	100	0.036	0.036	0.036
1.003	User	-	100	0.032	0.032	0.032
1.004	User	-	100	0.019	0.019	0.019
2.000	User	-	100	0.029	0.029	0.029
2.001	User	-	100	0.026	0.026	0.026
2.002	User	-	100	0.020	0.020	0.020
1.005	User	-	100	0.028	0.028	0.028
1.006	User	-	100	0.029	0.029	0.029
3.000	User	-	100	0.024	0.024	0.024
3.001	User	-	100	0.024	0.024	0.024
1.007	User	-	100	0.034	0.034	0.034
1.008	User	-	100	0.057	0.057	0.057
4.000	User	-	100	0.031	0.031	0.031
1.009	User	-	100	0.057	0.057	0.057
1.010	-	-	100	0.000	0.000	0.000
1.011	-	-	100	0.000	0.000	0.000
5.000	User	-	100	0.006	0.006	0.006
5.001	User	-	100	0.005	0.005	0.005
5.002	-	-	100	0.000	0.000	0.000
6.000	User	-	100	0.022	0.022	0.022
6.001	-	-	100	0.000	0.000	0.000
7.000	User	-	100	0.016	0.016	0.016
7.001	-	-	100	0.000	0.000	0.000
6.002	-	-	100	0.000	0.000	0.000
				Total	Total	Total
				0.548	0.548	0.548

©1982-2020 Innovyze

Network Classifications for Storm

PN	USMH Name	Pipe Dia (mm)	Min Cover Depth (m)	Max Cover Depth (m)	Pipe Type	MH Dia (mm)	MH Width (mm)	MH Ring Depth (m)	MH Type
1.000	1	225	0.775	1.247	Unclassified	1050	0	0.775	Unclassified
1.001	2	225	1.247	1.540	Unclassified	1050	0	1.247	Unclassified
1.002	3	225	1.282	1.505	Unclassified	1050	0	1.505	Unclassified
1.003	4	225	1.025	1.282	Unclassified	1050	0	1.282	Unclassified
1.004	5	225	0.868	1.214	Unclassified	1050	0	1.025	Unclassified
2.000	6	225	0.775	0.930	Unclassified	1050	0	0.775	Unclassified
2.001	7	225	0.930	1.245	Unclassified	1050	0	0.930	Unclassified
2.002	8	225	0.743	1.245	Unclassified	1050	0	1.245	Unclassified
1.005	9	300	0.900	1.229	Unclassified	1200	0	0.900	Unclassified
1.006	10	300	0.790	1.229	Unclassified	1050	0	1.229	Unclassified
3.000	11	150	0.712	1.034	Unclassified	1050	0	0.850	Unclassified
3.001	12	150	0.850	0.900	Unclassified	1050	0	0.850	Unclassified
1.007	13	300	0.900	1.302	Unclassified	1050	0	0.900	Unclassified
1.008	14	300	1.302	1.907	Unclassified	1050	0	1.302	Unclassified
4.000	15	100	1.818	1.907	Unclassified	1050	0	1.818	Unclassified
1.009	16	300	1.907	2.146	Unclassified	1050	0	1.907	Unclassified
1.010	16A	300	2.146	2.286	Unclassified	1200	0	2.146	Unclassified
1.011	17	300	2.152	2.286	Unclassified	1200	0	2.286	Unclassified
5.000	18	100	0.877	1.040	Unclassified	450	0	0.900	Unclassified
5.001	19	100	1.040	1.254	Unclassified	450	0	1.040	Unclassified
5.002	20	100	1.254	1.419	Unclassified	450	0	1.254	Unclassified
6.000	21	100	0.900	1.078	Unclassified	600	0	0.900	Unclassified
6.001	22	100	1.078	1.310	Unclassified	450	0	1.078	Unclassified
7.000	23	100	0.900	1.194	Unclassified	600	0	0.900	Unclassified
7.001	24	100	1.194	1.310	Unclassified	450	0	1.194	Unclassified
6.002	25	100	1.098	1.310	Unclassified	450	0	1.310	Unclassified

Free Flowing Outfall Details for Storm

Outfall Pipe Number	Outfall Name	C. Level (m)	I. Level (m)	Min I. Level (m)	D,L (mm)	W (mm)
1.011		85.839	83.330	0.000	0	0

Free Flowing Outfall Details for Storm

Outfall Pipe Number	Outfall Name	C. Level (m)	I. Level (m)	Min I. Level (m)	D,L (mm)	W (mm)
5.002		86.966	85.447	0.000	0	0

©1982-2020 Innovyze

Free Flowing Outfall Details for Storm

Outfall Pipe Number	Outfall Name	C. Level (m)	I. Level (m)	Min I. Level (m)	D,L (mm)	W (mm)
6.002		84.622	83.423	0.000	0	0

Simulation Criteria for Storm

Volumetric Runoff Coeff	0.750	Additional Flow - % of Total Flow	0.000
Areal Reduction Factor	1.000	MADD Factor * 10m³/ha Storage	2.000
Hot Start (mins)	0	Inlet Coeffiecient	0.800
Hot Start Level (mm)	0	Flow per Person per Day (l/per/day)	0.000
Manhole Headloss Coeff (Global)	0.500	Run Time (mins)	60
Foul Sewage per hectare (l/s)	0.000	Output Interval (mins)	1

Number of Input Hydrographs	0	Number of Storage Structures	4
Number of Online Controls	4	Number of Time/Area Diagrams	0
Number of Offline Controls	0	Number of Real Time Controls	0

Synthetic Rainfall Details

Rainfall Model	FSR	Profile Type	Summer
Return Period (years)	100	Cv (Summer)	0.750
Region	England and Wales	Cv (Winter)	0.840
M5-60 (mm)	18.200	Storm Duration (mins)	30
Ratio R	0.345		

©1982-2020 Innovyze

Online Controls for Storm

Orifice Manhole: 10, DS/PN: 1.006, Volume (m³): 1.8

Diameter (m) 0.079 Discharge Coefficient 0.600 Invert Level (m) 84.274

Hydro-Brake® Optimum Manhole: 16, DS/PN: 1.009, Volume (m³): 4.4

Unit Reference	MD-SHE-0191-2160-2000-2160
Design Head (m)	2.000
Design Flow (l/s)	21.6
Flush-Flo™	Calculated
Objective	Minimise upstream storage
Application	Surface
Sump Available	Yes
Diameter (mm)	191
Invert Level (m)	83.449
Minimum Outlet Pipe Diameter (mm)	225
Suggested Manhole Diameter (mm)	1800

Control Points	Head (m)	Flow (l/s)
Design Point (Calculated)	2.000	21.6
Flush-Flo™	0.586	21.6
Kick-Flo®	1.244	17.2
Mean Flow over Head Range	-	18.8

The hydrological calculations have been based on the Head/Discharge relationship for the Hydro-Brake® Optimum as specified. Should another type of control device other than a Hydro-Brake Optimum® be utilised then these storage routing calculations will be invalidated

Depth (m)	Flow (l/s)	Depth (m)	Flow (l/s)	Depth (m)	Flow (l/s)	Depth (m)	Flow (l/s)
0.100	6.6	1.200	18.1	3.000	26.2	7.000	39.4
0.200	17.6	1.400	18.2	3.500	28.2	7.500	40.8
0.300	20.0	1.600	19.4	4.000	30.1	8.000	42.1
0.400	21.1	1.800	20.5	4.500	31.9	8.500	43.3
0.500	21.5	2.000	21.6	5.000	33.5	9.000	44.5
0.600	21.6	2.200	22.6	5.500	35.1	9.500	45.7
0.800	21.2	2.400	23.6	6.000	36.6		
1.000	20.3	2.600	24.5	6.500	38.0		

Pump Manhole: 20, DS/PN: 5.002, Volume (m³): 0.2

Invert Level (m) 85.458

Pump Manhole: 25, DS/PN: 6.002, Volume (m³): 0.3

Invert Level (m) 83.503

©1982-2020 Innovyze

Storage Structures for Storm

Porous Car Park Manhole: 9, DS/PN: 1.005

Infiltration Coefficient Base (m/hr)	0.00000	Width (m)	10.0
Membrane Percolation (mm/hr)	1000	Length (m)	46.0
Max Percolation (l/s)	127.8	Slope (1:X)	200.0
Safety Factor	1.5	Depression Storage (mm)	5
Porosity	0.30	Evaporation (mm/day)	3
Invert Level (m)	84.778	Membrane Depth (mm)	150

Cellular Storage Manhole: 13, DS/PN: 1.007

Invert Level (m)	82.708	Safety Factor	1.5
Infiltration Coefficient Base (m/hr)	0.00000	Porosity	0.95
Infiltration Coefficient Side (m/hr)	0.00000		

Depth (m)	Area (m²)	Inf. Area (m²)	Depth (m)	Area (m²)	Inf. Area (m²)
0.000	95.0	95.0	1.201	0.0	141.8
1.200	95.0	141.8			

Cellular Storage Manhole: 20, DS/PN: 5.002

Invert Level (m)	85.500	Safety Factor	1.5
Infiltration Coefficient Base (m/hr)	0.00000	Porosity	0.35
Infiltration Coefficient Side (m/hr)	0.00000		

Depth (m)	Area (m²)	Inf. Area (m²)	Depth (m)	Area (m²)	Inf. Area (m²)
0.000	75.0	75.0	0.401	0.0	91.0
0.400	75.0	91.0			

Cellular Storage Manhole: 25, DS/PN: 6.002

Invert Level (m)	83.598	Safety Factor	1.5
Infiltration Coefficient Base (m/hr)	0.00360	Porosity	0.35
Infiltration Coefficient Side (m/hr)	0.00360		

Depth (m)	Area (m²)	Inf. Area (m²)	Depth (m)	Area (m²)	Inf. Area (m²)
0.000	140.0	140.0	0.601	0.0	168.8
0.600	140.0	168.8			

©1982-2020 Innovyze

Summary of Critical Results by Maximum Level (Rank 1) for Storm

Simulation Criteria

Areal Reduction Factor 1.000 Additional Flow - % of Total Flow 0.000
Hot Start (mins) 0 MADD Factor * 10m³/ha Storage 2.000
Hot Start Level (mm) 0 Inlet Coeffiecient 0.800
Manhole Headloss Coeff (Global) 0.500 Flow per Person per Day (l/per/day) 0.000
Foul Sewage per hectare (l/s) 0.000

Number of Input Hydrographs 0 Number of Storage Structures 4
Number of Online Controls 4 Number of Time/Area Diagrams 0
Number of Offline Controls 0 Number of Real Time Controls 0

Synthetic Rainfall Details

Rainfall Model FSR Ratio R 0.348
Region England and Wales Cv (Summer) 0.750
M5-60 (mm) 18.100 Cv (Winter) 0.840

Margin for Flood Risk Warning (mm) 450.0
Analysis Timestep 2.5 Second Increment (Extended)
DTS Status OFF
DVD Status ON
Inertia Status ON

Profile(s) Summer and Winter
Duration(s) (mins) 15, 30, 60, 120, 180, 240, 360, 480, 600, 720, 960, 1440
Return Period(s) (years) 100
Climate Change (%) 40

WARNING: Half Drain Time has not been calculated as the structure is too full.

PN	US/MH Name	Storm	Return Period	Climate Change	First (X) Surcharge	First (Y) Flood	First (Z) Overflow	Overflow Act.	Water Level (m)
1.000	1	15 Winter	100	+40%					85.839
1.001	2	15 Winter	100	+40%	100/15 Summer				85.821
1.002	3	15 Winter	100	+40%	100/15 Summer				85.774
1.003	4	15 Winter	100	+40%	100/15 Summer				85.642
1.004	5	15 Winter	100	+40%	100/15 Summer				85.419
2.000	6	15 Winter	100	+40%					86.070
2.001	7	15 Winter	100	+40%					85.547
2.002	8	60 Winter	100	+40%	100/15 Summer				85.379
1.005	9	60 Winter	100	+40%	100/15 Summer				85.374
1.006	10	60 Winter	100	+40%	100/15 Summer				85.376
3.000	11	15 Winter	100	+40%					84.787
3.001	12	15 Winter	100	+40%	100/15 Summer				84.376
1.007	13	360 Winter	100	+40%	100/360 Winter				84.345
1.008	14	360 Winter	100	+40%	100/15 Summer				84.327
4.000	15	15 Summer	100	+40%	100/15 Summer				84.583
1.009	16	15 Summer	100	+40%	100/15 Summer				84.346

©1982-2020 Innovyze

Summary of Critical Results by Maximum Level (Rank 1) for Storm

PN	US/MH Name	Surcharged Depth (m)	Flooded Volume (m³)	Flow / Cap.	Overflow (l/s)	Half Drain Time (mins)	Pipe Flow (l/s)	Status	Level Exceeded
1.000	1	-0.062	0.000	0.17			10.7	OK	
1.001	2	0.253	0.000	0.37			23.2	SURCHARGED	
1.002	3	0.583	0.000	1.26			37.3	SURCHARGED	
1.003	4	0.531	0.000	1.72			50.5	SURCHARGED	
1.004	5	0.381	0.000	0.87			58.6	SURCHARGED	
2.000	6	-0.149	0.000	0.24			15.4	OK	
2.001	7	-0.116	0.000	0.46			29.6	OK	
2.002	8	0.342	0.000	0.24			20.7	SURCHARGED	
1.005	9	0.766	0.000	0.26		55	13.9	FLOOD RISK	
1.006	10	0.802	0.000	0.07			13.3	FLOOD RISK	
3.000	11	-0.081	0.000	0.43			12.7	OK	
3.001	12	0.026	0.000	1.03			25.4	SURCHARGED	
1.007	13	0.337	0.000	0.27			16.9	SURCHARGED	
1.008	14	0.433	0.000	0.28			18.1	SURCHARGED	
4.000	15	0.766	0.000	2.68			17.9	SURCHARGED	
1.009	16	0.597	0.000	0.41			21.6	SURCHARGED	

©1982-2020 Innovyze

Summary of Critical Results by Maximum Level (Rank 1) for Storm

PN	US/MH Name	Storm	Return Period	Climate Change	First (X) Surcharge	First (Y) Flood	First (Z) Overflow	Overflow Act.	Water Level (m)
1.010	16A	30 Summer	100	+40%					83.551
1.011	17	15 Summer	100	+40%					83.512
5.000	18	1440 Winter	100	+40%	100/360 Winter				85.890
5.001	19	1440 Winter	100	+40%	100/30 Winter				85.890
5.002	20	1440 Winter	100	+40%	100/15 Summer				85.890
6.000	21	1440 Winter	100	+40%	100/15 Summer				84.194
6.001	22	1440 Winter	100	+40%	100/15 Summer				84.194
7.000	23	15 Winter	100	+40%					84.428
7.001	24	15 Winter	100	+40%					84.200
6.002	25	1440 Winter	100	+40%	100/15 Summer				84.193

PN	US/MH Name	Surcharged Depth (m)	Flooded Volume (m^3)	Flow / Cap.	Overflow (l/s)	Half Drain Time (mins)	Pipe Flow (l/s)	Status	Level Exceeded
1.010	16A	-0.165	0.000	0.42			21.6	OK	
1.011	17	-0.173	0.000	0.37			21.6	OK	
5.000	18	0.112	0.000	0.02			0.2	SURCHARGED	
5.001	19	0.261	0.000	0.04			0.3	SURCHARGED	
5.002	20	0.332	0.000	0.00			0.0	SURCHARGED	
6.000	21	0.498	0.000	0.11			0.6	FLOOD RISK	
6.001	22	0.537	0.000	0.10			0.6	SURCHARGED	
7.000	23	-0.041	0.000	0.65			8.5	OK	
7.001	24	-0.051	0.000	0.48			8.4	OK	
6.002	25	0.591	0.000	0.00			0.0	SURCHARGED	

©1982-2020 Innovyze

Appendix G
Exceedance Flow Plan

dnance Survey, (c) Crown Copyright 2020. All rights reserved. Licence number 100022432

SCALE 1:250m
0m 5m 10m 15m 20m 25m
SCALE BAR FOR INFORMATION ONLY

LEGEND

- PROPOSED RED LINE BOUNDARY
- ADDITIONAL LAND TAKE WITHIN MCC OWNERSHIP
- FLOOD EXCEEDANCE DIRECTION

GENERAL NOTES:

1. THE DRAWINGS, DESIGN AND ALL INFORMATION CONTAINED THEREIN ARE THE SOLE COPYRIGHT OF CANHAM CONSULTING LTD AND ANY REPRODUCTION IS FORBIDDEN UNLESS PERMISSION IS OBTAINED IN WRITING.
2. ALL DRAWINGS SHALL BE READ IN CONJUNCTION WITH ALL RELEVANT CIVIL / STRUCTURAL ENGINEERING DRAWINGS, THE PROJECT SPECIFICATION AND DRAWINGS PRODUCED BY THE ARCHITECTS, SERVICE ENGINEERS AND LANDSCAPE ARCHITECTS.
3. FOR ALL SETTING OUT INFORMATION REFER TO THE ARCHITECT'S DRAWINGS AND DETAILS.
4. ANY DISCREPANCIES BETWEEN THE INFORMATION GIVEN BY THE ENGINEER, AND THAT PROVIDED BY OTHERS, MUST BE REFERRED TO THE ENGINEER BEFORE THE AFFECTED WORKS PROCEED.
5. DIMENSIONS MUST NOT BE SCALED FROM THE ENGINEER'S DRAWINGS.
6. ALL DIMENSIONS ARE IN METRES UNLESS NOTED OTHERWISE.
7. DIMENSIONS MARKED * ARE SUBJECT TO CONFIRMATION BY SITE MEASUREMENT BEFORE CONSTRUCTION PROCEEDS.
8. THE CONTRACTOR IS TO ENSURE THE STABILITY OF EACH ELEMENT AND THE STABILITY OF THE OVERALL CONSTRUCTION UNTIL THE WORKS ARE COMPLETE.
9. ALL DESIGNS, CONNECTIONS, WORKMANSHIP AND MATERIAL ARE TO COMPLY WITH THE CURRENT BUILDING REGULATIONS AND THE LATEST RELEVANT BRITISH STANDARD SPECIFICATION AND CODES OF PRACTICE OR OTHERWISE BE TO THE SPECIFIC WRITTEN APPROVAL OF THE ENGINEER.
10. INSPECTIONS MADE BY THE LOCAL AUTHORITY, SHALL BE ARRANGED BY THE CONTRACTOR TO SUIT THEIR PROGRAMME. ANY COST ARISING OUT OF FAILING TO CARRY OUT THE WORK TO THE SATISFACTION OF THE LOCAL AUTHORITY WILL BE THE SOLE RESPONSIBILITY OF THE CONTRACTOR.
11. THE CONTRACTOR MUST MAKE THEMSELVES AWARE OF THE EXISTING UTILITIES / SERVICES LOCATED WITHIN AND ADJACENT TO THE SITE. **NO EXCAVATIONS ARE TO BE UNDERTAKEN UNTIL THE UTILITY COMPANIES HAVE BEEN INFORMED / CO-ORDINATED WITH**: DIAL-BEFORE-YOU-DIG ADVICE IS FOLLOWED AND THE AREA IS CAT SCANNED. ALL UTILITY COMPANY GUIDELINES AND HEALTH & SAFETY PROCEDURES MUST BE STRICTLY FOLLOWED.

PRELIMINARY DRAWING:
THIS DRAWING IS FOR PRELIMINARY PURPOSES ONLY AND MUST NOT BE READ AS A CONSTRUCTION ISSUE.
IT INDICATES DESIGN INTENT ONLY AND IS SUBJECT TO AMENDMENT DURING FINAL DESIGN DEVELOPMENT.

rev	date	details	drawn	checked
P01	25.05.22	PRELIMINARY ISSUE	GPC	MH

Canham Consulting

Structural Engineers | Civil Engineers | Building Surveyors

+44 (0)1603 430650 | mail@canhamconsulting.co.uk | www.canhamconsulting.co.uk

client
SUEZ RECYCLING & RECOVERY UK Ltd

architect

project
RELIANCE STREET, MANCHESTER
HWRC DEVELOPMENT

title
PRIVATE DRAINAGE:
EXCEEDANCE FLOW PLAN

CCL ref:	drawn	design	checked	scale	size	date
216352	GPC	MH	MH	1:250	A1 (L)	25.05.2022

status:
S3 - SUITABLE FOR REVIEW & COMMENT

drawing number: 216352-CCL-XX-00-DR-C-3001
revision: P01

© This drawing is copyright and is not to be reproduced without the written permission of Canham Consulting Ltd

THIS DESIGN IS PRODUCED IN ACCORDANCE WITH THE CONSTRUCTION (DESIGN AND MANAGEMENT) REGULATIONS 2015 INCORPORATING THE APPROVED CODE OF PRACTICE. REGULATIONS 2.9 AND 17, THOSE ALTERING THE DESIGN WITHOUT THE AUTHORITY OF CANHAM CONSULTING LTD SHOULD BE AWARE THEY MAY ALSO ASSUME RESPONSIBILITY FOR THOSE DUTIES.

Appendix H
Maintenance Strategy

Canham Consulting

Structural Civil Building Engineers

Drainage Maintenance Strategy

Project Ref:	**216352**
Site:	**Reliance Street, Manchester - HWRC Development**
Client:	**SUEZ Recycling and Recovery UK Ltd**
Prepared By:	**Matthew Herring MEng CEng MICE**
Date of Report:	**25 May 2022**

Canham Consulting Ltd | Consultants to the Construction Industry
The Old School, School Lane, Thorpe St Andrew, Norwich, NR7 0EP | 70 Cowcross Street, London, EC1M 6EJ
Registered in England & Wales | Company Registration No 2710417
01603 430650 | mail@canhamconsulting.co.uk | www.canhamconsulting.co.uk

Document Issue Record

The table below provides a record of document issue and revision history:

Revisions					
Rev	**Description**	**Prepared By**	**Checked By**	**Approved By**	**Date**
P1	For Approval	MH	AM	MR	25.05.22

Contents

1 INTRODUCTION....4
2 SUDS COMPONENTS WITHIN THE DEVELOPMENT....5
3 SUMMARY OF DESIGN INTENT....6
4 INSPECTIONS....7
5 OPERATION AND MAINTENACE REQUIREMENTS FOR PERMEABLE PAVING....8
6 OPERATION AND MAINTENANCE REQUIREMENTS FOR SOAKAWAY/RAIN GARDEN....9
7 OPERATION AND MAINTENANCE REQUIREMENTS FOR GULLY....10
8 OPERATION AND MAINTENANCE REQUIREMENTS FOR CATCHPIT....11
9 OPERATION AND MAINTENANCE REQUIREMENTS FOR ATTENUATION TANK....12
10 OPERATION AND MAINTENANCE REQUIREMENTS FOR AN INTERCEPTOR....13
11 EMERGENCY ACTION IN CASE OF SPILLAGES....14

Appendices

Appendix A - SuDS Maintenance Inspection Checklist

1 INTRODUCTION

This SuDS Operation and Maintenance Strategy has been produced in line with the recommendations of the CIRIA SuDS Manual (C753) and includes a number of extracts from that document.

For further information please refer to the full document, which can be downloaded free of charge at:

http://www.ciria.org/Resources/Free_publications/SuDS_manual_C753.aspx

In addition to the recommendations in this manual, please also refer to the specific maintenance guidelines provided by the manufacturers of any proprietary products that have been used in the construction of the SuDS.

2 SUDS COMPONENTS WITHIN THE DEVELOPMENT

The development contains a number of SuDS components that will require on-going inspection and maintenance. The primary components are as follows:

- **Permeable Paving** (a surface suitable for pedestrian and/or vehicular traffic, that provides a treatment medium and allows rainwater to be temporarily stored and infiltrate into the ground)
- **Soakaway/Rain Garden** (below ground structures, designed to promote infiltration)
- **Attenuation Crates** (below ground structures, designed to attenuate flows)
- **Gully** (grated opening in the road surface to collect rain water)
- **Catch Pit** (chambers to facilitate the collection of sediment)
- **Petrol Interceptor** (device positioned ahead of the outfall intended to remove all hydrocarbons from surface water flows)

3 SUMMARY OF DESIGN INTENT

The surface water drainage system for the development will function through traditional gullies and linear drains picking up surface water flows from public and operational areas and utilising the below ground pipe network to convey these flows via gravity towards the low point on the site. Prior to the final manhole on site, the surface water flows will move through an attenuation system positioned to accept high flows during storm conditions to ensure no flooding in extreme events. Beyond the attenuation system, an interceptor will be positioned to filter out the hydrocarbons prior to connection to an existing drainage system which then discharges into Moston Brook at a controlled flow rate.

There are two areas of the site at the extreme east and western ends which will discharge into rain gardens. Here, the flows will be able to dissipate into the sub-base and infiltrate.

4 INSPECTIONS

As part of the on-going management of most SuDS components there is a need for regular inspections to ensure that blockages, silt and excess litter are not adversely affecting the component or scheme. It is important that this is carried out and time is allowed for corrective action to be taken.

Routine inspections should be carried out once a month for most components, particularly for the first year after installation. This frequency can then be reviewed (and if appropriate reduced). It is proposed that Suez or a maintenance company operating on their behalf will maintain the proposed permeable paving and all other SuDS associated with the proposed development.

Recurring attendance by the same person ensures monitoring of the drainage system, a rapid response to problems and "ownership" of the SuDS components. The inspections should be recorded on a maintenance record.

5 OPERATION AND MAINTENACE REQUIREMENTS FOR PERMEABLE PAVING

Maintenance Schedule	Required Action	Typical Frequency
Regular maintenance	Brushing and vacuuming (standard cosmetic sweep over whole surface)	Once a year, after autumn leaf fall, or reduced frequency as required, based on site-specific observations of clogging or manufacturers' recommendations. Pay particular attention to areas where water runs onto pervious surface from adjacent impermeable areas as this area is most likely to collect the most sediment
Occasional maintenance	Stabilise and mow contributing and adjacent areas	As required
	Removal of weeds or management using glyphosate applied directly into the weeds by an applicator rather than spraying	As required – once per year on less frequently used pavements
Remedial Actions	Remediate any landscaping which, through vegetation maintenance or soil slip, has been raised to within 50 mm of the level of the paving	As required
	Remedial work to any depressions, rutting and cracked or broken blocks considered detrimental to the structural performance or a hazard to users, and replace lost jointing material	As required
	Rehabilitation of surface and upper substructure by remedial sweeping	Every 10 to 15 years or as required (if infiltration performance is reduced due to significant clogging)
Monitoring	Initial inspection	Monthly for three months after installation
	Inspect for evidence of poor operation and/or weed growth – if required, take remedial action	Three-monthly, 48 h after large storms in first six months
	Inspect silt accumulation rates and establish appropriate brushing frequencies	Annually
	Monitor inspection chambers	Annually

6 OPERATION AND MAINTENANCE REQUIREMENTS FOR SOAKAWAY/RAIN GARDEN

Maintenance Schedule	Required Action	Frequency
Regular Maintenance	Inspect and identify any areas that are not operating correctly. If required, take remedial action.	Monthly for 3 months, then six monthly.
	Debris removal from catchment surface (where may cause risks to performance)	Monthly.
	Where rainfall infiltrates into blocks from above, check surface of filter for blockage by silt, algae or other matter. Remove and replace surface infiltration medium as necessary.	Monthly (and after large storms).
	Remove sediment from pre-treatment structures.	Annually, or as required.
Remedial Actions	Repair/rehabilitation of inlets, outlets, overflows and vents.	As required.
Monitoring	Inspect/ check all inlets, outlets, vents and overflows to ensure that they are in good condition and operating as designed.	Annually and after large storms.

7 OPERATION AND MAINTENANCE REQUIREMENTS FOR GULLY

Maintenance Schedule	Required Action	Typical Frequency
Regular Maintenance	Removal of litter and debris.	6 monthly.
Occasional Maintenance	Jetting of system	As required.
	Removal of sediment, oil, grease and floatables.	As required.
Remedial Actions	Clear pipework blockages.	As required.
Monitoring	Inspect for evidence of poor operation.	Six monthly.
	Inspect system and establish appropriate replacement frequencies.	Six monthly.
	Inspect sediment accumulation rates and establish appropriate replacement frequencies.	Monthly during first half year of operation, then every six months.

8 OPERATION AND MAINTENANCE REQUIREMENTS FOR CATCHPIT

Maintenance Schedule	Required Action	Frequency
Regular Maintenance	Removal of litter and debris.	6 monthly.
Occasional Maintenance	Change of filter media.	As required.
	Removal of sediment, oil, grease and floatables.	As required.
Remedial Actions	Clear perforated pipework blockages.	As required.
Monitoring	Inspect for evidence of poor operation.	Six monthly.
	Inspect filter media and establish appropriate replacement frequencies.	Six monthly.
	Inspect sediment accumulation rates and establish appropriate replacement frequencies.	Monthly during first half year of operation, then every six months.

9 OPERATION AND MAINTENANCE REQUIREMENTS FOR ATTENUATION TANK

Maintenance Schedule	Required Action	Typical Frequency
Regular maintenance	Inspect and identify any areas that are not operating correctly. If required, take remedial action	Monthly for 3 months, then annually
	Remove debris from the catchment surface (where it may cause risk to performance)	Monthly
	For systems where rainfall infiltrates into the tank from above, check surface or filter for blockage by sediment, algae or other matter, remove and replace surface infiltration medium as necessary	Annually
	Remove sediment from pre-treatment structures and/or internal forebays	Annually, or as required
Remedial actions	Repair/rehabilitate inlets, outlet, overflows and vents	As required
Monitoring	Inspect/check all inlets, outlets, vents and overflows to ensure that they are in good condition and operating as designed	Annually
	Survey inside of tank for sediment build-up and remove if necessary	Every 5 years or as required

10 OPERATION AND MAINTENANCE REQUIREMENTS FOR AN INTERCEPTOR

The maintenance requirements of the interceptor are subject to the specific interceptor chosen to be installed. It is recommended that the manufactures recommendations for maintaining the interceptor are satisfied and we would expect this to mean initial commissioning followed by 6-month servicing or sooner depending on the feedback from the device itself.

11 EMERGENCY ACTION IN CASE OF SPILLAGES

Most spillages on development sites are of compounds that do not pose a serious risk to the environment if they enter the drainage in a slow and controlled manner with time available for natural breakdown in a treatment system. Therefore, small spillages of substances that are known to be harmful to the environment should be removed where possible using soak mats as recommended by the Environment Agency, with residual spillage allowed to bioremediate in the drainage system.

In the event of a serious spillage, either by volume or of unknown or toxic compounds, then isolate the spillage with soil, turf or fabric and block outlet pipes from chamber(s) downstream of the spillage with a bung(s). (A bung for blocking pipes may be made by wrapping soil or turf in a plastic sheet or closely woven fabric.)

Contact the Environment Agency immediately on the following number.

24-hour incident hotline – 0800 80 70 60

Or if less urgent contact the regional office:

Richard Fairclough House, Knutsford Road, Latchford, Warrington, Cheshire, WA4 1HT
T: 03708 506 506

Queries regarding a design feature – In the event of a concern or failure of a SuDS design feature contact:

Canham Consulting
The Old School, School Lane, Thorpe St Andrew, Norwich, NR7 0EP
T: (01603) 430650
E: mail@canhamconsulting.co.uk
W: www.canhamconsulting.co.uk

Appendix A
SuDS Maintenance Inspection Checklist

APPENDIX B - SuDS maintenance inspection checklist

General information			
Site ID			
Site location and co-ordinates (GIS if appropriate)			
Elements forming the SuDS scheme		Approved drawing reference(s)	
Inspection frequency		Approved specification reference	
Type of development		Specific purpose of any parts of the scheme (eg biodiversity, wildlife and visual aspects)	

Inspection date

	Details	Y/N	Action required	Date completed	Details	Y/N	Action required	Date Completed
General inspection items								
Is there any evidence of erosion, channelling, ponding (where not desirable) or other poor hydraulic performance?								
Is there any evidence of accidental spillages, oils, poor water quality, odours or nuisance insects?								
Have any health and safety risks been identified to either the public or maintenance operatives?								
Is there any deterioration in the surface of permeable or porous surfaces (eg rutting, spreading of blocks or signs of ponding water)?								
Silt/sediment accumulation								
Is there any sediment accumulation at inlets (or other defined accumulation zones such as the surface of filter drains or infiltration basins and within proprietary devices)? If yes, state depth (mm) and extent. Is removal required? If yes, state waste disposal requirements and confirm that all waste management requirements have been complied with (consult environmental regulator)								
Is surface clogging visible (potentially problematic where water has to soak into the underlying construction or ground (eg underdrained swale or infiltration basin)?								
Does permeable or porous surfacing require sweeping to remove silt?								
System blockages and litter build-up								
Is there evidence of litter accumulation in the system? If yes, is this a blockage risk?								
Is there any evidence of any other clogging or blockage of outlets or drainage paths?								
Vegetation								
Is the vegetation condition satisfactory (density, weed growth, coverage etc)? (Check against approved planting regime.)								
Does any part of the system require weeding, pruning or mowing? (Check against maintenance frequency stated in approved design.)								
Is there any evidence of invasive species becoming established? If yes, state action required								
Infrastructure								
Are any check dams or weirs in good condition?								
Is there evidence of any accidental damage to the system (eg wheel ruts?)								
Is there any evidence of cross connections or other unauthorised inflows?								
Is there any evidence of tampering with the flow controls?								
Are there any other matters that could affect the performance of the system in relation to the design objectives for hydraulic, water quality, biodiversity and visual aspects? (Specify.)								
Other observations								
Information appended (eg photos)								
Suitability of current maintenance regime								
Continue as current								
Increase maintenance								
Decrease maintenance								
Next inspection								
Proposed date for next inspection								

Canham Consulting

Structural Civil Building Engineers

Canham Consulting Ltd
The Old School, School Lane, Thorpe St Andrew,
Norwich, Norfolk, NR7 0EP

Tel: 01603 430650
Email: mail@canhamconsulting.co.uk
www.canhamconsulting.co.uk

Appendix I
Brownfield Runoff Rate

Brownfield Surface Water Run Off Calculations

Project:	Project Ref:	Date:	By:	Checked:
Reliance Street	216352	15/03/2022	MH	JL

Canham Consulting
Structural Engineers Civil Engineers Building Surveyors

The flow rate as given by the Modified Rational Method is:

Q=2.78 x Cv x Cr x rainfall intensity x impermeable area

Cv (Volumetric Runoff Coefficient) =	0.75	
Cr (routing coefficient) =	1.3	
A (contributing area) =	0.5931	ha

Rainfall Intensity Calculation:

M5-60 =	18.2	mm/hr
Ratio R =	0.35	
Storm Duration	15	min
M1-15	26.884	
M30-15	65.768	
M100-15	84.916	

Therefore based on an impermeable area runoff coefficient of 75%, the peak run off rates for 0.5931 hectare are:

Peak Run off Rates

Q1	**43.22**	**l/s**
Q30	**105.73**	**l/s**
Q100	**136.51**	**l/s**

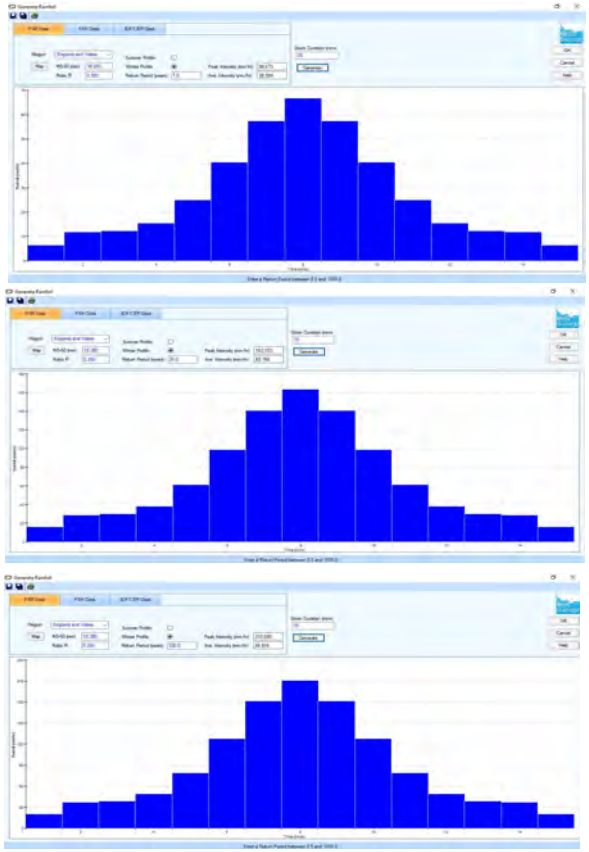

Calculation as per "The Wallingford Procedure: Design and Analysis of Urban Storm Drainage" Volume 4. Using average intensity rainfall taken from MicroDrainage

Appendix J
Greenfield Runoff Rate

Greenfield Run Off Calculations

Project:	Project Ref:	Date:	By:	Checked:
Reliance St HWRC	216352	16.05.22	MH	JL

Canham Consulting
Structural Engineers Civil Engineers Building Surveyors

GREENFIELD RUN OFF

QBAR (1.08(A/100)^0.89)*(SAAR^1.17)*(SPR^2.17)

A=		50	
SAAR (mm)=		810	
SPR=		0.53	
	QBAR=	371.632	
	PER ha	7.433	
	SITE	0.5931	ha
	SITE QBAR (MEAN ANNUAL PEAK FLOW)	4.41	l/s
	GC30	2.4	
	GC100	3.5	
SITE Q1yr	(SITE QBAR/A)*0.85	3.75	l/s/ha
SITE Q30yr	(SITE QBAR/A)*GC30	10.58	l/s/ha
SITE Q100yr	(SITE QBAR/A)*GC100	15.43	l/s/ha

Note: Calculations based on "Rainfall runoff management for developments" Report SC030219 by Environment Agency

Canham Consulting

Structural Civil Building Engineers

Canham Consulting Ltd
The Old School, School Lane, Thorpe St Andrew,
Norwich, Norfolk, NR7 0EP

Tel: 01603 430650
Email: mail@canhamconsulting.co.uk
www.canhamconsulting.co.uk