This drawing is the property of Technical Signs and must not be reproduced in part or in full without prior consent of Technical Signs.

EXISTING

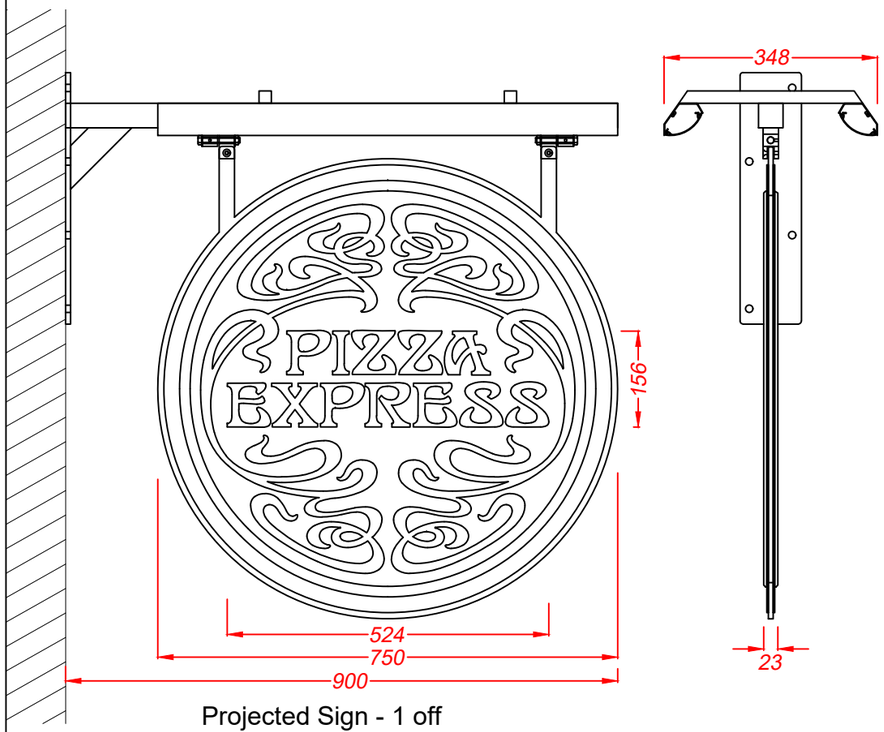

Projected Sign - 1 off
Scale 1:10
Flat cut 8mm aluminium panel is finished satin black and hangs from swing blocks which are welded to a black steel projecting arm.
Inset and flat cut 2.5mm aluminium discs are finished blue RAL 5002 and are bonded onto both faces of the black panel.
Logos are chamfered white 069 acrylic which is bonded to the blue aluminium discs.
Sign is externally illuminated by two black troughs which are fitted with low energy white LEDs.

0m 0.5m

Roundel - 2 off
Scale 1:5
Manufactured from a 1.2mm descaled stainless steel face rim, back and return which are all finished satin black.
Rim holds a 6mm toughened glass face which is backed by a black and white vinyl print which is translucent for the white logo graphics.
Blue vinyl ring for a blue illuminated outer circle.
Internally illuminated by low energy white LEDs.
Fixed immediately behind the glazing by two black steel 25x25mm SHS vertical arms which stretch upwards for fixings at the top of the window recess.
Each arm is welded to a black 5mm steel fixing plate which each have two M8 bolt fixings.

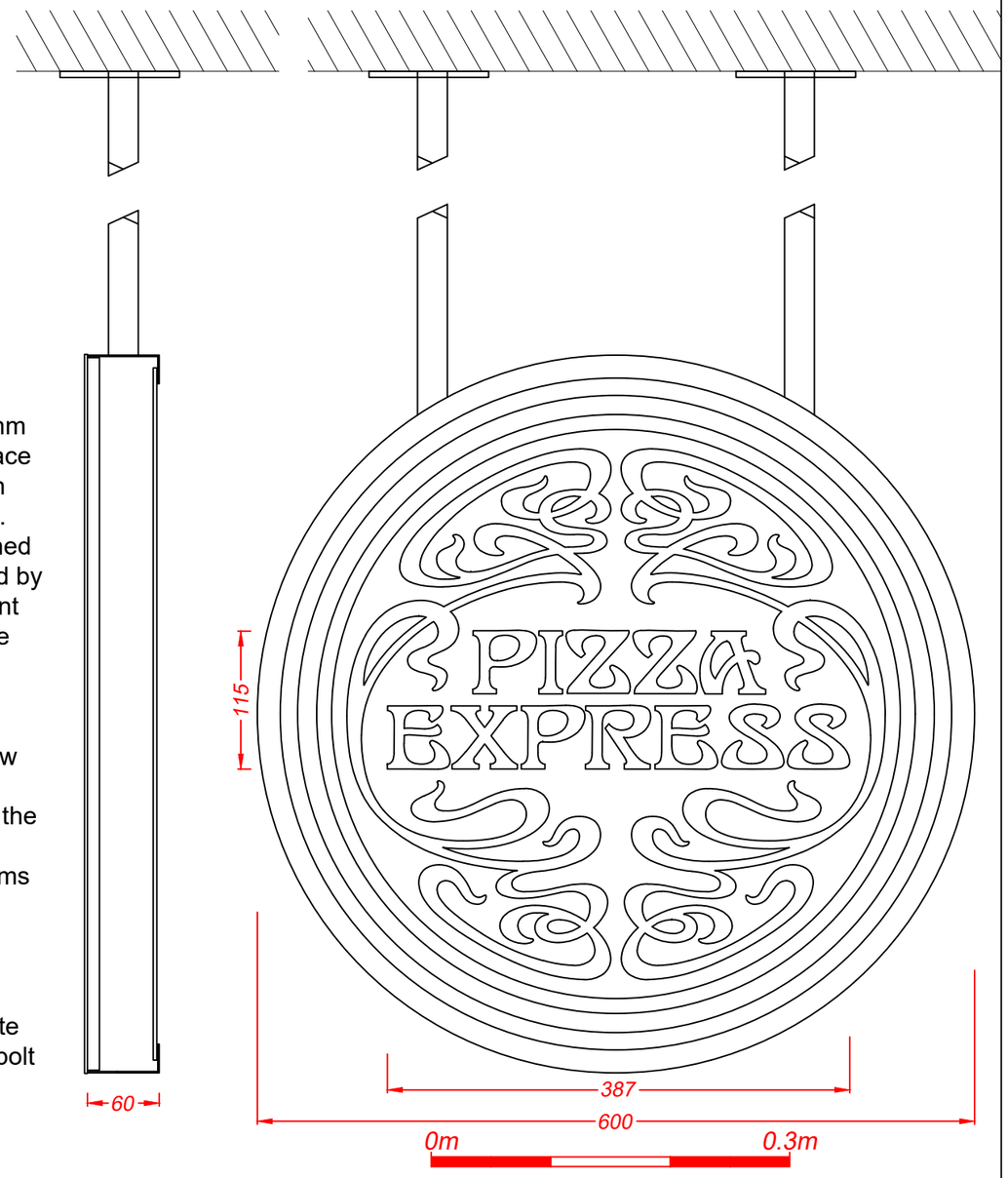

Technical Signs
Floor 1 - Unit 3
Hille Business Centre
132 St Albans Road
Watford, Herts, WD24 4AE
Tel: 01923 811999
Fax: 01923 811998
E-mail: info@technicalsigns.co.uk

Client	Pizza Express
Address/Job details	3A The Triangle Exchange Square Manchester M4 3TR Existing Signs
Job No	
Drawn by	DN
Date	05/03/25
Scale	As specified (A3)
Drawing No	597029-2
Rev	