ELTA

VERSALINE VL

Installation & Maintenance

These instructions must be read fully before commencing installation.

VERSALINE VL

Installation Instructions

AC

1. **WARNING** - This fan is fitted with a non self-resetting thermal cut-out which switches the fan off in the event of a fault condition. To reset, turn the power off for one minute, then back on. Only a suitably qualified and competent person may carry out maintenance after the electrical supply has been isolated.

CAUTION - In order to avoid a hazard due to inadvertent resetting of the thermal cut-out, this appliance must not be supplied through an external switching device, such as a timer, or connected to a circuit that is regularly switched on and off by the utility.

WARNING - The appliance can only be used indoors.

2.0 General

2.1 It is important these Installation and Maintenance Instructions are fully adhered to.

2.2 Full details of the unit supplied are shown on the product nameplate. If in doubt about any detail contact Elta or its agents for clarification.

2.3 All electrical installation must be carried out by suitably qualified and competent personnel in accordance with all current statutory requirements.

2.4 These instructions cover only the Elta Ltd product and do not include the supply or installation of any safety equipment that may be required e.g. adequate guarding or protection from rotating parts and proper electrical isolation.

2.5 Any declarations made by Elta Ltd about product installation and safety, are dependent on the fan equipment being used within installations which themselves meet the requirements of the relevant Standards and Directives of your region.

2.6 The fan is designed for use in up to 95% relative humidity. The fan is not suitable for corrosive or explosive atmospheres.

2.7 The installer should provide easy access to the fan to facilitate future maintenance.

2.8 The installer should ensure the fan is adequately supported.

2.9 **The below statement is only applicable to the European market.**
This appliance can be used by children aged from 8 years and above and persons with reduced physical, sensory or mental capabilities or lack of experience and knowledge if they have been given supervision or instruction concerning use of the appliance in a safe way and understand the hazards involved. Children shall not play with the appliance. Cleaning and user maintenance shall not be made by children without supervision.

2.10 **The below statement is only applicable to the non-European market.**
This appliance is not intended for use by persons (including children) with reduced physical, sensory or mental capabilities, or lack of experience and knowledge, unless they have been given supervision or instruction concerning use of the appliance by a person responsible for their safety. Children should be supervised to ensure that they do not play with the appliance.

2.11 Means for electrical disconnection must be incorporated in the wiring installation in accordance with the relevant wiring and electrical regulations.

WARNING -The fan must be isolated from the power supply during installation and maintenance. The fan must be earthed in accordance with the local regulations. The appliance can only be used indoors.

3.0

3.1 Refer to the appropriate wiring diagram. Ensure that all earth connections are made.

3.2 The fan is to be installed so that the blades are more than 2.3m above the floor (for fans intended to be mounted at high level).

3.3 Precaution must be taken to locate the exhaust discharge terminal so as to avoid the backflow of gases into the room from the open flue of gas or other fuel burning appliances.

Owner / installer: The life of this apparatus and its efficiency will be increased if its use and maintenance is carried out in accordance with these instructions and current statutory requirements. The installation and initial adjustments should be carried out by a qualified and competent technician. Elta Limited should be consulted before substituting or fitting parts from another manufacturer. It is the responsibility of the installer to verify that the installation is in accordance with the following standards and the owner is given the current User's Manual.

Any modifications to the fan or its installation, even the smallest modification, change or elimination of security components or pieces that influence the efficiency or loss of ventilation, will result in Elta' warranty being cancelled.

4. Installation

4.1 Upon receipt, the fan equipment should be visually inspected to check for any damage. Ensure that the impeller is free to rotate.

4.2 If there are any queries concerning the fan equipment, Elta should be contacted prior to the installation.

4.3 Use the mounting bracket set supplied with the VL fan to fix the fan in the desired position to suit the application. The fan can be mounted at any angle. If the fan is mounted with vertical outlet, a weather proof cover must be installed at the ducted outlet.

VERSALINE VL

Installation Instructions

AC

VL100, VL125 and VL150

Screw bracket side to fan using self tapping screws. (a)

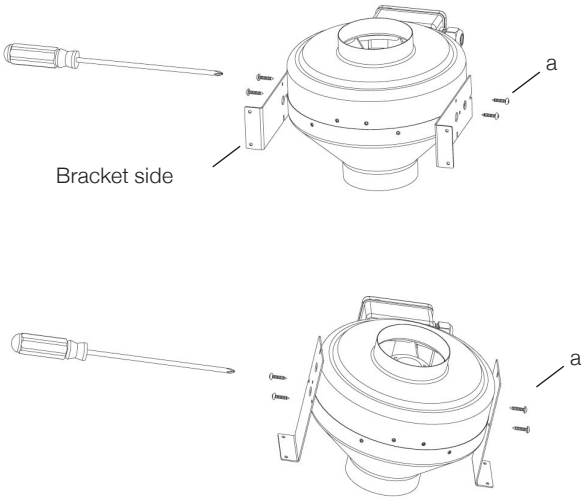

Mounting bracket set (supplied)

VL100, VL125 and VL150 2 off bracket sides.

Fixings set (supplied)

a. 4 off M4x8mm Phillips hexagon with pad flange head self tapping screws

Tool requirements (not supplied)

Phillips head point size #1 screw driver

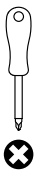

VL200, VL250 and VL315

Screw bracket side to fan using self tapping screws.
(a) Bolt the bracket support/spacer using the button head screws.

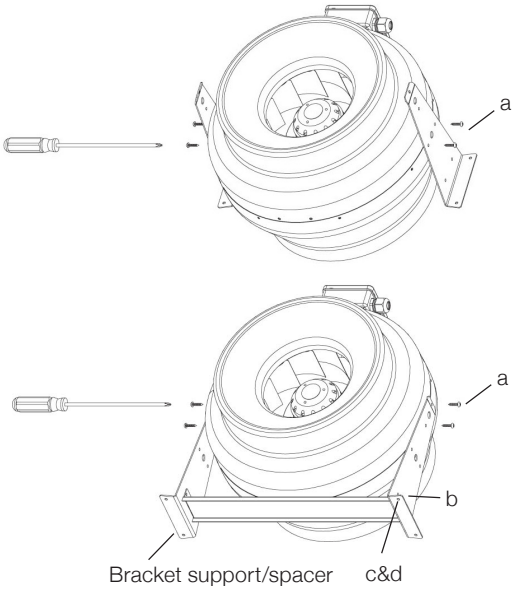

Mounting bracket set (supplied)

VL200, VL250 and VL315 2 off bracket sides,
1 off bracket support/spacer.

Fixings set (supplied)

a. 4 off M4x8mm Phillips hexagon with pad flange head self tapping screws
b. 4 off M4x15mm button head screws
c. 4 off M4 hexagon nuts
d. 4 off flat washers

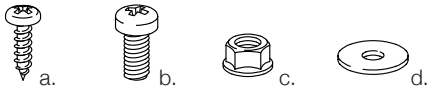

Tool requirements (not supplied)

Phillips head point size #1 screw driver
7mm Hexagon Socket Wrench or Spanner
Hand Tool

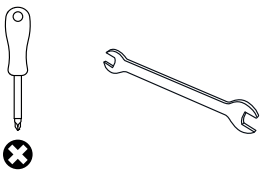

Elta Limited has a policy of continuous product development and improvement and therefore reserves the right to supply products which may differ from those illustrated and described in this publication.
Confirmation of dimensions and data will be supplied on request.

4.4 A minimum of 1 metre of duct at least the same diameter as the fan spigots diameter is to be fitted to the fan inlet and discharge spigots. Fans can be pushed directly into the duct and fastened. Make sure the ducting system is not deformed or twisted. For mounting, we recommend using cushioned fast clamps to reduce noise transmission into the ducting system. This requires a tool for fixing.

4.5 Minimum 150mm clearance between the fan and the surrounding structure should be reserved. See dimensional data section 7.

4.6 Unit is pre-fitted with mains lead and UK 3-pin plug for ease of connection, for alternative connection refer to 4.7.

4.7 Each VL unit comes pre-fitted with an M20 cable gland, tightened to the terminal box to 50N force. Suitable for receiving a HO5VV-F 3 x 0.5-1.5mm² cable between 7mm minimum diameter and 10mm maximum diameter. Strip the cable outer sheath exposing the individual cable cores. Leaving sufficient space for the cables to be separated and fixed into the terminal strip connections. Strip each individual core back 10mm, exposing the cable.

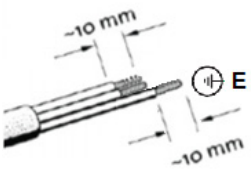

Strip the cable Earth cable must be 10mm longer

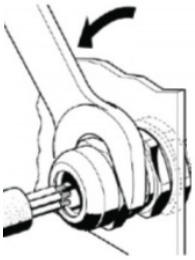

Loosen the dome cap

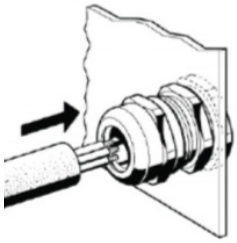

Push cable through the gland

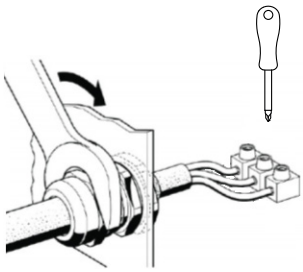

Cable must not be taut
Inside the terminal box
Tighten the dome cap

Ensure the dome cap is tightened enough that the cable is securely clamped and cannot move.

Tool requirments (not supplied)
24mm Spanner
Terminal screw driver

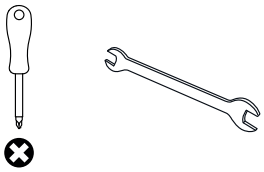

4.8 If the supply cord is damaged, it must be replaced by the manufacturer, its service agent or similarly qualified persons in order to avoid hazards.

4.9 Check the details on the motor rating plate to ensure that the correct power supply (voltage, frequency and phase) is available. An incorrect power supply will lead to permanent damage to the fan motor.

5. Start-up

5.1 Before power is supplied to the unit, check that the wiring is correct as per the fan connection diagram.

5.2 At initial start-up, check that impeller rotation and airflow direction is correct.

5.3 Check that the motor amperage draw does not exceed the nameplate rating.

6. Fan Maintenance

6.1 Inspection of the fan at least once every 12 months is recommended to ensure that the motor, fan blades, and supporting guards, are clean. Any build up of dust and deposits on the blades or guards should be removed using a non-abrasive cleaner.

6.2 All fastenings should be checked for tightness. In addition, all rotating items should be checked.

6.3 Bearings are of the ‘sealed for life’ type and will not need a detailed inspection.

VERSALINE VL

Installation Instructions

AC

General Sales

Code	Article No.	Supply	FL Amps	Watts	r/min
VL100	008000	220-240V/1Ph/50-60Hz	0.14-0.13	26-25	2725-3150
VL125	008001	220-240V/1Ph/50-60Hz	0.14-0.12	26-25	2690-3200
VL150	008002	220-240V/1Ph/50-60Hz	0.28-0.36	65-84	2595-2858
VL200	008003	220-240V/1Ph/50-60Hz	0.46-0.60	105-130	2565-2900
VL250	008004	220-240V/1Ph/50-60Hz	0.48-0.57	106-130	2555-2950
VL315	008005	220-240V/1Ph/50-60Hz	0.69-0.84	158-182	2190-2600

Elta Limited has a policy of continuous product development and improvement and therefore reserves the right to supply products which may differ from those illustrated and described in this publication.
Confirmation of dimensions and data will be supplied on request.

VERSALINE VL

Dimensional Data

7. Dimensional Data

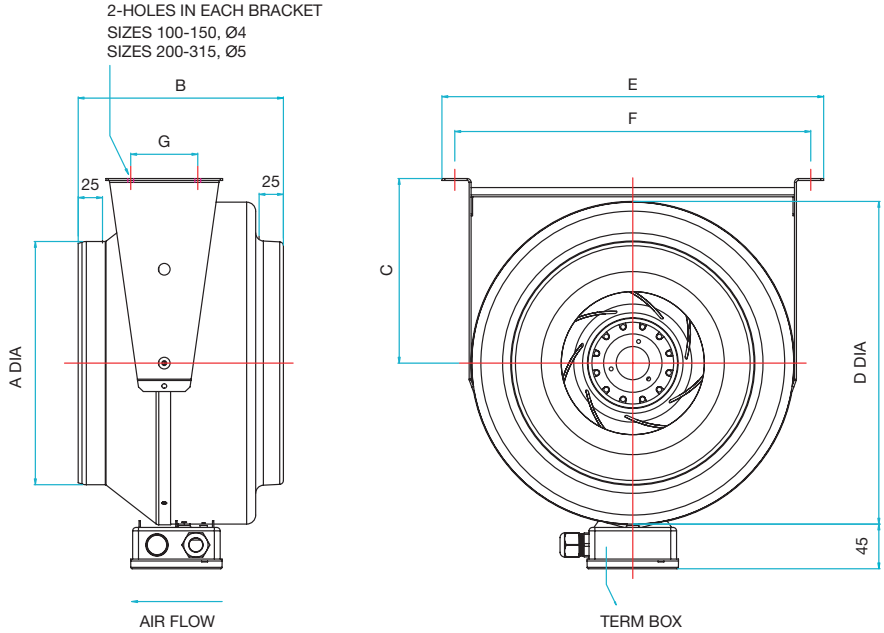

Product Code	A	B	C	D	E	F	G	Weight kg
VL100	98	204	130	237	284	270	47	3.7
VL125	123	202	130	237	284	270	47	3.7
VL150	148	195	165	278	326	312	47	3.6
VL200	198	242	190	333	392	372	100	5.5
VL250	248	210	190	333	392	372	100	5.3
VL315	313	280	227	400	460	440	100	8.8

7.1 Minimum space required for installation

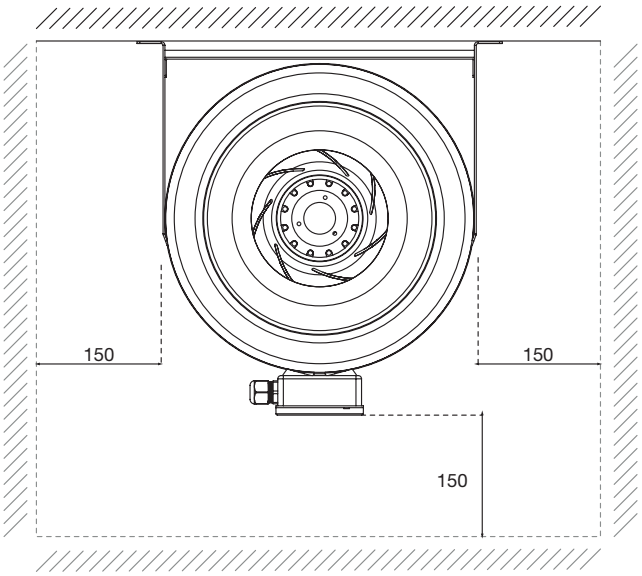

Dimensions are in mm.

Tel **01384 275800** Fax **01384 275810** Email **info@eltauk.com** Website **eltauk.com**

152-001

Wiring Diagrams

AC

8. Wiring

Unit is pre-wired with flying lead and UK 3-pin plug, where connection to control devices (all units) or change of operating speed (Units 150-315) refer to diagrams below.

8.1 VL100 - 125.

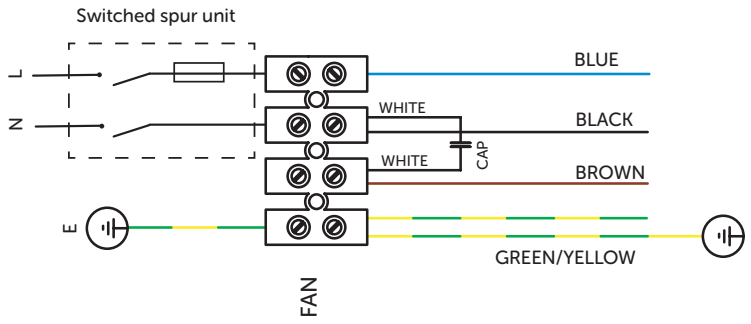

220-240/1Ph/50-60Hz SUPPLY

8.2 VL150 - 315.

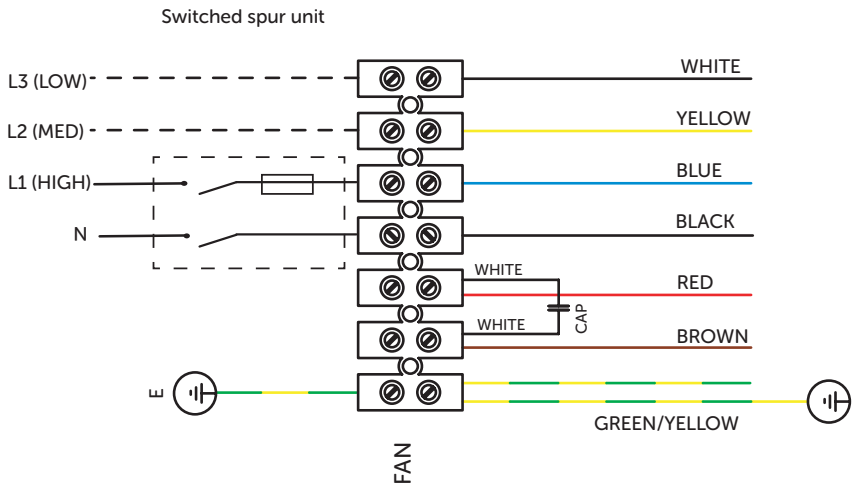

220-240/1Ph/50-60Hz SUPPLY

Guarantee

Elta or its agents will, within a period of one year from the date of dispatch from their works, at its option, replace any goods, which are proven to have defects as a result of defective materials or workmanship. The goods must be inspected by a Elta official and if necessary returned, with a Returns Note Number, carriage paid, for further examination.

Elta Limited has a policy of continuous product development and improvement and therefore reserves the right to supply products which may differ from those illustrated and described in this publication. Confirmation of dimensions and data will be supplied on request.

Hydor and Elta, are Companies and brands,
wholly owned by the Elta Group Limited

Tel **+44 (0) 1384 275800**
Email **info@eltauk.com**
eltauk.com

535-IOM0082 Issue C

BS EN ISO 9001:2015 FM 556465

A member of HEVAC ASSOCIATION

CIBSE PATRONS

A MEMBER OF ELTA GROUP