N

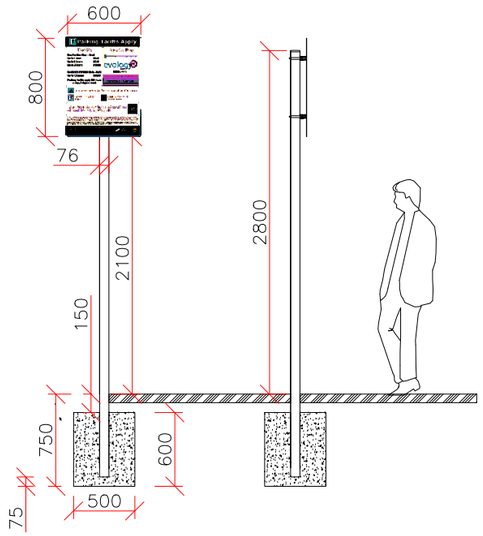


SIGN 2
POLE MOUNTED
600MM x 800MM

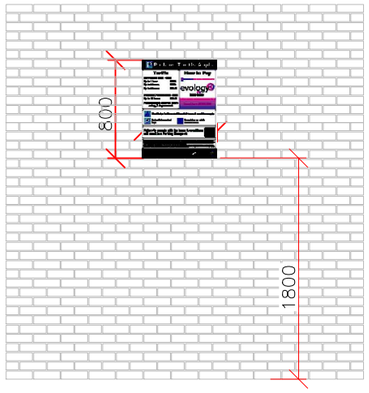


SIGN 2
WALL MOUNTED
600MM X 800MM

Sign 1
EXISTING FENCE MOUNTED
600MM X 800MM

WALL MOUNTED
SIGN 5
1000MM X 5000MM

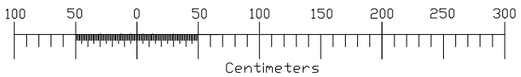


Notes:

1. Contractors to check dimensions and notify any discrepancies or errors to the company immediately.
2. Work to figured dimensions only and to be checked before commencement of work on site.
3. Drawing is already to scale.
4. All dimensions in millimeters unless otherwise stated.

Legend:

| | |
|---|---|
| | Land Boundary |
| | Site Plan |
| (P) | Pole Mounted |
| (CC) | Camera Column Mounted |
| (W) | Wall Mounted |
| (ELC) | Exisiting Lighting Column |

Parkingeye


Office Contact:
40 Eaton Avenue, Matrix Park, Buckshaw Village, Chorley, Lancashire, PR7 7NA

Tel: 01772 450 970

Emails: Planning@parkingeye.co.uk


| | |
|---|---|
| Client: | Vision One Developments Ltd |
| Project: | Manchester Hall |
| Title: | Signage Elevations |
| Scale: | 1:50 |
| Drawn: | Yaseen Laher, Y.Laher |
| Date: | 14/05/2025 |
| Drawing Reference Number: | C-30566-004 |
| Drawing Rev: | Rev A |