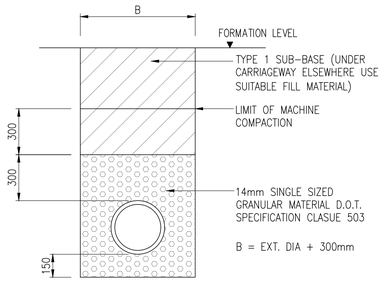

CLASS 'S' BEDDING DETAIL

TYPE 'S' BEDDING TO BE USED FOR PIPES GENERALLY IN FOOTWAY AND LANDSCAPED AREAS, AND FOR PIPES UNDER TRAFFICKED AREAS WITH MORE THAN 1.2m COVER

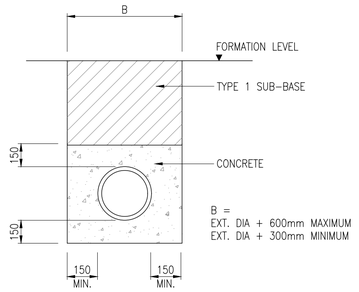

DETAIL OF CLASS 'Z' CONCRETE SURROUND

(FOR PIPES UNDER TRAFFICKED AREAS WITH <1.2m COVER)

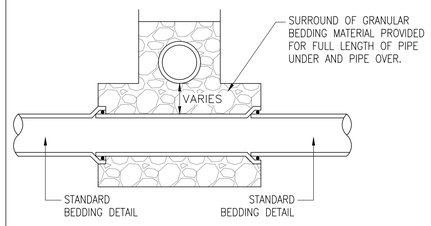

PIPE CROSSINGS OVER

STANDARD MIX	GRADE OF CONCRETE	APPLICATIONS
ST1	C7.5	FILLINGS, BLINDINGS, SOFT SPOTS AND DRAINAGE SUMPS
ST4	C20	ALL OTHER APPLICATIONS

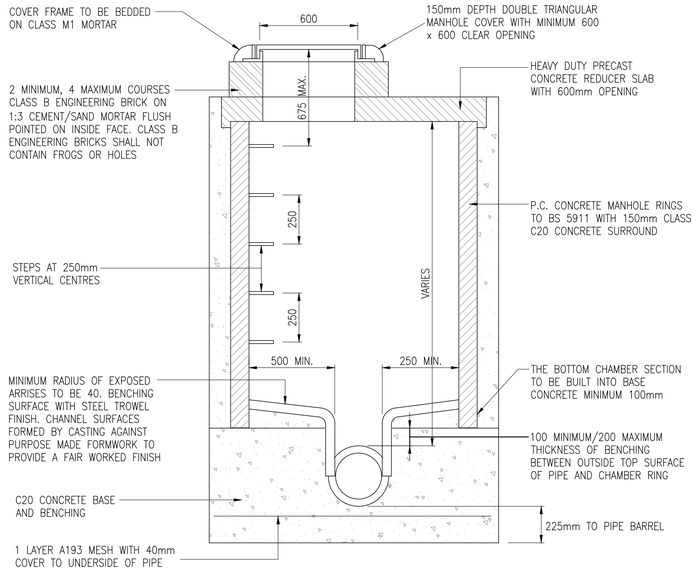

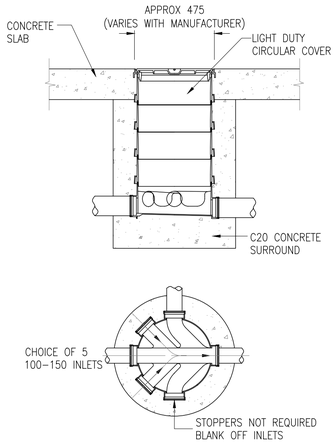

POLYPROPYLENE INSPECTION CHAMBER DETIALS

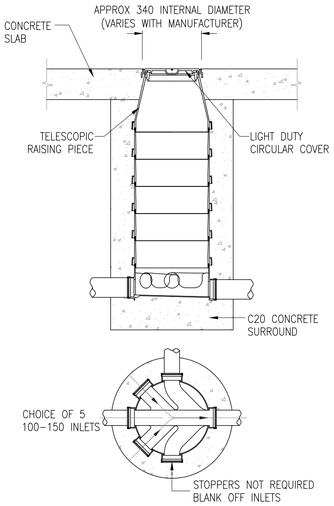

REDUCED ACCESS INSPECTION CHAMBER DETIALS (DEPTH 1.1m < 3m)

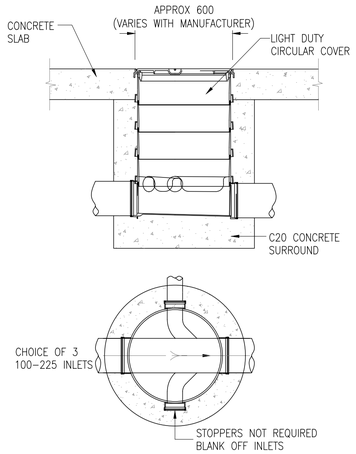

POLYPROPYLENE INSPECTION CHAMBER DETIALS – 600mmø FOR PIPES > 150mmø

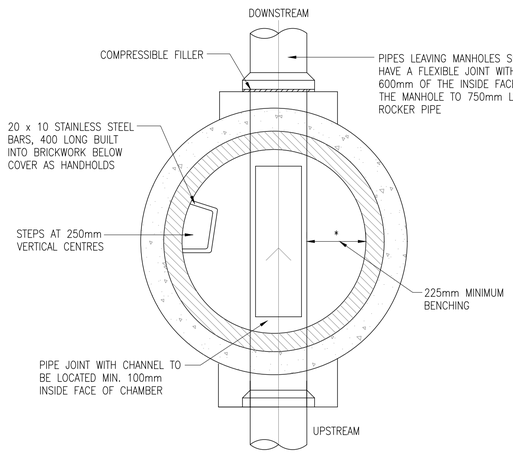

TYPICAL MANHOLE TYPE B

(MAX. DEPTH FROM GROUND LEVEL TO SOFFIT OF PIPE 3.0m)

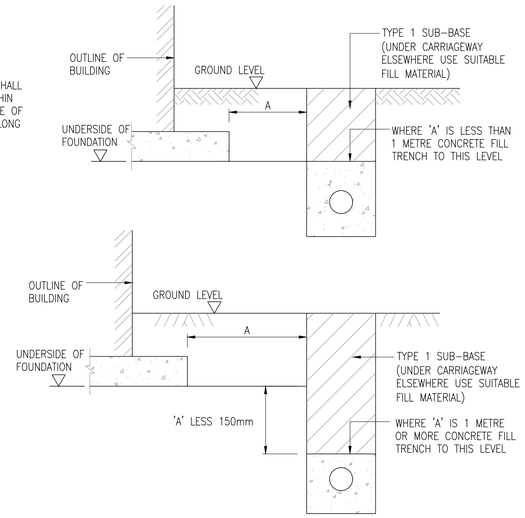

TRENCH DETAIL FOR FW AND SW PIPE RUNS NEAR BUILDING FOUNDATIONS

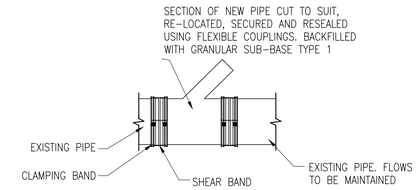

A SUITABLE SECTION OF PIPE IS CUT AND REMOVED FROM THE EXISTING PIPELINE, THE NEW JUNCTION IS LOCATED, THE ORIENTATION OF THE JUNCTION ARM ESTABLISHED AND THE NEW JUNCTION SECURED AND SEALED INTO THE PIPELINE USING FLEXIBLE COUPLINGS

NOTE

1. THE REPLACEMENT PIPE OR JUNCTION SHOULD LEAVE A TOTAL LENGTH OF 20MM LESS THAN THAT BETWEEN THE CUT ENDS OF THE EXISTING PIPELINE.
2. COUPLINGS SHOULD BE TIGHTENED EITHER STARTING WITH THE SHEAR BAND FOLLOWED BY THE CLAMPING BANDS OR WORKING ACROSS THE COUPLINGS FROM ONE OF THE CLAMPING BANDS.
3. IT IS IMPORTANT TO ENSURE THAT THE ENDS OF THE PIPES ARE CUT SQUARE AND THAT THERE IS SUFFICIENT CLEARANCE BETWEEN THE ENDS OF THE PIPES TO ALLOW FLEXIBLE MOVEMENT TO TAKE PLACE.

JUNCTION INSERTION

GENERAL NOTES

1. ALL DIMENSIONS ARE IN MILLIMETRES UNLESS OTHERWISE SHOWN. SETTING OUT SHALL BE UNDERTAKEN USING ONLY THE INFORMATION GIVEN. DISTANCES SHOULD NOT BE SCALED FROM THIS DRAWING
2. ALL DRAINAGE WORKS SHALL BE CONSTRUCTED IN ACCORDANCE WITH THE DCG (THE CODE)
3. ALL EXISTING INVERT LEVELS TO BE CHECKED BY THE CONTRACTOR AT THE START OF WORKS AND ANY OTHER DISCREPANCIES NOTIFIED TO THE ENGINEER. ALL LEVELS ARE BASED ON TOPOGRAPHICAL SURVEY INFORMATION PROVIDED BY OTHERS.
4. IT IS THE RESPONSIBILITY OF THE CONTRACTOR TO VERIFY ALL INFORMATION GIVEN WITH REGARDS TO EXISTING SERVICES AND DRAINAGE CONNECTIONS ETC. PRIOR TO COMMENCING THE WORKS. THE RATES SHALL INCLUDE FOR HAND DIG AROUND SERVICES WHERE NECESSARY. THE CONTRACTOR SHALL ADHERE TO THE CDM REGULATIONS AT ALL TIMES
5. THE OUTSIDES OF ALL SEWERS SHALL BE A MINIMUM OF 1.0m FROM KERB LINES AND THE OUTSIDE OF MANHOLES SHALL BE A MINIMUM OF 0.5m FROM KERB LINES
6. EXISTING FLOWS IN WATERCOURSES, SEWERS AND LAND DRAINS SHALL BE MAINTAINED AT ALL TIMES
7. ONLY TRAINED PERSONNEL SHALL BE PERMITTED TO ENTER CONFINED SPACES
8. ALL MATERIALS TO BEAR THE RELEVANT B.S. KITEMARK AND COMPLY FULLY WITH THE SPECIFICATIONS. ALL CONCRETE & CONCRETE PRODUCTS MUST USE SULPHATE RESISTANT CEMENT (UNLESS THE SITE INVESTIGATION REPORT PROVES THAT SULPHATE ATTACK FROM SOILS AND GROUNDWATER WILL NOT OCCUR TO WITHSTAND A CLASS
9. ALL OPENING NOTICES ETC. AS REQUIRED UNDER HIGHWAYS ACTS ETC. ARE TO BE OBTAINED PRIOR TO COMMENCEMENT OF WORKS. ALL WORKS ARE TO BE INSPECTED BY L.A., NHBC OR THE NETWORK OPERATOR AS APPLICABLE.
10. WHERE "ULTRA RIB" UPVC PIPES (OR SIMILAR APPROVED) ARE USED IN ADOPTABLE DRAINAGE THEY SHALL STILL BE HANDLED AND LAID IN ACCORDANCE WITH THE SPECIFICATION AND GUIDANCE ISSUED BY THE HIGH PERFORMANCE PIPE ASSOCIATION. A CLASS S BED AND SURROUND MUST BE USED FOR SUCH PIPES.
11. TRENCH BACKFILL IN HIGHWAYS / CAR PARKS TO WITHIN 1M OF HIGHWAY SHALL BE A SUITABLE GRANULAR MATERIAL ALL IN ACCORDANCE WITH SEWERS FOR ADOPTION CL. 3.3.4. BACKFILL MATERIAL IN OTHER AREAS SHALL BE SELECTED EXCAVATED MATERIAL FREE FROM STONES LARGER THAN 40MM, LUMPS OF CLAY OVER 100MM, TIMBER, FROZEN MATERIAL OR VEGETABLE MATTER.
12. UPVC PIPES AND FITTINGS SHALL COMPLY WITH WIS 4-35-01. CLAY PIPES AND FITTINGS SHALL BE EXTRA STRENGTH TO BSEN 295 AND BS 65. CONCRETE PIPES AND FITTINGS SHALL COMPLY WITH BS 5911 , PIPES SHALL BE CLASS H.
13. A CLASS S BED MUST BE PROVIDED TO UPVC PIPES , A CLASS B BED MAY BE USED FOR V.C. AND CONCRETE PIPES.
14. BACKFILL TO DRAINAGE TRENCHES ABOVE PIPE BEDDING AND SURROUND WITHIN ROAD AND CAR PARK AREAS TO BE GRANULAR FILL COMPLYING WITH CLASS 6F2 OR DOT TYPE 1 OR QUARRY SCALPING GRADED FROM 75mm DOWN.
15. A CONCRETE SURROUND IS NOT NORMALLY REQUIRED TO MANHOLES UNLESS INSTALLED IN AREAS OF UNSTABLE GROUND ,UNDER CONDITIONS OF FLOATATION OR WHERE SUBJECTED TO EXCEPTIONAL OR ECCENTRIC LOADS, IN WHICH CASE A 150mm SURROUND OF AT LEAST 20N/mm2 CONCRETE SHOULD BE PROVIDED. ANY JOINTS SHOULD BE STAGGERED WITH THE PRECAST CONCRETE JOINTS.
16. DOUBLE STEPS SHALL BE PLASTIC ENCAPSULATED CARBON TO BS EN 1247-2 MANHOLE STEPS. STEP IRONS AT 300ctrs. HORIZONTALLY & VERTICALLY MAY BE USED AS AN ALTERNATIVE TO DOUBLE STEPS.

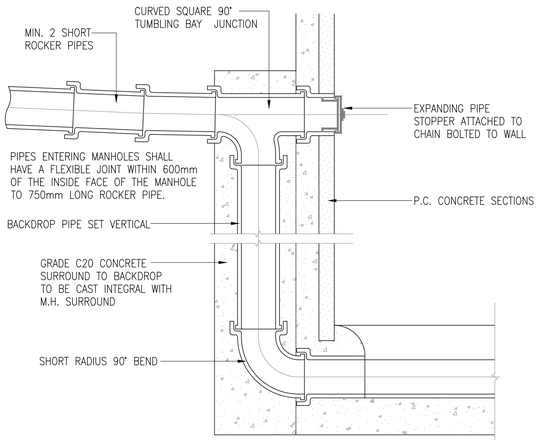

TYPICAL VERTICAL BACKDROP DETAIL

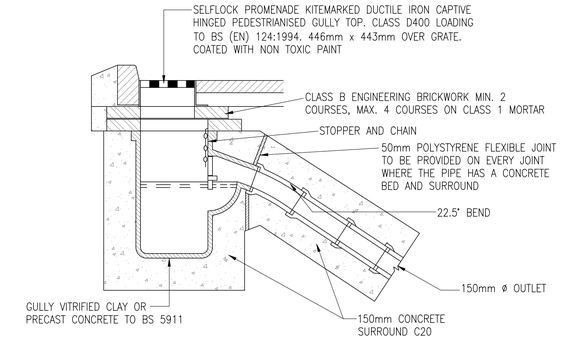

GULLY GRATING AND FRAME TO BS EN 124 CLASS D (40 TONS)

	GULLY FRAME		
SIZE OF GULLY (mm)	MIN.WIDTH	MIN.AREA OF WATERWAY	MIN.DEPTH OF FRAME
450x900 DEEP	450mm	900cm²	75mm

NOTES
1. GULLY, GRATING AND FRAME TO COMPLY WITH BS EN 124
2. BACKFILL TO GULLY CONNECTIONS BELOW FORMATION IN CARRIAGEWAYS SHALL BE TYPE 1 SUB-BASE MATERIAL. WHERE MECHANICAL COMPACTION IS IMPRACTICAL THE BACKFILLING SHALL BE GRADE C10P/20 CONCRETE.
3. GULLY GRATING AND FRAME TO BE HINGED TYPE.

TYPICAL ROAD GULLY DETAIL

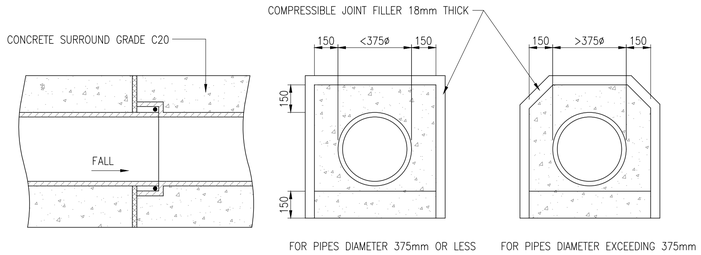

DETAILS OF FLEXIBLE JOINT FOR PIPES WITH CONCRETE SURROUND (150mm THICK) PROVIDED AT EACH PIPE JOINT

REV	DATE	DESCRIPTION	BY	CHK	APP
C01	22.10.2024	RIBA STAGE 5 (CONSTRUCTION) ISSUE	JJR	JCM	JCM
P01	11.12.2023	PRELIMINARY ISSUE	JPR	JCM	JCM

DRAWING STATUS: **PRELIMINARY**

CLIENT: CASEY

ARCHITECT: JOHN MCCALL ARCHITECTS

PROJECT: PALGRAVE AVENUE P500 MANCHESTER

TITLE: TYPICAL DRAINAGE DETAILS SHEET 1 OF 2

STATUS:	PROJECT No.	PROJECT - ORIGINATOR - VOL/SYS - LEVEL - TYPE - ROLE - DRAWING No.	REV:
S2	223-150	PAL - AJP - ZZ - 00 - DR - **C - 1060**	**P01**

SCALE @ A1:	DESIGNED:	DRAWN:	CHECKED:	APPROVED:	DATE:
1:20	JPR	JPR	JCM	JLS	NOV 2023

AJP consulting engineers
0151 227 1462 info@ajpltd.co.uk 91 Dale Street, Liverpool, L2 2ET