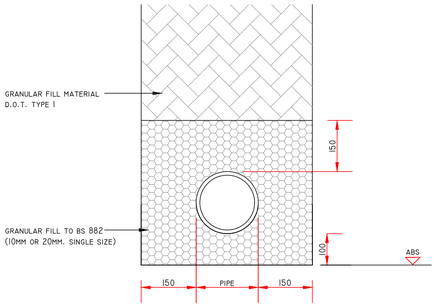


CLASS S BEDDING
N.T.S

ALL AREAS NOT REQUIRING CLASS Z BEDDING

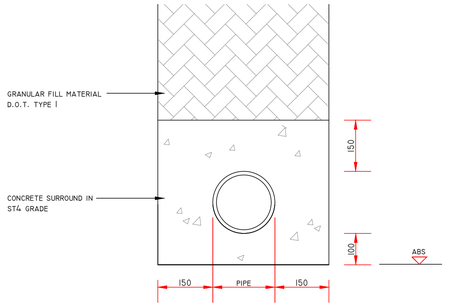


CLASS Z BEDDING
N.T.S

UNDER EXTERNAL AREAS WHERE PIPE CROWN IS LESS THAN 750MM BELOW SURFACE OF AREAS ACCESSIBLE TO TRAFFIC OR LESS THAN 400MM BELOW SURFACE IN ANY OTHER AREA. (N.B. FORM VERTICAL CONSTRUCTION JOINTS AT FACE OF ALL FLEXIBLE PIPE JOINTS IN 18MM COMPRESSIBLE BOARD)

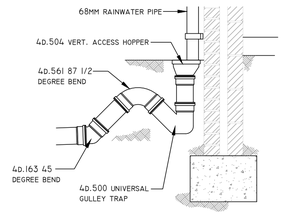


RAINWATER PIPE DETAIL
N.T.S

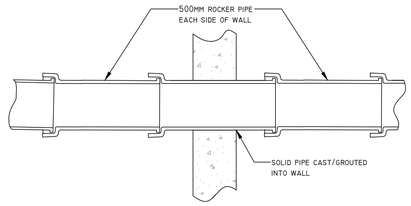


ROCKER PIPE DETAIL
N.T.S

TO BE USED WHERE PIPES CROSS THROUGH WALLS OR OTHER SOLID OBJECTS, OR PASS INTO CONCRETE MANHOLES, OR CHANGE FROM CLASS S TO CLASS Z BEDDING

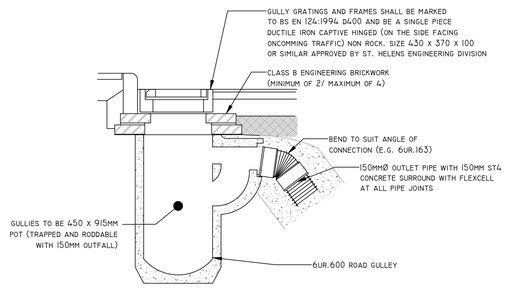


ROAD GULLY DETAIL
N.T.S

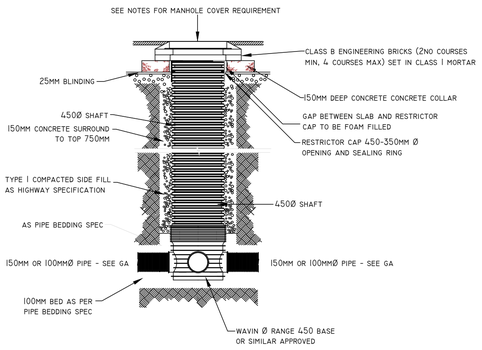


TYPICAL PPIC MANHOLE DETAIL
N.T.S

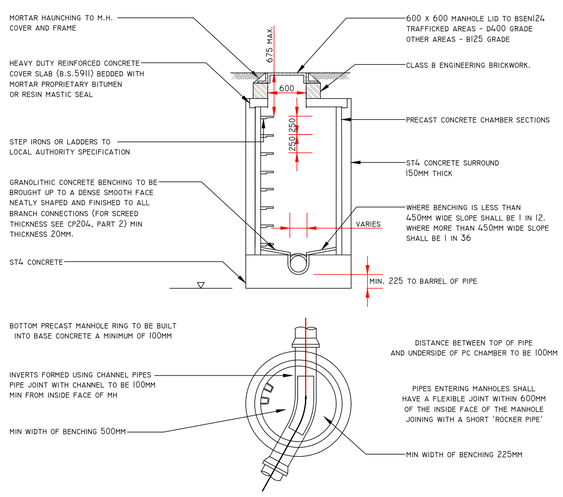


TYPICAL PRECAST CONCRETE MANHOLE DETAIL
N.T.S

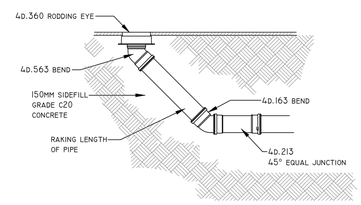


RODDING EYE DETAIL
N.T.S

GENERAL NOTES:

1. THIS DRAWING IS COPYRIGHT AND THE PROPERTY OF BELL MUNRO CONSULTING LTD. THE DRAWING MUST NOT BE REPRODUCED IN PART OR IN WHOLE WITHOUT PRIOR WRITTEN AUTHORITY.

2. THIS DRAWING MUST NOT BE SCALED BY EITHER CONTRACTORS OR OTHER CONSULTANTS ANY DIMENSIONAL OR SETTING - OUT DISCREPANCIES ARE TO BE REPORTED TO BELL MUNRO CONSULTING PRIOR TO CONSTRUCTION / FABRICATION COMMENCING.

3. THIS DRAWING MUST BE READ IN CONJUNCTION WITH THE RELEVANT BMC SPECIFICATIONS TOGETHER WITH THE APPROPRIATE ARCHITECTS AND SERVICES CONSULTANTS DRAWINGS AND SPECIFICATIONS.

4. ALL DIMENSIONS TO BE CHECKED BY CONTRACTOR PRIOR TO FABRICATION.

5. INSTALLATION OF ALL PROPRIETARY BUILDERS METAL WORK TO BE IN STRICT ACCORDANCE WITH MANUFACTURERS RECOMMENDATIONS.

6. TEMPORARY STABILITY DURING CONSTRUCTION IS THE RESPONSIBILITY OF THE MAIN CONTRACTOR AND SHOULD BE ASSESSED ACCORDINGLY.

DRAINAGE NOTES

1. EXACT SVP AND GULLEY LOCATIONS TO BE CONFIRMED FROM SERVICES ENGINEERS'/ARCHITECTS DRAWINGS AND DETAILS.

2. ALL NEW PIPEWORK TO BE WAVIN OSMADRAIN OR WAVIN ULTRARIB UPVC (OR SIMILAR APPROVED) UNLESS NOTED OTHERWISE.

3. PLASTIC PIPES (PVC-U)TO BE FLEXIBLY JOINTED AND COMPLY WITH THE REQUIREMENTS OF BS EN 1401-1 1998.

4. WHERE COVER TO PIPES IS LESS THAN 750 IN ROADS AND HARDSTANDINGS OR 400 MM ELSEWHERE, CONCRETE SURROUND IS TO BE PROVIDED IN ACCORDANCE WITH THE DETAIL (CLASS Z BEDDING).

5. ALL OTHER PIPEWORK TO BE IN CLASS S BEDDING.

6. N.B. UNTIL FINAL SERVICE IS PLACED, HEAVY TRAFFIC IS NOT TO BE ALLOWED OVER PIPE TRENCHES WITHOUT SPECIAL PRECAUTIONS.

7. PIPES AND FITTINGS ARE TO BE LAID IN ACCORDANCE WITH THE MANUFACTURERS RECOMMENDATIONS.

8. MANHOLE COVERS IN TRAFFICKED AREAS TO BE LOAD CLASS D400 TO BS EN 124.

9. MANHOLE COVERS IN LANDSCAPED AND PAVED AREAS TO BE LOAD CLASS A14 TO BS EN 124.

10. MANHOLE COVERS IN PAVED AREAS TO BE RECESSED TO ACCEPT PAVING FINISH.

11. ACCESS COVERS FOR GULLIES IN KERBSIDES TO BE LOAD CLASS C250 BS EN 124.

12. ALL INTERNAL POP UPS TO HAVE RODDABLE ACCESS.

13. ANY PPIC MANHOLE DEEPER THAN 1200MM MUST BE FITTED WITH ACCESS RESTRICTOR CAP.

14. ALL EXISTING DRAINAGE/SERVICES TO BE CONFIRMED PRIOR TO CONSTRUCTION COMMENCING.

15. PIPEWORK PASSING THROUGH BUILDING WALLS SHALL BE FITTED WITH ROCKER PIPES AS PER STANDARD DETAIL.

16. ANY UNLABELLED FOUL BRANCH PIPEWORK TO BE 100Ø PIPEWORK AT MINIMUM 1:80 FALL.

17. ANY UNLABELLED STORM WATER BRANCH PIPEWORK TO BE 100Ø AT MINIMUM 1:80 FALL.

18. ALL RWP LOCATIONS AND NUMBERS ARE TO BE CONFIRMED BY ARCHITECT PRIOR TO COMMENCING CONSTRUCTION.

19. ALL INTERNAL MANHOLES TO BE FITTED WITH TRIPLE SEALED COVERS

PLANNING
SUBJECT TO APPROVAL
BY LLFA & UU

| REV | COMMENTS | DATE | BY |
|---|---|---|---|
| - | INITIAL ISSUE | 13/01/25 | DB |

BMC

BELL MUNRO
CONSULTING LTD

CONSULTING CIVIL & STRUCTURAL ENGINEERS
TURING HOUSE
5 ARCHWAY
MANCHESTER
M15 5RL
TEL: 0161 2098032
FAX: 0161 2098033
EMAIL: CONSULTING@BELLMUNRO.CO.UK
WWW.BELLMUNRO.CO.UK

CLIENT: SHELLCO 148

PROJECT: DUCIE ARMS

TITLE: DRAINAGE DETAILS

| DRAWN BY: | CHECKED BY: | SCALE: | DATE: |
|---|---|---|---|
| D.B | R.C | NTS | 01/25 |

| DRAWING NUMBER: | REVISION: |
|---|---|
| J8123/D02 | - |