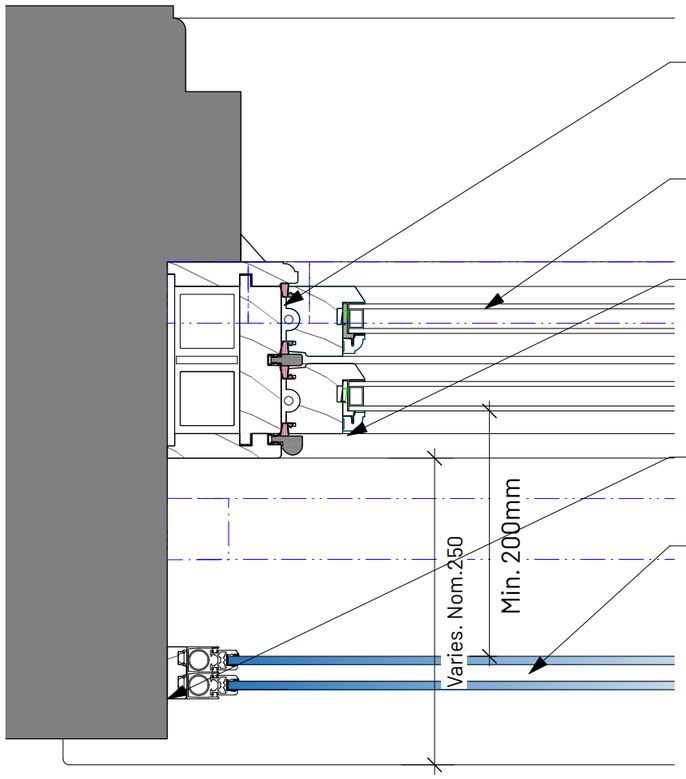

Proprietary timber sash window frame to achieve U-value max 1.4W/m2K. Painted with three coat system.

O/a 24mm thick double glazed unit - overall U-value max 1.4W/m2K

Joinery profile to match existing elsewhere - with minor modification to sash dimensions to accommodate DGU.

Flexible acoustic sealant bead to perimeter.

White painted powder coated aluminium framed vertical sliding secondary glazing. Granada BVS. Set min. 200mm off face of sash glazing. 6.8mm laminated glass to achieve 51dB Rw. Transom located to coincide with sash window transom.

1 Typical Window Reveal - Replacement Sash and Secondary Glazing
Scale: 1:5

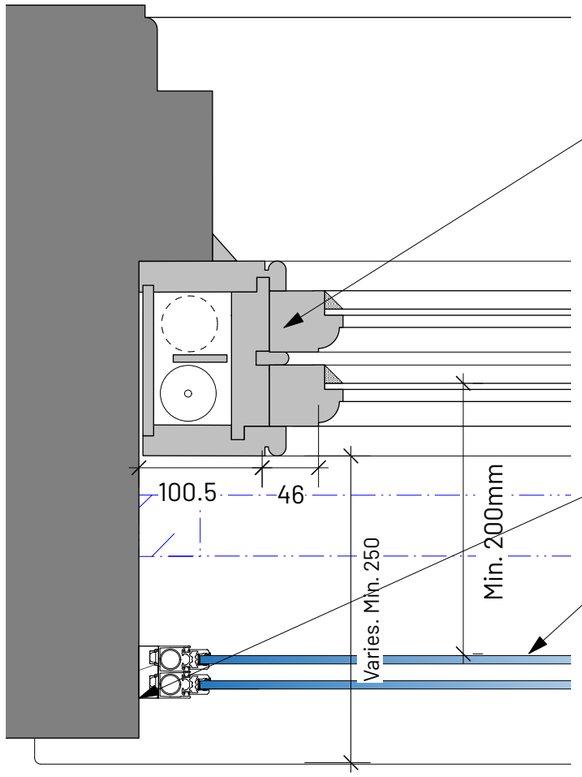

Existing repaired timber sash window frame with 4mm thick glazing. Painted with three coat system.

Flexible acoustic sealant bead to perimeter.

White painted powder coated aluminium framed vertical sliding secondary glazing. Granada BVS. Set min. 200mm off face of sash glazing. 6.8mm laminated glass to achieve 51dB Rw. Transom located to coincide with sash window transom.

2 Typical Window Reveal - Secondary Glazing
Scale: 1:5

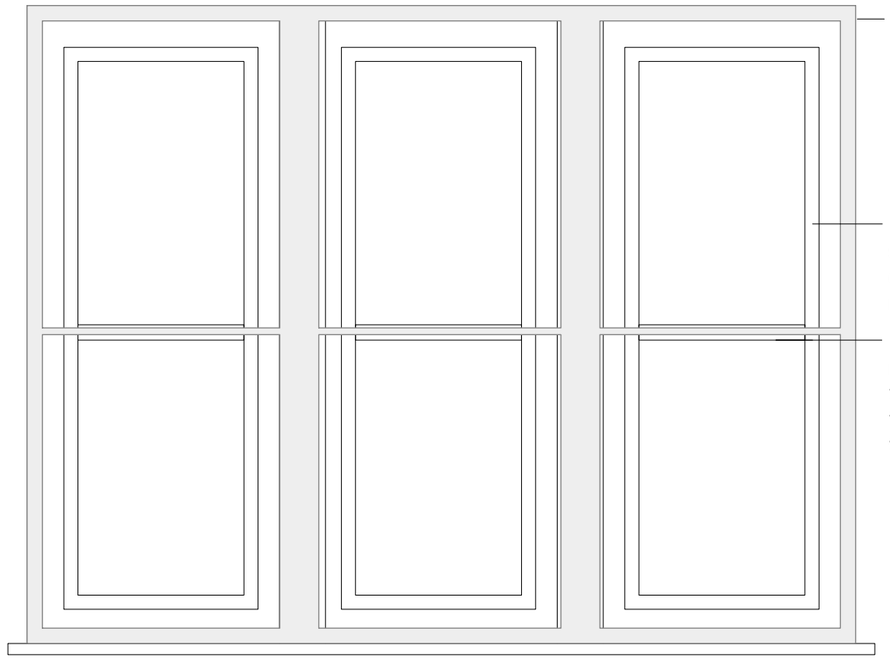

New aluminium framed secondary glazing. Coloured for identification only.

Existing secondary glazing to be removed.

Existing or replacement timber framed sash window

3 Typical Internal Elevation
Scale: 1:20

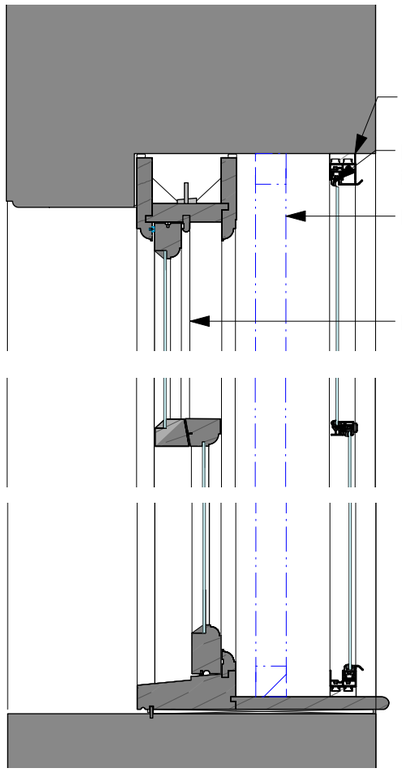

Flexible acoustic sealant bead to perimeter.

New aluminium framed secondary glazing set into reveal

Existing secondary glazing to be removed

Existing or replacement sash window.

4 Window Section
Scale: 1:10

COPYRIGHT OF ATELIER MB LTD
DO NOT SCALE FROM THIS DRAWING
DIMENSIONS TO BE CHECKED ON SITE

Existing

Proposed

Existing Historic Fabric to be Removed

Existing Non-Historic Fabric to be Removed

NOTES

All window frames are to be a good tight fit into the building structure with any gaps to be filled both internally and externally with a non-setting mastic in addition to the usual weather proofing seal to the exterior. Any gaps between the frame and building that are greater than 5 mm are to packed with a dense mineral fibre prior to mastic sealing.

REV	NOTE	DRN	CHK

St Margarets (App. 2), Manchester
For Charlotte Street Estates

Window Details - Deep Reveal

PROJECT REF.	2093
DRWG NO.	P(432)
REVISION	
SCALE	Varies @ A3
DATE 1st	Aug 25
DRAWN	GS

SK sketch E existing P proposed T tender C construction FI final issue

+44 161 236 0051
ARCHITECT@ATELIERMB.CO.UK
ATELIER.MB