NOTE: Elevations show Guardrails in upward position (in-use) .

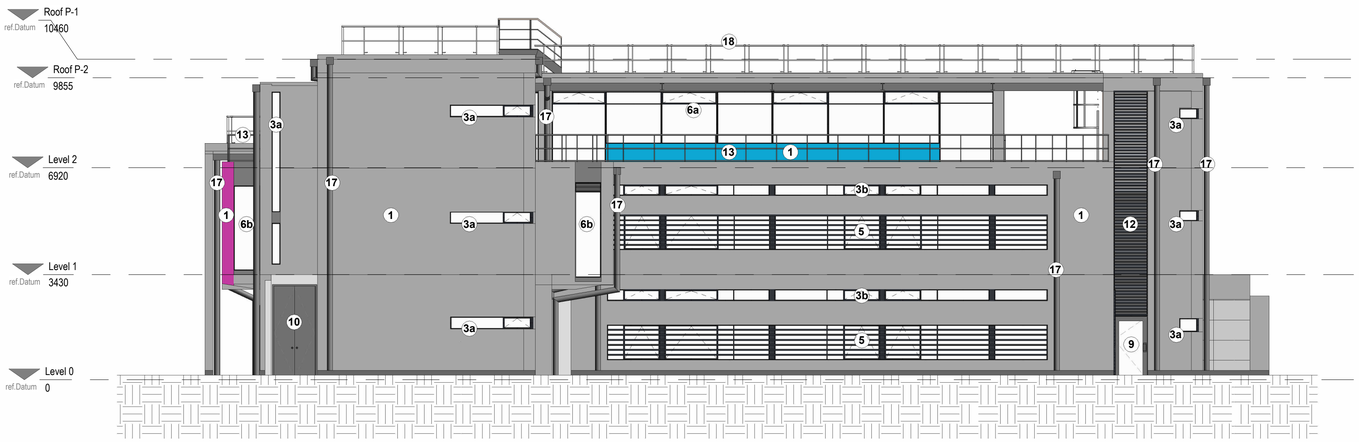

1 Proposed East Elevation
1 : 100

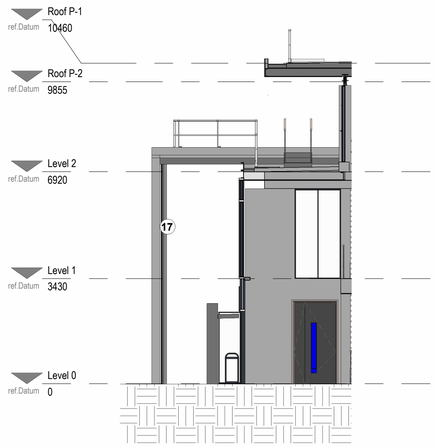

2 Proposed East Entrance
1 : 100

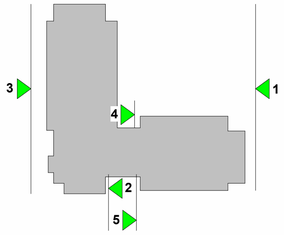

Elevation Location Plan

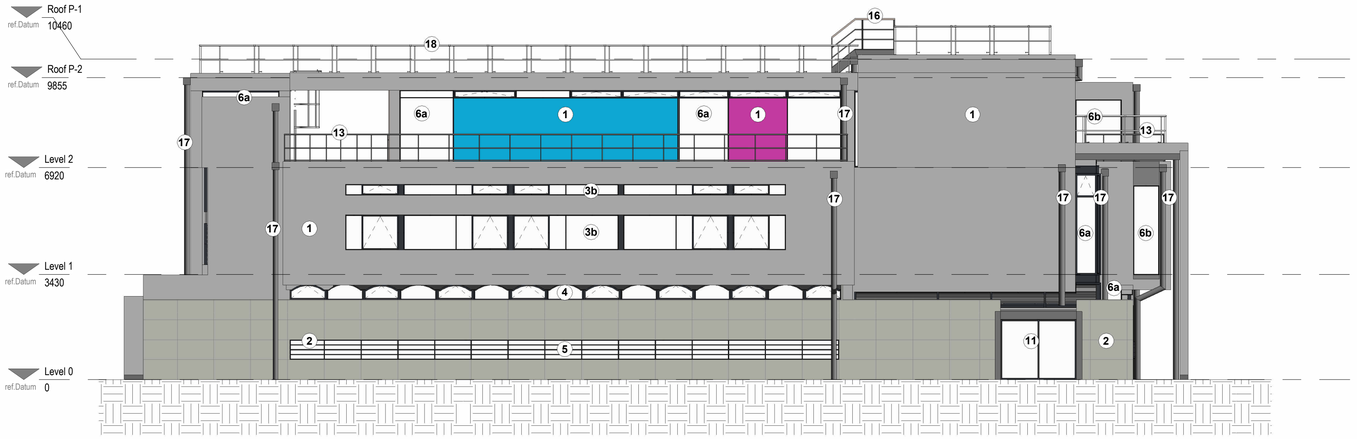

3 Proposed West Elevation
1 : 100

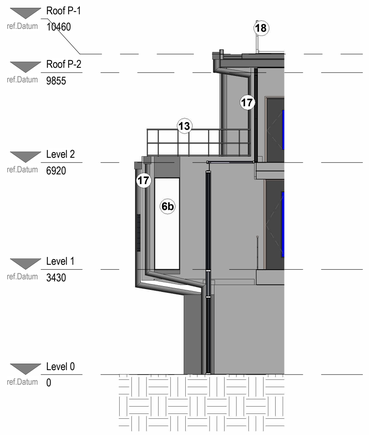

4 Proposed West Back Entrance Side
1 : 100

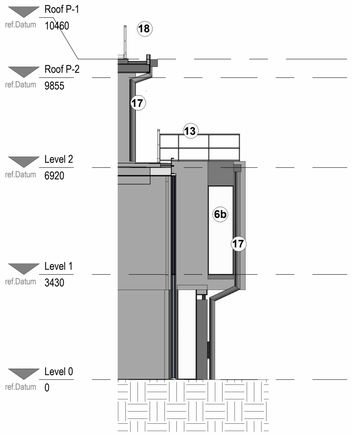

5 Proposed West Entrance
1 : 100

NOTES

1. DO NOT SCALE FROM THIS DRAWING.
2. ALL MEASUREMENTS ARE IN MILLIMETRES UNLESS STATED OTHERWISE.
3. THIS DRAWINGS IS TO BE READ IN CONJUNCTION WITH THE SPECIFICATION AND ALL RELEVANT ARCHITECTURAL, ELECTRICAL, MECHANICAL AND STRUCTURAL DRAWINGS.
4. UNIVERSITY OF MANCHESTER. THIS DRAWING MUST NOT BE REPRODUCED WITHOUT PERMISSION.
5. DIRECTORATE O ESTATES AND FACILITIES TO BE NOTIFIED OF ANY DISCREPANCIES.

Scale Bars TO BE USED ONLY AS GUIDANCE

1:100	mm	1000		3000		5000
1:200	mm		5000		8000	
1:500	M	5		15		25
1:1250	M	10	30		50	70

PROPOSED ALTERATIONS TO EXISTING ELEMENTS AND MATERIALS:

1. Through-coloured painted render, grey, pink and blue
The existing render will be cleaned, made good where damaged, flaking areas of paint removed and re-painted. Appearance and finish to match existing colours.

2. Concrete cladding panel
Existing concrete cladding panels to be cleaned and made good where required. Natural finish retained.

3. Dark grey steel framed windows. Dark grey steel window cill. Openable windows where indicated on elevation.
a) single glazing - all single glazed elements to be replaced with new aluminium double glazed units
b) double glazing - all double glazed units to be replaced with new aluminium double glazed units

4. Dark grey double glazed arched steel framed window. Dark grey steel window cill and flashings. Openable windows where indicated on elevation.
To be replaced with new ALuminium double glazed units

5. Dark grey double glazed steel framed window. Dark grey steel window cill. Dark grey rainscreen louvre panels over window, fixed to steel.
Dark grey rainscreen louvre panels to be repaired and redecorated to match existing.

6. Dark grey steel framed curtain walling to be replaced with Aluminium
a) single glazing
b) double glazing

All window and curtain walling frames and glazing to be replaced to meet current Part L energy efficiency standards.
Proposed System - Smart Aluminium Aitherm 400 system with Heritage Inserts for opening lights to be used to replicate the existing details.
Smart Aluminium MC Wall Curtain walling system with Glazed doors.
All window cills and flashings to be replaced with aluminium to suit existing openings and new details. All structural steel elements to be assessed for repair, refurbished and to be repainted to match existing.
All windows U-Value 1.6
Finish Dark Grey PPC to match existing RAL 7012

7. Glazed double door within curtain walling.
Door will be replaced with single swing automatic door and glazed panel. Access control to meet fire escape requirements.
Smart Aluminium Smart WAII Double Glazed Aluminium doors Leaf and Half or single doors
U-Value 1.8
Finish Dark Grey PPC as window / curtain walling Dark Grey RAL 7012

8. Glazed electrically operated sliding door within curtain walling.
Door will be replaced with single swing automatic door and glazed panel. Access control to meet fire escape requirements and auto operators for access on sensors.
Specification and details as noted in 7

9. Glazed door to escape stairs retained, refurbished and redecorated.

10. Dark grey metal external double door Plant and Stores.
Doors to be refurbished, sanded and re-painted to match existing.

11. Planar single glazing.
Planar glazing feature window box to be replaced with double glazed aluminium Curtain walling infill. frames dark grey as other areas and U-Value 0.16
Roof areas to be replaced with Kingspan Topdek with integrated roof covering to form insulated gutter and roof. U-Value TBC with final design and co-ordination

12. Dark grey louvres.
Dark grey louvres panels to be repaired and redecorated to match existing. Grey RAL 7012

13. Cast iron steel railing 1100mm high.
Railing and connrete copings to be cleaned, repaired and redecorated to match existing. Copings to be removed, cleaned and reinstated / sealed for roof finish and weathering. Colour Black / grey to match existing.

14. Concrete columns.
To be sanded, repaired and repainted to match existing colour.

15. Removal and replacement of first and second floor flat roofs.
On the upper roofs, a new Bauder polymer bitumen warm roof system to be installed, resulting in a minimal height increase of circa 200mm.
New aluminium flashings and cappings to be insatlled in Grey PPC finish to match existing
New fascia boards as required for increased roof finishes to be installed in timber and painted render finish to match existing.
Soffits where damaged by damp ingress to be be replaced with WBP marine ply or cement board finish to match existing and painted white to match existing finishes.
Overall U-Value - 0.18
Roof top Finish in Bauder Grey finish.

On the lower deck terrace levels the existing paving, ballast and insulation / single ply will be removed and a new bitumen polymer roof covering applied. Areas of existing render will be required to be removed and new upstands created for window / door openings to allow for compliant details to be achieved.
New aluminium flashings, cills and cappings to be installed in Grey PPC finish to match existing
Existing copings to parapet will be removed cleaned and re-laid with lapped roofing details.
Specification Bauer Total Roof system - U-Value 0.21
Finish in Bauder Brown finish.
Lesser U-Value is required to maintain fire escape access across the roof / floor and to eliminate increases to parapet, elevation with roof depth maintained and existing railing heights at 1100mm retained. If increased insulation depths can be achieved on strip out of roof these should be reviewed and U-Values adjusted to meet Part L.

16. New Access hatch and ladder to second floor roofs.
New Bilco access hatch and galvanised steel ladder to allow access to second floor roofs for maintenance. Roof hatch to have Simon Voss padlock for security. Self finish product.

17. Siphonic Drainage to Gravity Drainage
Removal of existing defective siphonic drainage and installation of new gravity drainage to all roof areas is required.
Requirements for new external dark grey aluminium downpipes and hoppers to facades for drainage to ground floor level as shown.
New connections to existing drainage system with rodding points and inspection chambers to SE details.
Existing paving and soft landcape to be madeo good with existing finishes re-used or new to match existing Marshalls perfecta concrete paving slabs in natural finish.

18. New collapsible guardrails.
New galvanised steel finish guardrails to the upper roofs as noted on roof plans with required access doors and step overs. Self finish in glavanised steel and weighted system for no penetrations to roof system. These can be deployed during maintenance activities to provide fall protection and folded down afterward to maintain the roof's streamlined appearance.New galvanised steel step overs to be included at roof level changes as noted on plans.

19.New Perimeter upstand.
An additional 150mm upstand is to be added on top of the existing perimeter upstand to accommodate the new roof insulation and ensure compliance with Building Regulations Part L.

20.New additional perimeter steel upstand.
An additional H254mm RSC upstand is to be added on top of the existing H254mm RSC to accommodate the new roof insulation and ensure compliance with Building Regulations Part L.

Rev	Description	Date	By
P01	Planning Issue	22.08.25	MD

MANCHESTER 1824
The University of Manchester

Directorate of Estates and Facilities
Beyer Building
The University of Manchester
Oxford Road
Manchester
M13 9PL

Fairhursts:
Fairhurst Architects
5th Floor
31 Dale Street
Manchester
M1 1EY
+44 (0)161 831 7300

Drawing Status
STAGE 4

Project
University of Manchester- ITS & Computer Science

Building Name
Prospect House

Building No.

Site Name
Booth Street East, M13 9PL

Sub Site Name

Drawing Title
Planning - Proposed East and West Elevations

PM	Drawn	Checked	Authorised
Avison Young	MT	KMD	

Scale @A1	Date	Date	Date
As indicated	22.08.25	22.08.25	

Drawing No.
7808-FA-PH-XX-DR-A-08203

Revision
P01

Original Drawing Paper Size 841 x 594